HYDRAULIC FILTRATION
PRODUCTS



PASSION TO PERFORM

MPFILTRI®

A WORLDWIDE LEADER IN THE FIELD OF HYDRAULIC FILTRATION EQUIPMENT.

Our company started life in 1964, when Bruno Pasotto decided to attempt to cater for the requests of a market still to be fully explored, with the study, design, development, production and marketing of a vast range of filters for hydraulic equipment, capable of satisfying the needs of manufacturers in all sectors. The quality of our products, our extreme competitiveness compared with major international producers and our constant activities of research, design and development has made us a worldwide leader in the field of hydraulic circuit filtering.
Present for over 50 years in the market, we have played a truly decisive role in defining our sector, and by now we are a group capable of controlling our entire chain of production, monitoring all manufacturing processes to guarantee superior quality standards and to provide concrete solutions for the rapidly evolving needs of customers and the market.

MARKET **LEADER**

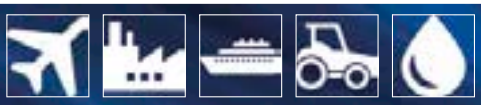

Our work is based on a skillful interaction between advanced technology and fine workmanship, **customizing products according to specific market requests**, focusing strongly on innovation and quality, and following every step in the manufacturing of both standard and special products, fully respecting customer expectations.

Our customer-oriented philosophy, which enables us to satisfy all customer requests **rapidly** and **with personalized products**, makes us a **dynamic and flexible enterprise**. The possibility of constantly controlling and monitoring the entire production process is essential to allow us to guarantee the quality of our products.

WORLDWIDE PRESENCE

Our foreign Branches enable us to offer a diversified range of products that allow us to successfully face the aggressive challenge of international competition, and also to maintain a stable presence at a local level.

The Group boasts **8** **business branches**



TECHNOLOGY

Our constant **quest for excellence in quality and technological innovation** allows us to offer only the best solutions and services for applications in many fields, including general industry, test rigs, lubrication, heavy engineering, renewable energies, naval engineering, offshore engineering, aviation systems, emerging technologies and mobile plant (i.e. tractors, excavators, concrete pumps, platforms).





AND PRODUCTION

Our high level of technological expertise means **we can rely entirely on our own resources, without resorting to external providers.** This in turn enables us to satisfy a growing number of customer requests, also exploiting our constantly updated range of machines and equipment, featuring **fully-automated workstations** capable of **24-hour production**.







SUCTION FILTERS

Flow rates
up to 875 l/min

Mounting:
- Tank immersed
- In-Line
- In tank with shut off valve
- In tank with flooded suction



RETURN FILTERS

Flow rates
up to 3000 l/min

Pressure
up to 20 bar

Mounting:
- In-Line
- Tank top
- In single and duplex designs



RETURN / SUCTION FILTERS

Flow rates
up to 300 l/min

Pressure
up to 80 bar

Mounting:
- In-Line
- Tank top



SPIN-ON FILTERS

Flow rates
up to 365 l/min

Pressure
up to 35 bar

Mounting:
- In-Line
- Tank top



LOW & MEDIUM PRESSURE FILTERS

Flow rates
up to 3000 l/min

Pressure
up to 80 bar

Mounting:
- In-Line
- Parallel manifold version
- In single and duplex designs



HIGH PRESSURE FILTERS

Flow rates
up to 750 l/min

Pressure from 110 bar
up to 560 bar

Mounting:
- In-Line
- Manifold
- In single and duplex designs

PRODUCT RANGE

MP Filtri can offer a vast and articulated range of products for the global market, suitable for all industrial sectors using hydraulic equipment.

This includes filters (suction, return, return/suction, spin-on, pressure, stainless steel pressure) and structural components (motor/pump bell-housings, transmission couplings, damping rings, foot brackets, aluminium tanks, cleaning covers).

We can provide all the skills and solutions required by the modern hydraulics industry to monitor contamination levels and other fluid conditions.

Mobile filtration units and a full range of accessories allow us to supply everything necessary for a complete service in the hydraulic circuits.



STAINLESS STEEL HIGH PRESSURE FILTERS

Flow rates
up to 125 l/min

Pressure from 320 bar
up to 1000 bar

Mounting:
- In-Line
- Manifold
- In single
  and duplex designs



CONTAMINATION MONITORING PRODUCTS

- Online, in-line particle counters
- Off-line bottle sampling products
- Fully calibrated using relevant ISO standards
- A wide range of variants to support fluid types and communication protocols



MOBILE FILTRATION UNITS

Flow rates from 15 l/min
up to 200 l/min



POWER TRANSMISSION PRODUCTS

- Aluminium bell-housings for motors from 0.12 kW to 400 kW
- Couplings in Aluminium Cast Iron - Steel
- Damping rings
- Foot bracket
- Aluminium tanks
- Cleaning covers



TANK ACCESSORIES

- Oil filler and air breather plugs
- Optical and electrical level gauges
- Pressure gauge valve selectors
- Pipe fixing brackets
- Pressure gauges

HYDRAULIC FILTRATION PRODUCTS

page		INTRODUCTION
1	COMPANY	
6	PRODUCT RANGE	
11	CONTAMINATION MANAGEMENT	
22	FILTER SIZING	
24	CORRECTIVE FACTOR	

			up to Q_{max}	
page		SUCTION FILTERS	l/min	gpm
31	STR & MPA - MPM	Submerged suction filter, with bypass or magnetic filter	1000	264
39	SF2 250 - 350	Semi-submerged positive head suction filter, low flow rate	160	42
47	SF2 500	Semi-submerged positive head suction filter, high flow rate	700	185
57	CLOGGING INDICATORS			

			up to P_{max}		up to Q_{max}	
page		RETURN FILTERS	bar	psi	l/min	gpm
63	MPFX	Tank top semi-immersed filter, standard filter element disassembly	8	116	900	238
91	MPLX	Tank top semi-immersed filter, standard filter element disassembly	10	145	1800	476
99	MPTX	Tank top semi-immersed filter, easy filter element disassembly	8	116	300	79
117	MFBX	Bowl assembly	8	116	700	185
125	MPF	Tank top semi-immersed filter, standard filter element disassembly	8	116	900	238
153	MPT	Tank top semi-immersed filter, easy filter element disassembly	8	116	300	79
171	MFB	Bowl assembly	8	116	700	185
179	MPH	Tank top semi-immersed filter, standard filter element disassembly	10	145	3500	925
203	MPI	Tank top semi-immersed filter, standard filter element disassembly	10	145	3500	925
215	FRI	Tank top semi-immersed filter, easy filter element disassembly, it can be used also as in-line filter	20	290	2500	660
231	RF2	Semi-immersed under-head filter, easy filter element disassembly	20	290	615	162
238	CLOGGING INDICATORS					
248	ACCESSORIES					

			up to P_{max}		up to Q_{max}	
page		RETURN / SUCTION FILTERS	bar	psi	l/min	gpm
253	MRSX	Unique TANK TOP filter for mobile machinery, with combined filtration on return and suction to the inlet at the hydrostatic transmissions in closed circuit	10	145	250	66
265	LMP 124 MULTIPORT	Unique IN-LINE filter for mobile machinery, with combined filtration on return and suction to the inlet at the hydrostatic transmissions in closed circuit	80	1160	120	32
273	CLOGGING INDICATORS					

			up to P_{max}		up to Q_{max}	
page		SPIN-ON FILTERS	bar	psi	l/min	gpm
289	MPS	Low pressure filter, available with single cartridge (CS) for in-line or flange mounting or with two cartridge on the same axis on the opposite sides	12	174	365	96
305	MSH	In-line low and medium pressure filter available with single cartridge (CH)	35	508	195	52
311	CLOGGING INDICATORS					

INDEX

			up to P_{max}		up to Q_{max}	
322 page		**LOW & MEDIUM PRESSURE FILTERS**	bar	psi	l/min	gpm
325	LMP 110 - 120 - 123 MULTIPORT	In-line filter with Multiport design for multiple choice connection	80	1160	175	46
341	LMP 210 - 211	In-line low & medium pressure filter, low flow rate	60	870	365	96
351	LMP 400 - 401 & 430 - 431	In-line low & medium pressure filter, high flow rate	60	870	780	206
363	LMP 950 - 951	In-line filter, available with 2 and up to 6 different heads	30	435	2400	634
371	LMP 952 - 953 - 954	In-line low pressure filter specifically designed to be mounted in series	25	363	4500	1189
383	LMD 211	In-line duplex medium pressure filter	60	870	200	53
391	LMD 400 - 401 & 431	In-line duplex low pressure filter	16	232	600	159
407	LMD 951	In-line duplex filter, available with 2 up to 6 different heads	16	232	1200	317
415		Filter elements designed according to DIN 24550				
417	LDP - LDD	In-line and duplex medium pressure filter	60	870	360	95
427	LMP 900 - 901	In-line low pressure filter	30	435	2000	528
435	LMP 902 - 903	In-line filter specifically designed to be mounted in series	20	290	3000	793
444	CLOGGING INDICATORS					
450	ACCESSORIES					

			up to P_{max}		up to Q_{max}	
452 page		**HIGH PRESSURE FILTERS**	bar	psi	l/min	gpm
455	FMP 039	Filter high pressure, low flow rate applications	110	1595	80	21
463	FMP	Filter high pressure, high flow rate applications	320	4641	500	132
475	FHP	Typical high pressure filter for mobile applications, high flow rate	420	6092	630	166
493	FMM	Typical high pressure filter for mobile applications, low flow rate	420	6092	300	79
503	HPB	Pressure filter kits for integration in control manifolds	420	6092	300	79
513	FHA 051	Filter optimized for use in high pressure operating systems, low flow rate	560	8122	150	40
521	FHM	High pressure filter with intermediate manifold construction	320	4641	400	106
539	FHB	High pressure for block mounting	320	4641	485	128
553	FHF 325	In-line manifold top mounting	350	5076	550	145
563	FHD	In-line duplex high pressure filter	350	5076	250	66
576	CLOGGING INDICATORS					

			up to P_{max}		up to Q_{max}	
584 page		**STAINLESS STEEL HIGH PRESSURE FILTERS**	bar	psi	l/min	gpm
587	FZP	In-line pressure filter with threaded mount	420	6092	160	42
597	FZH	In-line pressure filter with threaded mount for higher pressure	700	10153	80	21
607	FZX	In-line pressure filter with threaded mount up to 1000 bar	1000	14504	10	3
615	FZM	Manifold top mounting	320	4641	70	18
623	FZB	Manifold side mounting	320	4641	70	18
631	FZD	Duplex pressure filter for continuous operation requirements	350	5076	60	16
641	CLOGGING INDICATORS					

646 page		**CLOGGING INDICATORS**
649	QUICK REFERENCE GUIDE	

CONTAMINATION MANAGEMENT

INDEX

		Page
1	HYDRAULIC FLUIDS	12
2	FLUIDS CONTAMINATION	12
3	EFFECTS OF CONTAMINATION ON HYDRAULIC COMPONENTS	12
4	MEASURING THE SOLID CONTAMINATION LEVEL	13
5	FILTRATION TECHNOLOGIES	16
6	RECOMMENDED CONTAMINATION CLASSES	17
7	TYPES OF FILTERS	17
8	FILTER SIZING PARAMETERS	18
9	APPLICABLE STANDARDS FOR FILTER DEVELOPMENT	18
10	WATER IN HYDRAULIC AND LUBRICATING FLUIDS	19
11	THE ANTI-STATIC FILTERS zerospark	20

1 HYDRAULIC FLUIDS

The fluid is the vector that transmits power, energy within an oleodynamic circuit. In addition to transmitting energy through the circuit, it also performs additional functions such as lubrication, protection and cooling of the surfaces.
The classification of fluids used in hydraulic systems is coded in many regulatory references, different Standards.

The most popular classification criterion divides them into the following families:
- MINERAL OILS
  Commonly used oil deriving fluids.

- FIRE RESISTANT FLUIDS
  Fluids with intrinsic characteristics of incombustibility or high flash point.

- SYNTHETIC FLUIDS
  Modified chemical products to obtain specific optimized features.

- ECOLOGICAL FLUIDS
  Synthetic or vegetable origin fluids with high biodegradability characteristics.

The choice of fluid for an hydraulic system must take into account several parameters.
These parameters can adversely affect the performance of an hydraulic system, causing delay in the controls, pump cavitation, excessive absorption, excessive temperature rise, efficiency reduction, increased drainage, wear, jam/block or air intake in the plant.

The main properties that characterize hydraulic fluids and affect their choice are:
- DYNAMIC VISCOSITY
  It identifies the fluid's resistance to sliding due to the impact of the particles forming it.

- CINEMATIC VISCOSITY
  It is a widespread formal dimension in the hydraulic field.
  It is calculated with the ratio between the dynamic viscosity and the fluid density.
  Cinematic viscosity varies with temperature and pressure variations.

- VISCOSITY INDEX
  This value expresses the ability of a fluid to maintain viscosity when the temperature changes.
  A high viscosity index indicates the fluid's ability to limit viscosity variations by varying the temperature.

- FILTERABILITY INDEX
  It is the value that indicates the ability of a fluid to cross the filter materials.
  A low filterability index could cause premature clogging of the filter material.

- WORKING TEMPERATURE
  Working temperature affects the fundamental characteristics of the fluid.
  As already seen, some fluid characteristics, such as cinematic viscosity, vary with the temperature variation.
  When choosing a hydraulic oil, must therefore be taken into account of the environmental conditions in which the machine will operate.

- COMPRESSIBILITY MODULE
  Every fluid subjected to a pressure contracts, increasing its density.
  The compressibility module identifies the increase in pressure required to cause a corresponding increase in density.

- HYDROLYTIC STABILITY
  It is the characteristic that prevents galvanic pairs that can cause wear in the plant/system.

- ANTIOXIDANT STABILITY AND WEAR PROTECTION
  These features translate into the capacity of a hydraulic oil to avoid corrosion of metal elements inside the system.

- HEAT TRANSFER CAPACITY
  It is the characteristic that indicates the capacity of hydraulic oil to exchange heat with the surfaces and then cool them.

2 FLUID CONTAMINATION

Whatever the nature and properties of fluids, they are inevitably subject to contamination. Fluid contamination can have two origins:

- INITIAL CONTAMINATION
  Caused by the introduction of contaminated fluid into the circuit, or by incorrect storage, transport or transfer operations.

- PROGRESSIVE CONTAMINATION
  Caused by factors related to the operation of the system, such as metal surface wear, sealing wear, oxidation or degradation of the fluid, the introduction of contaminants during maintenance, corrosion due to chemical or electrochemical action between fluid and components, cavitation.
  The contamination of hydraulic systems can be of different nature:

- SOLID CONTAMINATION
  For example rust, slag, metal particles, fibers, rubber particles, paint particles
- or additives

- LIQUID CONTAMINATION
  For example, the presence of water due to condensation or external infiltration or acids

- GASEOUS CONTAMINATION
  For example, the presence of air due to inadequate oil level in the tank, drainage in suction ducts, incorrect sizing of tubes or tanks.

3 EFFECTS OF CONTAMINATION ON HYDRAULIC COMPONENTS

Solid contamination is recognized as the main cause of malfunction, failure and early degradation in hydraulic systems. It is impossible to delete it completely, but it can be effectively controlled by appropriate devices.

CONTAMINATION IN PRESENCE OF LARGE TOLERANCES



CONTAMINATION IN PRESENCE OF NARROW TOLERANCES



Solid contamination mainly causes surface damage and component wear.

- ABRASION OF SURFACES
  Cause of leakage through mechanical seals, reduction of system performance, failures.

- SURFACE EROSION
  Cause of leakage through mechanical seals, reduction of system performance, variation in adjustment of control components, failures.

- ADHESION OF MOVING PARTS
  Cause of failure due to lack of lubrication.

- DAMAGES DUE TO FATIGUE
  Cause of breakdowns and components breakdown.

ABRASION



EROSION



ADHESION



FATIGUE



Liquid contamination mainly results in decay of lubrication performance and protection of fluid surfaces.

DISSOLVED WATER

- INCREASING FLUID ACIDITY
  Cause of surface corrosion and premature fluid oxidation

- GALVANIC COUPLE AT HIGH TEMPERATURES
  Cause of corrosion

FREE WATER - ADDITIONAL EFFECTS

- DECAY OF LUBRICANT PERFORMANCE
  Cause of rust and sludge formation, metal corrosion and increased solid contamination

- BATTERY COLONY CREATION
  Cause of worsening in the filterability feature

- ICE CREATION AT LOW TEMPERATURES
  Cause damage to the surface

- ADDITIVE DEPLETION
  Free water retains polar additives

Gaseous contamination mainly results in decay of system performance.

- CUSHION SUSPENSION
  Cause of increased noise and cavitation.

- FLUID OXIDATION
  Cause of corrosion acceleration of metal parts.

- MODIFICATION OF FLUID PROPERTIES
  (COMPRESSIBILITY MODULE, DENSITY, VISCOSITY)
  Cause of system's reduction of efficiency and of control.
  It is easy to understand how a system without proper contamination management is subject to higher costs than a system that is provided.

- MAINTENANCE
  Maintenance activities, spare parts, machine stop costs

- ENERGY AND EFFICIENCY
  Efficiency and performance reduction due to friction, drainage, cavitation.

4 MEASURING THE SOLID CONTAMINATION LEVEL

The level of contamination of a system identifies the amount of contaminant contained in a fluid.
This parameter refers to a unit volume of fluid.
The level of contamination may be different at different points in the system.
From the information in the previous paragraphs it is also apparent that the level of contamination is heavily influenced by the working conditions of the system, by its working years and by the environmental conditions.

What is the size of the contaminating particles that we must handle in our hydraulic circuit?



HUMAN HAIR
(75 µm)

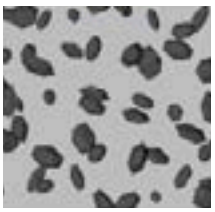

MINIMUM DIMENSION VISIBLE HUMAN EYES
(40 µm)

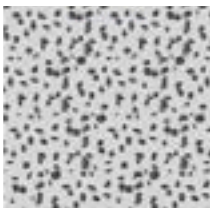

TYPICAL CONTAMINANT DIMENSION IN A HYDRAULIC CIRCUIT
(4 - 14 µm)

Contamination level analysis is significant only if performed with a uniform and repeatable method, conducted with standard test methods and suitably calibrated equipment.
To this end, ISO has issued a set of standards that allow tests to be conducted and express the measured values in the following ways.

- GRAVIMETRIC LEVEL - ISO 4405

The level of contamination is defined by checking the weight of particles collected by a laboratory membrane. The membrane must be cleaned, dried and desiccated, with fluid and conditions defined by the Standard.
The volume of fluid is filtered through the membrane by using a suitable suction system. The weight of the contaminant is determined by checking the weight of the membrane before and after the fluid filtration.



CLEAN
MEMBRANE



CONTAMINATED
MEMBRANE

- CUMULATIVE DISTRIBUTION OF THE PARTICLES SIZE - ISO 4406

The level of contamination is defined by counting the number of particles of certain dimensions per unit of volume of fluid. Measurement is performed by Automatic Particle Counters (APC).
Following the count, the contamination classes are determined, corresponding to the number of particles detected in the unit of fluid.
The most common classification methods follow ISO 4406 and SAE AS 4059 (Aerospace Sector) regulations.
NAS 1638 is still used although obsolete.

Classification example according to ISO 4406

The code refers to the number of particles of the same size or greater than 4, 6 or 14 µm in a 1 ml fluid.

Class	Number of particles per ml	
	Over	Up to
28	1 300 000	2 500 000
27	640 000	1 300 000
26	320 000	640 000
25	160 000	320 000
24	80 000	160 000
23	40 000	80 000
22	20 000	40 000
21	10 000	20 000
20	5 000	10 000
19	2 500	5 000
18	1 300	2 500
17	640	1 300
16	320	640
15	160	320
14	80	160
13	40	80
12	20	40
11	10	20
10	5	10
9	2.5	5
8	1.3	2.5
7	0.64	1.3
6	0.32	0.64
5	0.16	0.32
4	0.08	0.16
3	0.04	0.08
2	0.02	0.04
1	0.01	0.02
0	0	0.01

> 4 $\mu m_{(c)}$ = 350 particles
> 6 $\mu m_{(c)}$ = 100 particles
> 14 $\mu m_{(c)}$ = 25 particles
16 / 14 / 12

ISO 4406:2017 Cleanliness Code System

Microscope counting examines the particles differently to APCs and the code is given with two scale numbers only.
These are at 5 µm and 15 µm equivalent to the 6 $\mu m_{(c)}$ and 14 $\mu m_{(c)}$ of APCs.

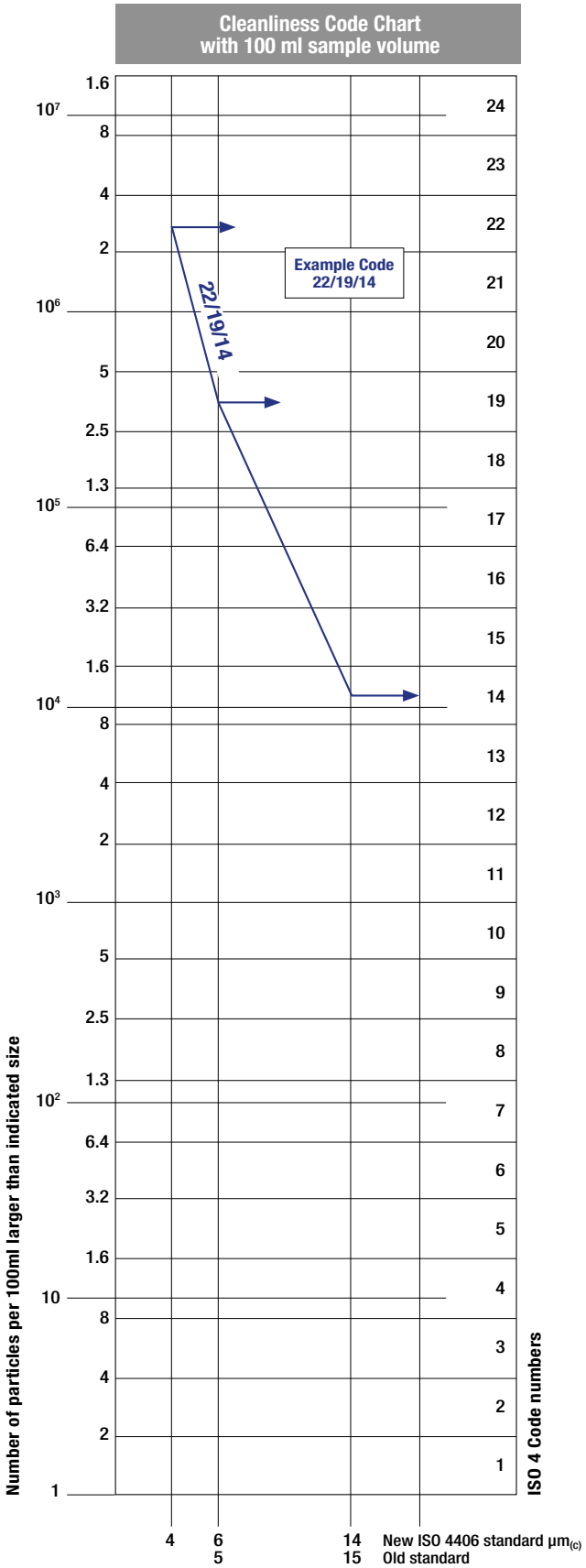

- CUMULATIVE DISTRIBUTION OF THE PARTICLES SIZE - SAE AS 4059-1 and SAE AS 4059-2

Classification example according to SAE AS 4059-1 and SAE AS 4059-2

The code, prepared for the aerospace industry, is based on the size, quantity, and particle spacing in a 100 ml fluid sample. The contamination classes are defined by numeric codes, the size of the contaminant is identified by letters (A-F).

It can be made a differential measurement (Table 1) or a cumulative measurement (Table 2)

Table 1 - Class for differential measurement

Class	Dimension of contaminant				
	6 - 14 µm(c)	14 - 21 µm(c)	21 - 38 µm(c)	38 - 70 µm(c)	>70 µm(c)
00	125	22	4	1	0
0	250	44	8	2	0
1	500	89	16	3	1
2	1 000	178	32	6	1
3	2 000	356	63	11	2
4	4 000	712	126	22	4
5	8 000	1 425	253	45	8
6	16 000	2 850	506	90	16
7	32 000	5 700	1 012	180	32
8	64 000	11 400	2 025	360	64
9	128 000	22 800	4 050	720	128
10	256 000	45 600	8 100	1 440	256
11	512 000	91 200	16 200	2 880	512
12	1 024 000	182 400	32 400	5 760	1 024

6 - 14 µm(c) = 15 000 particles
14 - 21 µm(c) = 2 200 particles
21 - 38 µm(c) = 200 particles
38 - 70 µm(c) = 35 particles
> 70 µm(c) = 3 particles
Class 6

Table 2 - Class for cumulative measurement

Class	Dimension of contaminant					
	>4 µm(c) A	>6 µm(c) B	>14 µm(c) C	>21 µm(c) D	>38 µm(c) E	>70 µm(c) F
000	195	76	14	3	1	0
00	390	152	27	5	1	0
0	780	304	54	10	2	0
1	1 560	609	109	20	4	1
2	3 120	1 217	217	39	7	1
3	6 250	2 432	432	76	13	2
4	12 500	4 864	864	152	26	4
5	25 000	9 731	1 731	306	53	8
6	50 000	19 462	3 462	612	106	16
7	100 000	38 924	6 924	1 224	212	32
8	200 000	77 849	13 849	2 449	424	64
9	400 000	155 698	27 698	4 898	848	128
10	800 000	311 396	55 396	9 796	1 696	256
11	1 600 000	622 792	110 792	19 592	3 392	512
12	3 200 000	1 245 584	221 584	39 184	6 784	1 024

> 4 µm(c) = 45 000 particles
> 6 µm(c) = 15 000 particles
> 14 µm(c) = 1 500 particles
> 21 µm(c) = 250 particles
> 38 µm(c) = 15 particles
> 70 µm(c) = 3 particle
Class from 2F to 4E

- CLASSES OF CONTAMINATION ACCORDING TO NAS 1638 (January 1964)

The NAS system was originally developed in 1964 to define contamination classes for the contamination contained within aircraft components.
The application of this standard was extended to industrial hydraulic systems simply because nothing else existed at the time.
The coding system defines the maximum numbers permitted of 100ml volume at various size intervals (differential counts) rather than using cumulative counts as in ISO 4406:1999. Although there is no guidance given in the standard on how to quote the levels, most industrial users quote a single code which is the highest recorded in all sizes and this convention is used on MP Filtri APC's.

The contamination classes are defined by a number (from 00 to 12) which indicates the maximum number of particles per 100 ml, counted on a differential basis, in a given size bracket.

Size Range Classes (in microns)

Maximum Contamination Limits per 100 ml					
Class	5 - 15	15 - 25	25 - 50	50 - 100	>100
00	125	22	4	1	0
0	250	44	8	2	0
1	500	89	16	3	1
2	1 000	178	32	6	1
3	2 000	356	63	11	2
4	4 000	712	126	22	4
5	8 000	1 425	253	45	8
6	16 000	2 850	506	90	16
7	32 000	5 700	1 012	180	32
8	64 000	11 400	2 025	360	64
9	128 000	22 800	4 050	720	128
10	256 000	45 600	8 100	1 440	256
11	512 000	91 200	16 200	2 880	512
12	1 024 000	182 400	32 400	5 760	1 024

5 - 15 µm(c) = 42 000 particles
15 - 25 µm(c) = 2 200 particles
25 - 50 µm(c) = 150 particles
50 - 100 µm(c) = 18 particles
> 100 µm(c) = 3 particles
Class NAS 8

- CUMULATIVE DISTRIBUTION OF THE PARTICLES SIZE - ISO 4407

The level of contamination is defined by counting the number of particles collected by a laboratory membrane per unit of fluid volume. The measurement is done by a microscope.
The membrane must be cleaned, dried and desiccated, with fluid and conditions defined by the Standard. The fluid volume is filtered through the membrane, using a suitable suction system.
The level of contamination is identified by dividing the membrane into a predefined number of areas and by counting the contaminant particles using a suitable laboratory microscope.



MICROSCOPE CONTROL AND MEASUREMENT

COMPARISON PHOTOGRAPH'S

1 graduation = 10µm



ISO 4406:1999	Class 16/14/11	Class 22/20/17
SAE AS4059E Table 1	Class 5	Class 11
NAS 1638	Class 5	Class 11
SAE AS4059E Table 2	Class 6A/5B/5C	Class 12A/11B/11C

- CLEANLINESS CODE COMPARISON

Although ISO 4406:2017 standard is being used extensively within the hydraulics industry other standards are occasionally required and a comparison may be requested. The table below gives a very general comparison but often no direct comparison is possible due to the different classes and sizes involved.

ISO 4406:2017	SAE AS4059 Table 2	SAE AS4059 Table 1	NAS 1638
> 4 $\mu m_{(c)}$ 6 $\mu m_{(c)}$ 14 $\mu m_{(c)}$	> 4 $\mu m_{(c)}$ 6 $\mu m_{(c)}$ 14 $\mu m_{(c)}$	4-6 6-14 14-21 21-38 38-70 >70	5-15 15-25 25-50 50-100 >100
23 / 21 / 18	13A / 12B / 12C	12	12
22 / 20 / 17	12A / 11B / 11C	11	11
21 / 19 / 16	11A / 10B / 10C	10	10
20 / 18 / 15	10A / 9B / 9B	9	9
19 / 17 / 14	9A / 8B / 8C	8	8
18 / 16 / 13	8A / 7B / 7C	7	7
17 / 15 / 12	7A / 6B / 6C	6	6
16 / 14 / 11	6A / 5B / 5C	5	5
15 / 13 / 10	5A / 4B / 4C	4	4
14 / 12 / 09	4A / 3B / 3C	3	3

5 FILTRATION TECHNOLOGIES

Various mechanisms such as mechanical stoppage, magnetism, gravimetric deposit, or centrifugal separation can be used to reduce the level of contamination.
The mechanical stoppage method is most effective and can take place in two ways:

- SURFACE FILTRATION
  It is by direct interception. The filter prevents particles larger than the pores from continuing in the plant / system. Surface filters are generally manufactured with metal canvases or meshes.

- DEPTH FILTERING
  Filters are constructed by fiber interlacing. Such wraps form pathways of different shapes and sizes in which the particles remain trapped when they find smaller apertures than their diameter.
  Depth filters are generally produced with papers impregnated with phenolic resins, metal fibers or inorganic fibers.
  In inorganic fiber filtration, commonly called microfibre, the filtering layers are often overlapped in order to increase the ability to retain the contaminant.

WIRE MESH FILTRATION

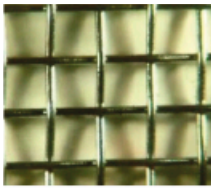

PAPER FILTRATION

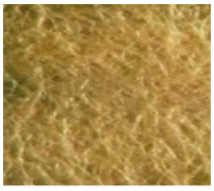

MICROFIBER FILTRATION

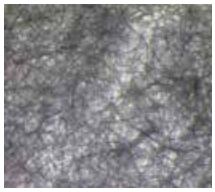

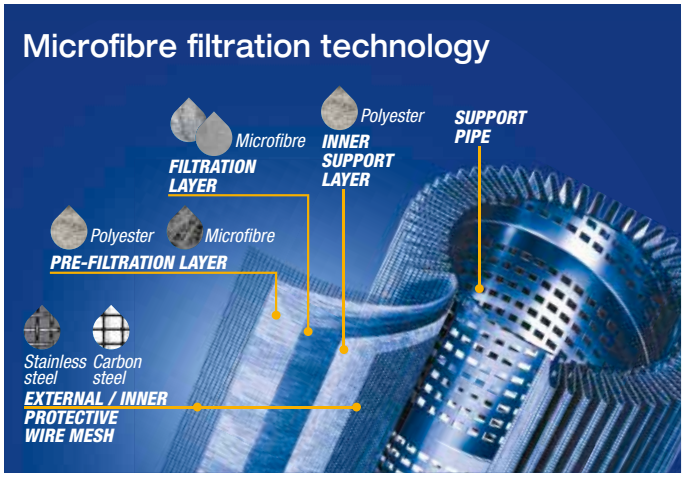

The filtration efficiency of metallic mesh filtrations is defined as the maximum particle size that can pass through the meshes of the filtering grid.
The efficiency of microfibre and paper filtration ($\beta_{x(c)}$) is defined through a lab test called Multipass Test. The efficiency value ($\beta_{x(c)}$) is defined as the ratio between the number of particles of certain dimensions detected upstream and downstream of the filter.

$$\frac{\text{Upstream particles number} > X\ \mu m_{(c)}}{\text{Downstream particles number} > X\ \mu m_{(c)}} = \beta_{x(c)}$$

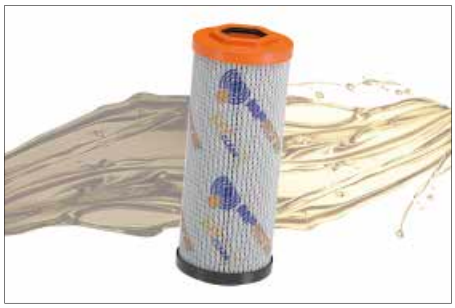

Value ($\beta_{x(c)}$)	2	10	75	100	200	1000
Efficiency	50%	90%	98.7%	99%	99.5%	99.9%

Test conditions, such as type of fluid to be used (MIL-H-5606), type of contaminant to be used (ISO MTD), fluid viscosity, test temperature, are determined by ISO 16889.
In addition to the filtration efficiency value during the Multipass test, other important features, such as filtration stability (β stability) and dirt holding capacity (DHC), are also tested.
Poor filtration stability is the cause of the filtering quality worsening as the filter life rises. Low dirt holding capacity causes a reduction in the life of the filter.

Filtration ISO Standard Comparison		
$\beta_{x(c)} > 1000$ ISO 16889	$\beta_x > 200$ ISO 4572	MP Filtri Filter media code
5 $\mu m_{(c)}$	3 µm	A03
7 $\mu m_{(c)}$	6 µm	A06
10 $\mu m_{(c)}$	10 µm	A10
16 $\mu m_{(c)}$	18 µm	A16
21 $\mu m_{(c)}$	25 µm	A25

6 RECOMMENDED CONTAMINATION CLASSES

Any are the nature and the properties of fluids, they are inevitably subject to contamination. The level of contamination can be managed by using special components called filters.
Hydraulic components builders, knowing the problem of contamination, recommend the filtration level appropriate to the use of their products.

Example of recommended contamination levels for pressures below 140 bar.

Piston pumps with fixed flow rate	•					
Piston pumps with variable flow rate			•			
Vane pumps with fixed flow rate		•				
Vane pumps with variable flow			•			
Engines	•					
Hydraulic cylinders	•					
Actuators					•	
Test benches						•
Check valve	•					
Directional valves	•					
Flow regulating valves	•					
Proportional valves				•		
Servo-valves					•	
Flat bearings			•			
Ball bearings				•		
ISO 4406 CODE	20/18/15	19/17/14	18/16/13	17/15/12	16/14/11	15/13/10
Recommended filtration $\beta_{x(c)} \geq 1.000$	$\beta_{20(c)}$ >1000	$\beta_{15(c)}$ >1000	$\beta_{10(c)}$ >1000	$\beta_{7(c)}$ >1000	$\beta_{7(c)}$ >1000	$\beta_{5(c)}$ >1000

The common classification of filters is determined by their position in the plant.

7 TYPES OF FILTERS

Suction filters
They are positioned before the pump and are responsible for protecting the pump from dirty contaminants. It also provides additional flow guidance to the pump suction line.
Being subject to negligible working pressures are manufactured with simple and lightweight construction.
They are mainly produced with gross grade surface filtrations, mainly 60 ÷ 125 µm.
They can be equipped with a magnetic filter for retaining ferrous particles.
They are generally placed under the fluid head to take advantage of the piezometric thrust of the fluid and reduce the risk of cavitation.

There are two types of suction filters:
- IMMERSION FILTERS
  Simple filter element screwed on the suction pipe

- FILTERS WITH CONTAINER
  Container filters that are more bulky, but provide easier maintenance of the tank

Delivery (or Pressure) filters
They are positioned between the pump and most sensitive regulating and controlling components, such as servo valves or proportional valves, and are designed to ensure the class of contamination required by the components used in the circuit.
Being subjected to high working pressures are manufactured with more robust and articulated construction. In particular situations of corrosive environments or aggressive fluids can be made of stainless steel.
They are mainly produced with filtering depths of 3 ÷ 25 µm.
They can be manufactured with in-line connections, with plate or flange connections or directly integrated into the circuit control blocks / manifolds.
They can also be manufactured in duplex configuration to allow the contaminated section to be maintained even when the plant / system is in operation without interruption of the working cycle.

Return filters
They are positioned on the return line to the tank and perform the task of filtering the fluid from particles entering the system from the outside or generated by the wear of the components.
They are generally fixed to the reservoir (for this reason also called top tank mounted), positioned semi-immersed or completely immersed.
The positioning of the return filters must guarantee in all operating conditions that the fluid drainage takes place in immersed condition; this is to avoid creating foams in the tank that can cause malfunctions or cavitation in the pumps.
For the sizing of the return filters, account must be taken of the presence of accumulators or cylinders that can make the return flow considerably greater than the pump suction flow rate.
Being subject to contained working pressures are manufactured with simple and lightweight construction.
Normally it is possible to extract the filter element without disconnecting the filter from the rest of the system.

Combined filters
They are designed to be applied to systems with two or more circuits. They are commonly used in hydrostatic transmission machines where they have a dual filtration function of the return line and suction line of the hydrostatic transmission pump.
The filter is equipped with a valve that keeps the 0.5 bar pressure inside the filter. A portion of the fluid that returns to the tank is filtered by the return filter element, generally produced with absolute filtration, and returns to the transmission booster pump.
Only excess fluid returns to the tank through the valve.
The internal pressure of the filter and the absolute filtration help to avoid the cavitation phenomenon inside the pump.

Off-line filters
They are generally used in very large systems / plants, placed in a closed circuit independent from the main circuit. They remain in operation regardless of the operation of the main circuit and are crossed by a constant flow rate.
They can also be manufactured in duplex configuration to allow the contaminated section to be maintained even when the unit is in operation without interruption of the work cycle.

Venting filters
During the operation of the plants, the fluid level present in the reservoir changes continuously.
The result of this continuous fluctuation is an exchange of air with the outside environment.
The venting filter function, positioned on the tank, is to filter the air that enters the tank to compensate for fluid level variations.

8 FILTER SIZING PARAMETERS

The choice of the filter system for an hydraulic system is influenced by several factors.
It is necessary to consider the characteristics of the various components present in the plant and their sensitivity to contamination.

It is also necessary to consider all the tasks that the filter will have to do within the plant:
- FLUID PROTECTION FROM CONTAMINATION
- PROTECTION OF OLEODYNAMIC COMPONENTS SENSITIVE TO CONTAMINATION
- PROTECTION OF OLEODYNAMIC PLANTS FROM ENVIRONMENTAL WASTE
- PROTECTION OF OLEODYNAMIC PLANTS FROM CONTAMINATION CAUSED BY COMPONENTS' FAILURES

The advantages of proper positioning and sizing of the filters are
- MORE RELIABILITY OF THE SYSTEM
- LONGER LIFE OF THE FLUID COMPONENTS
- REDUCTION OF STOP TIME
- REDUCTION OF FAILURE CASUALITIES

Each hydraulic filter is described by general features that identify the possibility of use in different applications.

- *MAXIMUM WORKING PRESSURE (Pmax)*
  The maximum working pressure of the filter must be greater than or equal to the pressure of the circuit section in which it will be installed.

- *PRESSURE DROP (ΔP)*
  The pressure drop depends on a number of factors, such as the working circuit temperature, the fluid viscosity, the filter element cleaning condition.

- *WORKING TEMPERATURE (T)*
  The working temperature deeply affect the choice of materials. Excessively high or low temperatures may adversely affect the strength of the materials or the characteristics of the seals.

- *FILTRATION EFFICIENCY (%) / FILTRATION RATIO ($\beta_{x(c)}$)*
  Filtration efficiency is the most important parameter to consider when selecting a filter.
  When choosing the filtration performances, the needs of the most sensitive components in the system must be considered.

- *FLUID TYPE*
  The type of fluid influences the choice of filters in terms of compatibility and viscosity. It is always mandatory to check the filterability.

- *PLACEMENT IN THE PLANT*
  The position of the filter in the system conditions the efficiency of all filter performances.

9 APPLICABLE STANDARDS FOR FILTER DEVELOPMENT

In order to obtain unique criteria for development and verification of the filters performance, specific regulations for the filters and filter elements testing have been issued by ISO. These norms describe the target, the methodology, the conditions and the presentation methods for the test results.

ISO 2941

Hydraulic fluid power -- Filter elements -- Verification of collapse/burst pressure rating

This Standard describes the method for testing the collapse / burst resistance of the filter elements.
The test is performed by crossing the contaminated fluid filter element at a predefined flow rate. The progressive clogging of the filter element, determined by contamination, causes an increase in differential pressure.

ISO 2942

Hydraulic fluid power -- Filter elements -- Verification of fabrication integrity and determination of the first bubble point

This Standard describes the method to verify the integrity of the assembled filter elements.
It can be used to verify the quality of the production process or the quality of the materials by verifying the pressure value of the first bubble point.

ISO 2943

Hydraulic fluid power -- Filter elements -- Verification of material compatibility with fluids

This Standard describes the method to verify the compatibility of materials with certain hydraulic fluids.
The test is carried out by keeping the element (the material sample) immersed in the fluid under high or low temperature conditions for a given period of time and verifying the retention of the characteristics.

ISO 3723

Hydraulic fluid power -- Filter elements -- Method for end load test

This Standard describes the method for verifying the axial load resistance of the filter elements.
After performing the procedure described in ISO 2943, the designed axial load is applied to the filter element. To verify the test results, then the test described in ISO 2941 is performed.

ISO 3968

Hydraulic fluid power -- Filters -- Evaluation of differential pressure versus flow characteristics

This Standard describes the method for checking the pressure drop across the filter.
The test is carried out by crossing the filter from a given fluid and by detecting upstream and downstream pressures.
Some of the parameters defined by the Standard are the fluid, the test temperature, the size of the tubes, the position of the pressure detection points.

ISO 16889

Hydraulic fluid power -- Filters -- Multi-pass method for evaluating filtration performance of a filter element

This Standard describes the method to check the filtration characteristics of the filter elements.
The test is performed by constant introduction of contaminant (ISO MTD).
The characteristics observed during the test are the filtration efficiency and the dirty holding capacity related to the differential pressure.

ISO 23181

Hydraulic fluid power -- Filter elements -- Determination of resistance to flow fatigue using high viscosity fluid

This Standard describes the method for testing the fatigue resistance of the filter elements.
The test is carried out by subjecting the filter to continuous flow variations, thus differential pressure, using a high viscosity fluid.

ISO 11170

Hydraulic fluid power -- Sequence of tests for verifying performance characteristics of filter elements

The Standard describes the method for testing the performance of filter elements. The protocol described by the regulations provides the sequence of all the tests described above in order to verify all the working characteristics (mechanical, hydraulic and filtration).

ISO 10771-1

Hydraulic fluid power -- Fatigue pressure testing of metal pressure-containing envelopes -- Test method

This Standard describes the method to check the resistance of the hydraulic components with pulsing pressure.
It can be applied to all metal components (excluding tubes) subject to cyclic pressure used in the hydraulic field.

10 WATER IN HYDRAULIC AND LUBRICATING FLUIDS

Water Content

In mineral oils and non aqueous resistant fluids water is undesirable. Mineral oil usually has a water content of 50-300 ppm (@40°C) which it can support without adverse consequences.
Once the water content exceeds about 300ppm the oil starts to appear hazy. Above this level there is a danger of free water accumulating in the system in areas of low flow. This can lead to corrosion and accelerated wear.
Similarly, fire resistant fluids have a natural water which may be different to mineral oil.

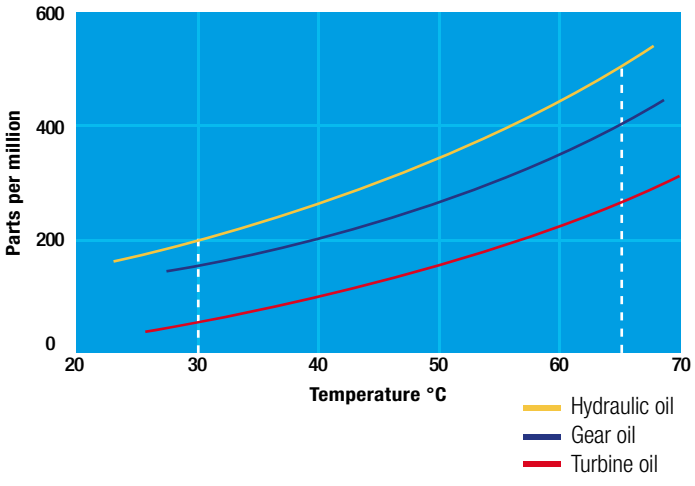

Saturation Levels

Since the effects of free (also emulsified) water is more harmful than those of dissolved water, water levels should remain well below the saturation point.

However, even water in solution can cause damage and therefore every reasonable effort should be made to keep saturation levels as low as possible. There is no such thing as too little water. As a guideline, we recommend maintaining saturation levels below 50% in all equipment.

TYPICAL WATER SATURATION LEVEL FOR NEW OILS
Examples:
Hydraulic oil @ 30°C = 200ppm = 100% saturation
Hydraulic oil @ 65°C = 500ppm = 100% saturation

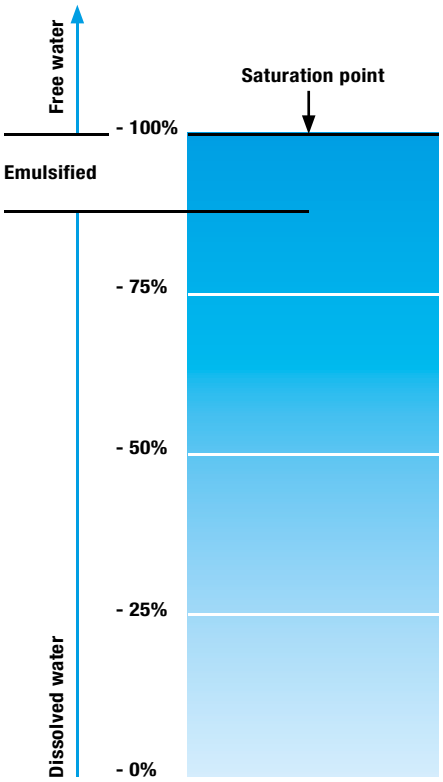

Water absorber

Water is present everywhere, during storage, handling and servicing.

MP Filtri filter elements feature an absorbent media which protects hydraulic systems from both particulate and water contamination.
MP Filtri's filter element technology is available with inorganic microfiber media with a filtration rating 25 µm (therefore identified with media designation WA025), providing absolute filtration of solid particles to $\beta_{x(c)} = 1000$.
Absorbent media is made by water absorbent fibres which increase in size during the absorption process.
Free water is thus bonded to the filter media and completely removed from the system (it cannot even be squeezed out).

Filter Media



Fabric that absorbs water

Absorber media layer



The Filter Media has absorbed water

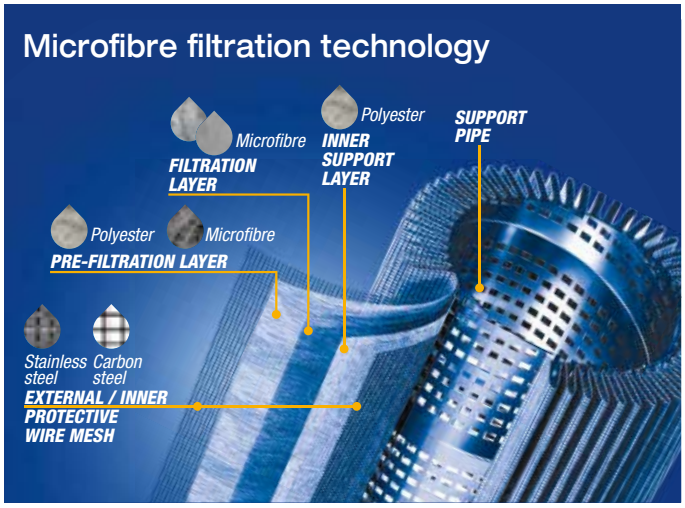

By removing water from your fluid power system, you can prevent such key problems as:
- corrosion (metal etching)
- loss of lubricant power
- accelerated abrasive wear in hydraulic components
- valve-locking
- bearing fatigue
- viscosity variance (reduction in lubricating properties)
- additive precipitation and oil oxidation
- increase in acidity level
- increased electrical conductivity (loss of dielectric strength)
- slow/weak response of control systems

Product availability:
LOW & MEDIUM PRESSURE FILTERS - LMP Series

LMP 210	LMP 900
LMP 211	LMP 901
LMP 400	LMP 902
LMP 401	LMP 903
LMP 430	LMP 950

(11) THE ANTI-STATIC FILTERS

zerospark

zerospark is a specialist solution designed to solve the problem of electrostatic discharge inside hydraulic filters. Caused by the electrical charge build-up due to the passage of oil through the filters, this can result in damage to filter elements, oils and circuit components. It can even cause fire hazards in environments where flammable materials are present.

THE TRIBOELECTRIC EFFECT
The body with the most electronegativity strips electrons from the other, generating a build-up of a net negative charge on itself. The other body is charged by the same amount but with the opposite sign, giving rise to very high potential differences. These, if not dissipated, can give rise to electrostatic discharges.

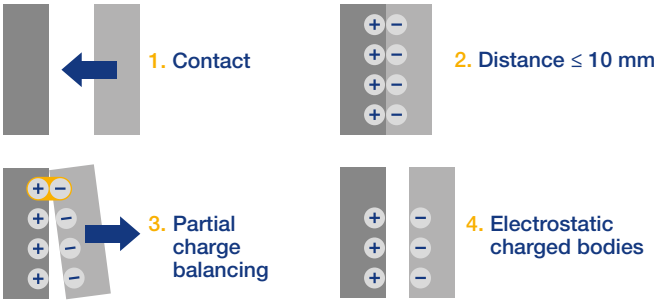



DISSIPATIVE FILTER ELEMENTS
To solve the problem of charge build-up in filters, MP Filtri has developed an innovative solution. By replacing certain insulating components with conductive zerospark versions, the charges on the media are free to move towards the head and are thus dissipated to the ground.

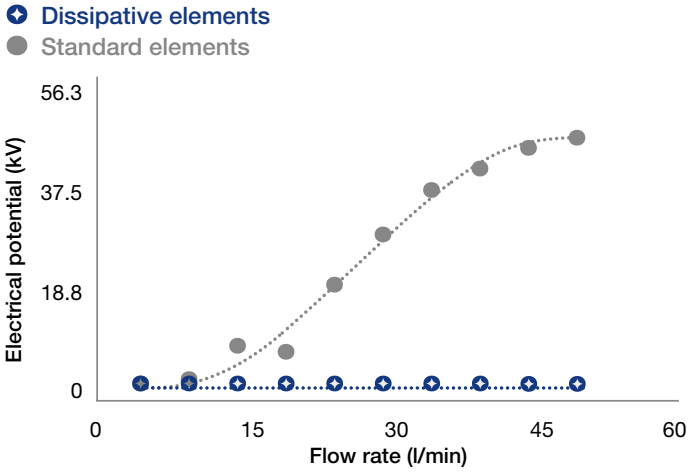

Under standard working conditions, the potential goes from tens of kV to zero, clearly showing the effectiveness of our dissipative filters.

The following table summarises some examples of test results at the same flow rate and temperature for elements of the same size but made of different materials.

Filter element	Electrical potential (kV)	Current (µA)
Standard glass microfibre	11	-6.0
Dissipative glass microfibre	0	-9.0
Standard cellulose	6	-1.3
Dissipative cellulose	0	-2.1
Other glass microfibre	9-15	-7.0
Other glass microfibre	3-8	-16.0

When using a synthetic oil instead of mineral oil,the values and sign of the two electrical quantities may vary.

	Mineral oil	Synthetic oil
Filter element	Electrical potential (kV)	
Standard glass microfibre	+11	+30
Dissipative glass microfibre	0	~0.0
Standard cellulose	+6	-43
Dissipative cellulose	0	~0.0

FILTER SIZING

INDEX

	Page
CALCULATION	23
CORRECTIVE FACTOR	24

THE CORRECT FILTER SIZING HAVE TO BE BASED ON THE TOTAL PRESSURE DROP DEPENDING BY THE APPLICATION.
FOR EXAMPLE, THE MAXIMUM TOTAL PRESSURE DROP ALLOWED BY A NEW AND CLEAN RETURN FILTER HAVE TO BE IN THE RANGE 0.4 - 0.6 bar / 5.80 - 8.70 psi.

The pressure drop calculation is performed by adding together the value of the housing with the value of the filter element. The pressure drop Δpc of the housing is proportional to the fluid density (kg/dm³ / lb/ft³).
The filter element pressure drop Δpe is proportional to its viscosity (mm²/s / SUS), the corrective factor Y have to be used in case of an oil viscosity different than 30 mm²/s (cSt) / 150 SUS.

Sizing data for single filter element, head at top

Δpc = Filter housing pressure drop [bar / psi]
Δpe = Filter element pressure drop [bar / psi]
Y = Corrective factor Y (see correspondent table), depending on the filter type, on the filter element size, on the filter element length and on the filter media
Q = flow rate (l/min - gpm)
V1 reference oil viscosity = 30 mm²/s (cSt) /150 SUS
V2 = operating oil viscosity in mm²/s (cSt) / SUS

Filter element pressure drop calculation with an oil viscosity different than 30 mm²/s (cSt) / 150 SUS

International system:
Δpe = Y : 1000 x Q x (V2:V1)

Imperial system:
Δpe = Y : 17.2 x Q x (V2:V1)

Δp Tot. = Δpc + Δpe

Verification formula

Δp Tot. ≤ Δp max allowed

Maximum total pressure drop (Δp max) allowed by a new and clean filter

Application	Range:[bar]	[psi]	
Suction filters	0.08 - 0.10 bar	1.16 - 1.45 psi	
Return filters	0.4 - 0.6 bar	5.80 - 8.70 psi	
Return - Suction filters (*)	0.8 - 1.0 bar	11.60 - 14.50 psi	
Low & Medium Pressure filters	0.4 - 0.6 bar	5.80 - 8.70 psi	return lines
	0.3 - 0.5 bar	4.35 - 7.25 psi	lubrication lines
	0.3 - 0.4 bar	4.35 - 5.80 psi	off-line in power systems
	0.1 - 0.3 bar	1.45 - 4.35 psi	off-line in test benches
	0.4 - 0.6 bar	5.80 - 8.7 psi	over-boost
High Pressure filters	0.8 - 1.5 bar	11.60 - 21.75 psi	
Stainless Steel filters	0.8 - 1.5 bar	11.60 - 21.75 psi	

(*) The suction flow rate should not exceed 30% of the return flow rate

Generic filter calculation example

Application data:
Tank top return filter
Pressure Pmax = 10 bar
Flow rate Q = 120 l/min
Viscosity V2 = 46 mm²/s (cSt)
Oil density = 0.86 kg/dm³
Required filtration efficiency = 25 µm with absolute filtration
With bypass valve and G 1 1/4" inlet connection

Calculation:
Δpc = 0.03 bar / 0.43 psi (see graphic below)

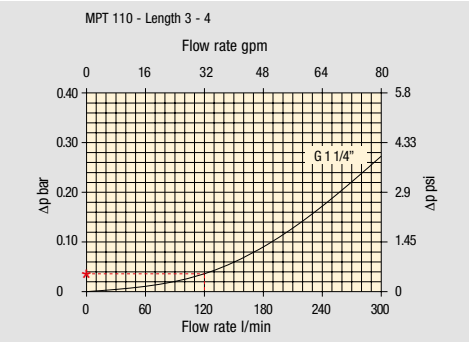

Filter housings Δp pressure drop.
The curves are plotted using mineral oil with density of 0.86 kg/dm³ in compliance with ISO 3968.
Δp varies proportionally with density.

Δpe = (2.00 : 1000) x 120 x (46 : 30) = 0.37 bar
Δpe = (2.00 : 17.2) x 32 x (216 : 150) = 5.36 psi

Filter element		Absolute filtration H Series					Nominal filtration N Series		
Type		A03	A06	A10	A16	A25	P10	P25	M25 M60 M90
Return filters		74.00	50.08	20.00	16.00	9.00	6.43	5.51	4.40
MF 020	2	29.20	24.12	8.00	7.22	5.00	3.33	2.85	2.00
	3	22.00	19.00	6.56	5.33	4.33	1.68	1.44	1.30
MF 030 MFX 030	1	74.00	50.08	20.00	16.00	9.00	6.43	5.51	3.40
MF 100 MFX 100	1	28.20	24.40	8.67	8.17	6.88	4.62	3.96	1.25
	2	17.33	12.50	6.86	5.70	4.00	3.05	2.47	1.10
	3	10.25	9.00	3.65	3.33	2.50	1.63	1.32	0.96
	4	6.10	5.40	2.30	2.20	2.00	1.19	0.96	0.82

Δp Tot. = 0.03 + 0.37 = 0.4 bar
Δp Tot. = 0.43 + 5.36 = 5.79 psi

The selection is correct because the total pressure drop value is inside the admissible range for top tank return filters.
In case the allowed max total pressure drop is not verified, it is necessary to repeat the calculation changing the filter length/size.

FILTER SIZING Corrective factor

Corrective factor Y to be used for the filter element pressure drop calculation. The values depend to the filter size and length and to the filter media.
Reference oil viscosity 30 mm²/s

Return filters

Filter element		Absolute filtration H Series					Nominal filtration N Series		
Type		A03	A06	A10	A16	A25	P10	P25	M25 M60 M90
MF 020	1	74.00	50.08	20.00	16.00	9.00	6.43	5.51	4.40
	2	29.20	24.12	8.00	7.22	5.00	3.33	2.85	2.00
	3	22.00	19.00	6.56	5.33	4.33	1.68	1.44	1.30
MF 030 MFX 030	1	74.00	50.08	20.00	16.00	9.00	6.43	5.51	3.40
MF 100 MFX 100	1	28.20	24.40	8.67	8.17	6.88	4.62	3.96	1.25
	2	17.33	12.50	6.86	5.70	4.00	3.05	2.47	1.10
	3	10.25	9.00	3.65	3.33	2.50	1.63	1.32	0.96
	4	6.10	5.40	2.30	2.20	2.00	1.19	0.96	0.82
MF 180 MFX 180	1	3.67	3.05	1.64	1.56	1.24	1.18	1.06	0.26
	2	1.69	1.37	0.68	0.54	0.51	0.43	0.39	0.12
MF 190 MFX 190	2	1.69	1.37	0.60	0.49	0.44	0.35	0.31	0.11
MF 400 MFX 400	1	3.20	2.75	1.39	1.33	1.06	0.96	0.87	0.22
	2	2.00	1.87	0.88	0.85	0.55	0.49	0.45	0.13
	3	1.90	1.60	0.63	0.51	0.49	0.39	0.35	0.11
MF 750 MFX 750	1	1.08	0.84	0.49	0.36	0.26	0.21	0.19	0.06
MLX 250	2	3.00	3.04	1.46	1.25	1.17	-	-	M25 0.20
MLX 660	2	1.29	1.26	0.52	0.44	0.38	-	-	M25 0.10
CU 025		78.00	48.00	28.00	24.00	9.33	9.33	8.51	1.25
CU 040		25.88	20.88	10.44	10.00	3.78	3.78	3.30	1.25
CU 100		15.20	14.53	5.14	4.95	2.00	2.00	0.17	1.10
CU 250		3.25	2.55	1.55	1.35	0.71	0.71	0.59	0.25
CU 630		1.96	1.68	0.85	0.72	0.42	0.42	0.36	0.09
CU 850		1.06	0.84	0.42	0.33	0.17	0.17	0.13	0.04
MR 100	1	19.00	17.00	6.90	6.30	4.60	2.94	2.52	1.60
	2	11.70	10.80	4.40	4.30	3.00	2.94	2.52	1.37
	3	7.80	6.87	3.70	3.10	2.70	2.14	1.84	1.34
	4	5.50	4.97	2.60	2.40	2.18	1.72	1.47	1.34
	5	4.20	3.84	2.36	2.15	1.90	1.60	1.37	1.34
MR 250	1	5.35	4.85	2.32	1.92	1.50	1.38	1.20	0.15
	2	4.00	3.28	1.44	1.10	1.07	0.96	0.83	0.13
	3	2.60	2.20	1.08	1.00	0.86	0.77	0.64	0.12
	4	1.84	1.56	0.68	0.56	0.44	0.37	0.23	0.11
MR 630	1	3.10	2.48	1.32	1.14	0.92	0.83	0.73	0.09
	2	2.06	1.92	0.82	0.76	0.38	0.33	0.27	0.08
	3	1.48	1.30	0.60	0.56	0.26	0.22	0.17	0.08
	4	1.30	1.20	0.48	0.40	0.25	0.21	0.16	0.08
	5	0.74	0.65	0.30	0.28	0.13	0.10	0.08	0.04
MR 850	1	0.60	0.43	0.34	0.25	0.13	0.12	0.09	0.03
	2	0.37	0.26	0.23	0.21	0.11	0.08	0.07	0.03
	3	0.27	0.18	0.17	0.17	0.05	0.04	0.04	0.02
	4	0.23	0.16	0.13	0.12	0.04	0.03	0.03	0.02

Return / Suction filters

Filter element		Absolute filtration		
Type		A10	A16	A25
RSX 116	1	5.12	4.33	3.85
	2	2.22	1.87	1.22
RSX 165 RSX 166	1	2.06	1.75	1.46
	2	1.24	1.05	0.96
	3	0.94	0.86	0.61

Filter element		Absolute filtration N Series							
Type		A03	A06	A10	A16	A25	P10	P25	M25 M60 M90
CU 110	1	16.25	15.16	8.75	8.14	5.87	2.86	2.65	0.14
	2	12.62	10.44	6.11	6.02	4.16	1.60	1.49	0.12
	3	8.57	7.95	5.07	4.07	2.40	1.24	1.15	0.11
	4	5.76	4.05	2.80	2.36	1.14	0.91	0.85	0.05

Low & Medium pressure filters

Filter element		Absolute filtration N-W Series					Nominal filtration N Series		
Type		A03	A06	A10	A16	A25	P10	P25	M25
CU 110	1	16.25	15.16	8.75	8.14	5.87	2.86	2.65	0.14
	2	12.62	10.44	6.11	6.02	4.15	1.60	1.49	0.12
	3	8.57	7.95	5.07	4.07	2.40	1.24	1.15	0.11
	4	5.76	4.05	2.80	2.36	1.14	0.91	0.85	0.05
CU 210	1	5.30	4.80	2.00	1.66	1.32	0.56	0.43	0.12
	2	3.44	2.95	1.24	1.09	0.70	0.42	0.35	0.09
	3	2.40	1.70	0.94	0.84	0.54	0.33	0.23	0.05
DN	016	7.95	7.20	3.00	2.49	1.98	0.84	0.65	0.18
	025	5.00	4.53	1.89	1.57	1.25	0.53	0.41	0.11
	040	3.13	2.66	1.12	0.98	0.63	0.38	0.32	0.08
CU 400	2	3.13	2.55	1.46	1.22	0.78	0.75	0.64	0.19
	3	2.15	1.70	0.94	0.78	0.50	0.40	0.34	0.10
	4	1.60	1.28	0.71	0.61	0.40	0.34	0.27	0.08
	5	1.00	0.83	0.47	0.34	0.20	0.24	0.19	0.06
	6	0.82	0.58	0.30	0.27	0.17	0.22	0.18	0.05
CU 900	1	0.86	0.63	0.32	0.30	0.21	-	-	0.05
CU 950	2	1.03	0.80	0.59	0.40	0.26	-	-	0.05
	3	0.44	0.40	0.27	0.18	0.15	-	-	0.02
MR 630	7	0.88	0.78	0.36	0.34	0.16	0.12	0.96	0.47

Corrective factor Y to be used for the filter element pressure drop calculation. The values depend to the filter size and length and to the filter media.
Reference oil viscosity 30 mm²/s

High pressure filters

Filter element		Absolute filtration N - R Series					Nominal filtration N Series
Type		A03	A06	A10	A16	A25	M25
HP 011	1	332.71	250.07	184.32	152.36	128.36	-
	2	220.28	165.56	74.08	59.13	37.05	-
	3	123.24	92.68	41.48	33.08	20.72	-
	4	77.76	58.52	28.37	22.67	16.17	-
HP 039	2	70.66	53.20	25.77	20.57	14.67	4.90
	3	36.57	32.28	18.00	13.38	8.00	2.90
	4	26.57	23.27	12.46	8.80	5.58	2.20
HP 050	1	31.75	30.30	13.16	12.3	7.29	1.60
	2	24.25	21.26	11.70	9.09	4.90	1.40
	3	17.37	16.25	8.90	7.18	3.63	1.25
	4	12.12	10.75	6.10	5.75	3.08	1.07
	5	7.00	6.56	3.60	3.10	2.25	0.80
HP 065	1	58.50	43.46	23.16	19.66	10.71	1.28
	2	42.60	25.64	16.22	13.88	7.32	1.11
	3	20.50	15.88	8.18	6.81	3.91	0.58
HP 135	1	20.33	18.80	9.71	8.66	4.78	2.78
	2	11.14	10.16	6.60	6.38	2.22	1.11
	3	6.48	6.33	3.38	3.16	2.14	1.01
HP 150	1	17.53	15.91	7.48	6.96	5.94	1.07
	2	8.60	8.37	3.54	3.38	3.15	0.58
	3	6.53	5.90	2.93	2.79	2.12	0.49
HP 320	1	10.88	9.73	5.02	3.73	2.54	1.04
	2	4.40	3.83	1.75	1.48	0.88	0.71
	3	2.75	2.11	1.05	0.87	0.77	0.61
	4	2.12	1.77	0.98	0.78	0.55	0.47
HP 500	1	4.44	3.67	2.30	2.10	1.65	0.15
	2	3.37	2.77	1.78	1.68	1.24	0.10
	3	2.22	1.98	1.11	1.09	0.75	0.08
	4	1.81	1.33	0.93	0.86	0.68	0.05
	5	1.33	1.15	0.77	0.68	0.48	0.04

		Absolute filtration - N Series					
Type		A03	A06	A10	A16	A25	M25
HF 325	1	3.65	2.95	2.80	1.80	0.90	0.38
	2	2.03	1.73	1.61	1.35	0.85	0.36
	3	1.84	1.42	1.32	1.22	0.80	0.35

Suction filters

	Nominal filtration - N Series					
Type	P10	P25	M25	M60	M90	M250
SF 250	0.65	0.20	0.10	0.08	0.05	0.03
SF 503	–	–	0.17	0.11	0.11	0.11
SF 504	–	–	0.11	0.08	0.08	0.08
SF 505	–	–	0.23	0.18	0.18	0.18
SF 510	–	–	0.18	0.14	0.14	0.14
SF 535	–	–	0.08	0.05	0.05	0.05
SF 540	–	–	0.05	0.04	0.04	0.04

Stainless steel high pressure filters

Filter element		Absolute filtration N Series				
Type		A03	A06	A10	A16	A25
HP 011	1	332.71	250.07	184.32	152.36	128.36
	2	220.28	165.56	74.08	59.13	37.05
	3	123.24	92.68	41.48	33.08	20.72
	4	77.76	58.52	28.37	22.67	16.17
HP 039	2	70.66	53.20	25.77	20.57	14.67
	3	36.57	32.28	18.00	13.38	8.00
	4	26.57	23.27	12.46	8.80	5.58
HP 050	1	31.75	30.30	13.16	12.3	7.29
	2	24.25	21.26	11.70	9.09	4.90
	3	17.37	16.25	8.90	7.18	3.63
	4	12.12	10.75	6.10	5.75	3.08
	5	7.00	6.56	3.60	3.10	2.25
HP 135	1	20.33	18.80	9.71	8.66	4.78
	2	11.14	10.16	6.60	6.38	2.22
	3	6.48	6.33	3.38	3.16	2.14

Filter element		Absolute filtration H - U Series				
Type		A03	A06	A10	A16	A25
HP 011	1	424.58	319.74	235.17	194.44	163.78
	2	281.06	211.25	94.53	75.45	47.26
	3	130.14	97.50	43.63	34.82	21.81
	4	109.39	82.25	36.79	29.37	18.40
HP 039	2	73.00	57.00	28.00	24.00	17.20
	3	40.90	36.33	21.88	18.80	11.20
	4	31.50	28.22	17.22	9.30	6.70
HP 050	1	47.33	34.25	21.50	20.50	14.71
	2	29.10	25.95	14.04	10.90	5.88
	3	20.85	19.50	10.68	8.61	4.36
	4	14.55	12.90	7.32	6.90	3.69
	5	9.86	9.34	6.40	4.80	2.50
HP 135	1	29.16	25.33	13.00	12.47	5.92
	2	14.28	11.04	7.86	7.60	4.44
	3	8.96	7.46	4.89	4.16	3.07

TYPICAL FILTER SIZING Selection Software

Step 1 Select “FILTERS”



Step 2 Choose filter group (Return Filter, Pressure Filter, etc.)



Step 3 Choose filter type (MPF, MPT, etc.) in function of the max working pressure and the max flow rate

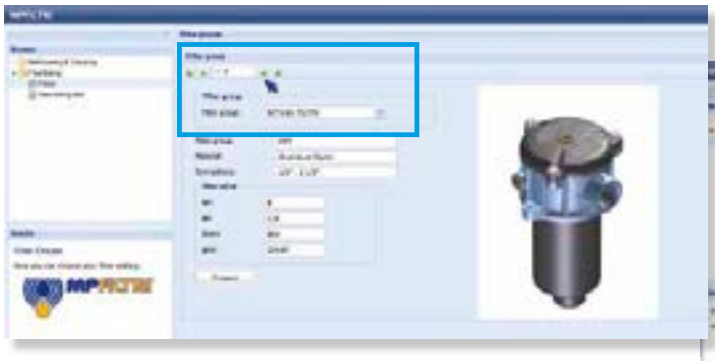

Step 4 Push “PROCEED”





Step 5

Insert all application data to calculate the filter size following the sequence:

- working pressure
- working flow rate
- working pressure drop
- working temperature
- fluid material and fluid type
- filtration media
- connection type

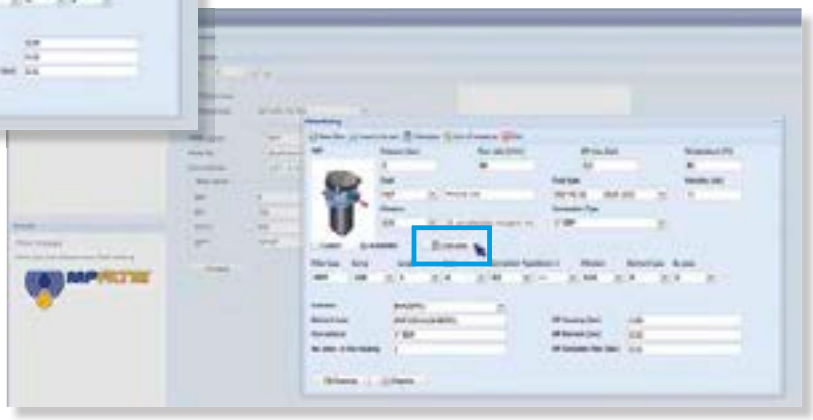

Step 6

Push “CALCULATE” to have result; in case of any mistake, the system will advice which parameter is out of range to allow to modify/adjust the selection

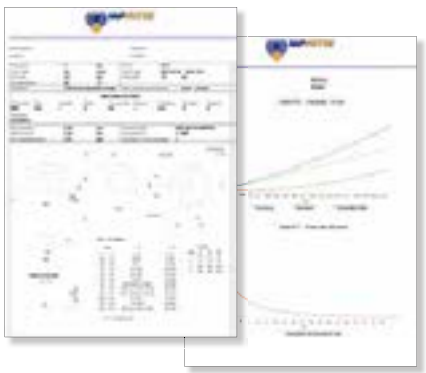

Step 7

Download PDF Datasheet “Report.aspx” pushing the button “Drawing”

Suction filters are used as safety filters to protect pumps from gross contamination which can cause them to grip.

They are available in 2 styles:
- Suction Strainer (STR, MPA, MPM)
- SF2 external filters, for mounting semi-immersed under the oil level

SF2 semi-immersed filters, which shut-off oil flow while the filter element is being replaced, replace the butterfly valves usually used for servicing hydraulic pumps.

FILTER SIZING

For the proper corrective factor Y see chapter at page 25

Suction filters



STR & MPA - MPM	page 31
SF2 250 - 350	39
SF2 500	47
INDICATORS	57

STR & MPA - MPM series

Flow rate up to 1000 l/min



STR & MPA-MPM GENERAL INFORMATION

Description

Suction filters

Flow rate up to 1000 l/min

STR

STR is a range of suction strainers for protection of the downstream pump against the coarse contamination.
They are placed below the oil level directly connected to the suction line of the pump.

Available features:
- Female threaded connections up to 3", for a maximum flow rate of 1000 l/min
- Bypass valve, to relieve excessive pressure drop across the filter media

Common application:
- Mobile machines (Construction and Agriculture machines)
- Industrial equipment

MPA - MPM

MPA and MPM are ranges of suction strainers for protection of the downstream pump against the coarse contamination.
They are placed below the minimum oil level, directly connected to the suction line of the pump.
The robust design allows the use of these filters in any heavy duty application.

Available features:
- Female threaded connections up to 3", for a maximum flow rate of 1000 l/min
- Magnetic filter (MPM), to hold the ferrous particles

Common application:
Industrial equipment

Technical data

STR materials
1 - Connection: Polyamide, GF reinforced
2 - Core tube: Tinned Steel
3 - Wire mesh
4 - End cap: Polyamide, GF reinforced
5 - Bypass valve: Polyamide, GF reinforced - Steel

MPA - MPM materials
1 - Connection: Aluminium
2 - Magnetic filter
3 - Tie rod: Galvanized Steel
4 - End cap: Galvanized Steel
5 - Core tube: Galvanized Steel
6 - Filter media: Wire mesh
7 - Bottom: Galvanized Steel
8 - Washer: Galvanized Steel
9 - Self-locking nut: Galvanized Steel - Nylon

Bypass valve
Opening pressure 30 kPa (0.3 bar)

Elements
Fluid flow through the filter element from OUT to IN.

Temperature
From -25 °C to +110 °C



Weights [kg]

Filter series	
STR	see page 35
MPA - MPM	see page 37



STR
Without bypass



STR
With bypass



MPA
Without magnetic filter

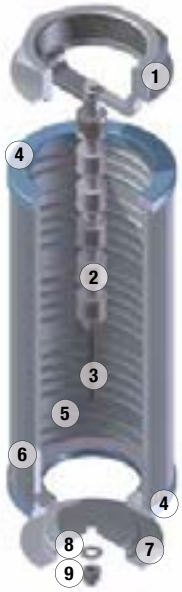

MPM
With magnetic filter

FILTER ASSEMBLY SIZING
Flow rates [l/min]

Filter series	Thread	l/min
STR & MPA - MPM	3/8”	19
	1/2”	28
	3/4”	67
	1”	126
	1 1/4”	167
	1 1/2”	258
	2”	480
	2 1/2”	854
	2”	480
	3”	995

Maximum flow rate for a complete suction filter with a pressure drop Δp = 0.08 bar.
The reference fluid has a kinematic viscosity of 30 mm^2/s (cSt) and a density of 0.86 kg/dm^3.
For different pressure drop or fluid viscosity we recommend to use our selection software available on www.mpfiltri.com.
You can also calculate the right size using the formulas present on the FILTER SIZING paragraph at the beginning of the full catalogue or at the beginning of the filter family brochure.
Please, contact our Sales Department for further additional information.

Hydraulic symbols

Filter series	Style S	Style B
STR	•	•
MPA - MPM	•	

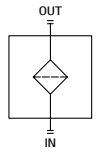

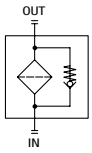

Pressure drop

Filters pressure drop Δp
in function of connection type

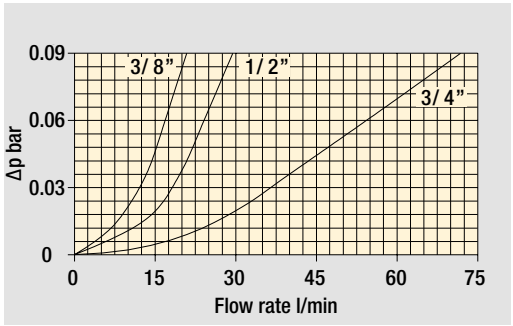

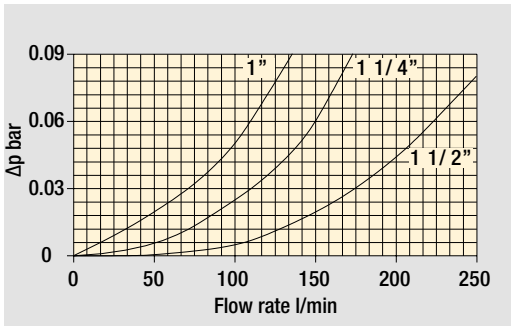

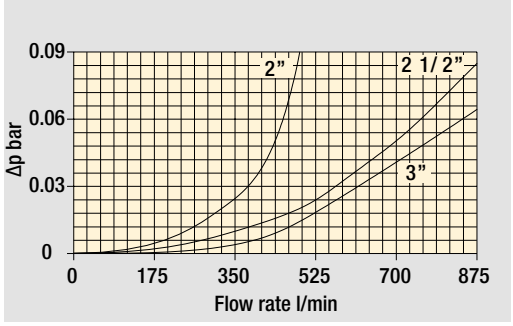

The curves are plotted using mineral oil with density of 0.86 kg/dm^3 in compliance with ISO 3968. Δp varies proportionally with density.

STR

Designation & Ordering code

COMPLETE FILTER

Configuration example 1: STR045 | 1 | B | G1 | M60 | P01

Configuration example 2: STR100 | 4 | S | G2 | M250 | P01

Element series and size

STR045
STR050
STR065
STR070
STR086
STR100
STR140
STR150

Connection type

	STR045	STR050	STR065	STR070	STR086	STR100	STR140	STR150
1	3/8”	3/8”	1/2”	1/2”	1 1/2”	1 1/4”	1 1/2”	2”
2	1/2”	1/2”	3/4”	3/4”	2”	1 1/4”	2”	2 1/2”
3	-	-	3/4”	3/4”	1 1/2”	1 1/2”	2”	3”
4	-	-	1”	1”	2”	2”	2 1/2”	-
5	-	-	-	-	1 1/2”	1 1/2”	3”	-
6	-	-	-	1/2”	2”	-	3”	-

Valves

S	Without bypass
B	With bypass 0.3 bar

Thread type

G1	Thread GAS
G2	Thread NPT

Filtration rating (filter media)

M25	Wire mesh	25 µm
M60	Wire mesh	60 µm
M90	Wire mesh	90 µm
M250	Wire mesh	250 µm

Execution

P01	MP Filtri standard
Pxx	Customized

OTHER INFORMATION

Conditions of packaging

Filter size	Pcs. per box
045	12
050	12
065	6
070	6
086	6
100	6
140	1
150	1

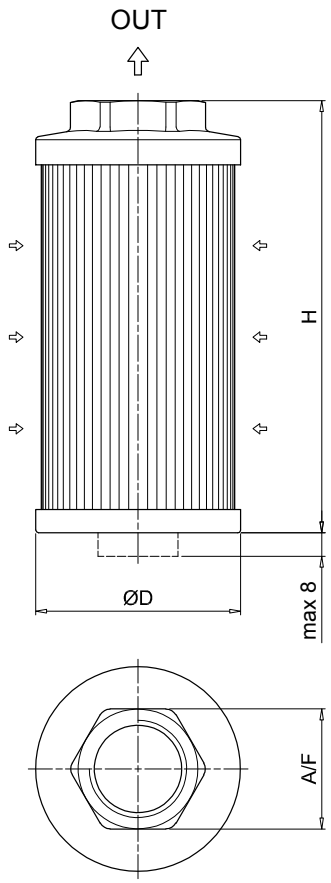

STR						
Filter size	Connection type	Thread	Ø D [mm]	H [mm]	A / F [mm]	Weight [kg]
045	1	3/8”	46	105	30	0.15
	2	1/2”	46	105	30	0.19
050	1	3/8”	52	79	30	0.11
	2	1/2”	52	79	30	0.11
065	1	1/2”	65	110	41	0.19
	2	3/4”	65	110	41	0.22
	3	3/4”	65	144	41	0.24
	4	1”	65	144	41	0.22
070	1	1/2”	70	95	41	0.18
	2	3/4”	70	95	41	0.17
	3	3/4”	70	141	41	0.23
	4	1”	70	141	41	0.22
	6	1/2”	70	141	41	0.24
086	1	1 1/2”	86	143	69	0.33
	2	2”	86	143	69	0.30
	3	1 1/2”	86	201	69	0.43
	4	2”	86	201	69	0.40
	5	1 1/2”	86	261	69	0.53
	6	2”	86	261	69	0.50
100	1	1 1/4”	99	137	69	0.47
	2	1 1/4”	99	227	69	0.58
	3	1 1/2”	99	227	69	0.55
	4	2”	99	227	69	0.51
	5	1 1/2”	99	137	69	0.43
140	1	1 1/2”	130	160	69	0.70
	2	2”	130	160	69	0.68
	3	2”	130	262	69	0.94
	4	2 1/2”	130	272	101	1.10
	5	3”	130	272	101	1.00
	6	3”	130	330	101	1.17
150	1	2”	150	150	70	0.34
	2	2 1/2”	150	212	90	0.37
	3	3”	150	272	100	0.40

MPA-MPM

Designation & Ordering code

COMPLETE FILTER

Configuration example 1:	MPA	030	G1	M60	P01
Configuration example 2:	MPM	430	G2	M250	P01

Element series

MPA	Without magnetic filter
MPM	With magnetic filter

Connections

012	3/8”
015	1/2”
025	1/2”
030	3/4”
045	3/4”
050	1”
075	1”
095	1 1/4”
120	1 1/4”
150	1 1/2”
180	1 1/2”
220	2”
280	2”
300	2 1/2”
380	2”
430	3”

Thread type

G1	Thread GAS
G2	Thread NPT

Filtration rating (filter media)

M25	Wire mesh 25 µm
M60	Wire mesh 60 µm
M90	Wire mesh 90 µm
M250	Wire mesh 250 µm

Execution

P01	MP Filtri standard
Pxx	Customized

OTHER INFORMATION

Conditions of packaging

Size	Pcs. per box
012	12
015	6
025	6
030	6
045	6
050	6
075	6
095	6
120	6
150	6
180	1
220	1
280	1
300	1
380	1
430	1

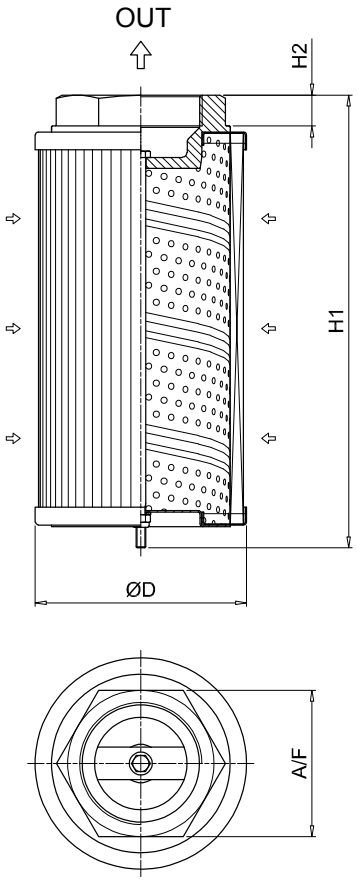

MPA

Filter size	Thread	ØD [mm]	H1 [mm]	H2 [mm]	A/F [mm]	Weight [kg]
012	3/8”	50	98	16	28	0.17
015	1/2”	50	98	16	28	0.17
025	1/2”	70	113	16	28	0.27
030	3/4”	70	115	18	42	0.36
045	3/4”	70	160	18	42	0.39
050	1”	70	160	18	42	0.35
075	1”	99	145	18	42	0.54
095	1 1/4”	99	148	20	60	0.63
120	1 1/4”	99	239	20	60	0.95
150	1 1/2”	99	239	20	60	0.91
180	1 1/2”	130	174	20	60	0.98
220	2”	130	162	13	80	1.00
280	2”	130	272	13	80	1.60
300	2 1/2”	130	281	20	90	1.67
380	2”	130	322	13	80	1.60
430	3”	130	335	22	106	1.93

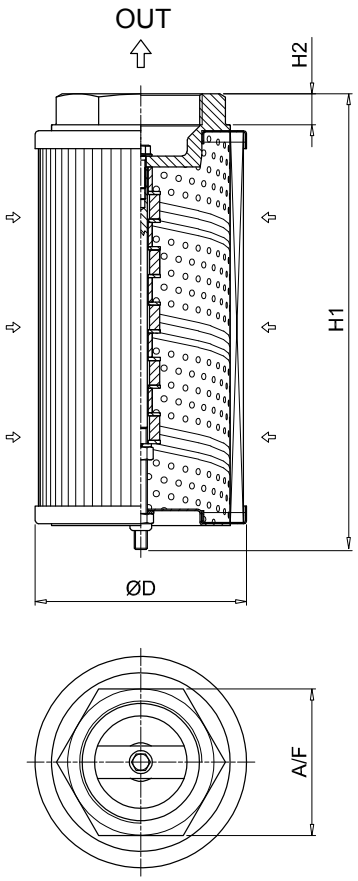

MPM

Filter size	Thread	ØD [mm]	H1 [mm]	H2 [mm]	A/F [mm]	Weight [kg]
012	3/8”	50	98	16	28	0.17
015	1/2”	50	98	16	28	0.17
025	1/2”	70	113	16	28	0.27
030	3/4”	70	115	18	42	0.36
045	3/4”	70	160	18	42	0.39
050	1”	70	160	18	42	0.35
075	1”	99	148	18	42	0.54
095	1 1/4”	99	154	20	60	0.63
120	1 1/4”	99	244	20	60	0.95
150	1 1/2”	99	244	20	60	0.91
180	1 1/2”	130	174	20	60	0.98
220	2”	130	163	13	80	1.00
280	2”	130	273	13	80	1.60
300	2 1/2”	130	282	20	90	1.67
380	2”	130	323	13	80	1.60
430	3”	130	336	22	106	1.93

SF2 250-350 series

Flow rate up to 160 l/min



SF2 250-350 GENERAL INFORMATION

Description

Suction filters

Flow rate up to 160 l/min

SF2 250 and SF2 350 are ranges of suction filters with integrated shut-off valve for protection of the downstream pump against the coarse contamination.
They are placed below the minimum oil level, directly connected to the suction line of the pump.
They can be fitted on the side or below the tank, allowing a more flexible design of the tank.
The shut-off valve closes automatically when the cover is removed, allowing the filter element replacement without the fluid drop.

Available features:
- Female threaded connections up to 1" and flanged connections up to 1 1/2", for a maximum flow rate of 160 l/min
- Multiple connections, to connect several suction lines
- Bypass valve, to relieve excessive pressure drop across the filter media
- Magnetic filter, to hold the ferrous particles
- Visual, electrical and electronic clogging indicators

Common application:
- Mobile machines
- Industrial equipment

Technical data

Filter housing materials
- Filter body: Aluminium
- Cover: Polyamide, GF reinforced
- Valve: Polyamide, GF reinforced - Steel
- Anti-Emptying valve: Steel

Bypass valve
Opening pressure 30 kPa (0.3 bar) ±10%

Elements
Fluid flow through the filter element from IN to OUT

Seals
- Standard NBR series A
- Optional FPM series V

Temperature
From -25 °C to +110 °C

Note
SF2 250-350 filters mounting, see the drawings on page 43 and following.



Weights [kg]

Filter series	
SF2 250	2.6
SF2 350	2.6

FILTER ASSEMBLY SIZING
Flow rates [l/min]

	Filter element design - N Series					
Filter series	M25	M60	M90	M250	P10	P25
SF2 250	147	151	155	160	85	132
SF2 350	147	151	155	160	85	132

Maximum flow rate for a complete suction filter with a pressure drop Δp = 0.08 bar.
The reference fluid has a kinematic viscosity of 30 mm²/s (cSt) and a density of 0.86 kg/dm³.
For different pressure drop or fluid viscosity we recommend to use our selection software available on www.mpfiltri.com.
You can also calculate the right size using the formulas present on the FILTER SIZING paragraph at the beginning of the full catalogue or at the beginning of the filter family brochure.
Please, contact our Sales Department for further additional information.

Hydraulic symbols

Filter series	Style R - S		Style Q - H	
SF2 250	•		•	
SF2 350		•		•

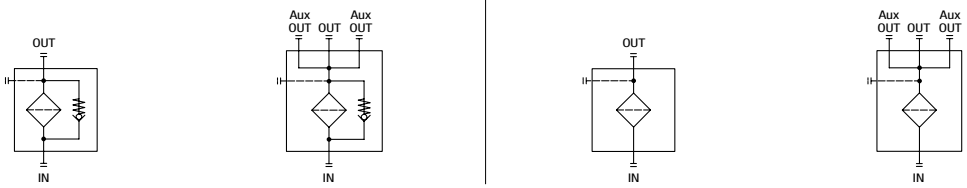

Pressure drop

Filter housings Δp pressure drop

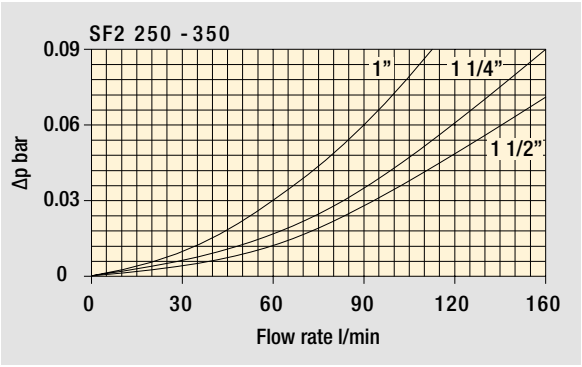

Bypass valve pressure drop

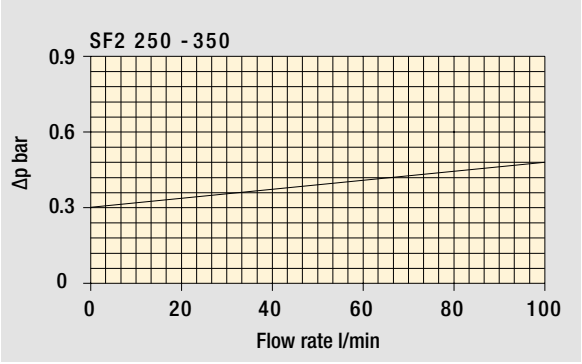

The curves are plotted using mineral oil with density of 0.86 kg/dm³ in compliance with ISO 3968. Δp varies proportionally with density.

SF2 250-350

Designation & Ordering code

COMPLETE FILTER

Configuration example 1: SF2250 | W | F2 | R | M25 | P01

Configuration example 2: SF2350 | A | G1 | S | M90 | P01

Series and size

SF2250

SF2350

Seals and treatments		Filtration rating Mxx	Filtration rating Pxx
A	NBR	•	•
V	FPM	•	•
W	NBR compatible with fluids HFA-HFB-HFC	•	
Z	FPM compatible with fluids HFA-HFB-HFC	•	

Connections		Aux (only SF2350)	SF2250	SF2350
G1	G 1 1/2”	G 1”	•	•
G2	1 1/2” NPT	-	•	
G3	SAE 24 - 1 7/8” - 12 UN	SAE 16 - 1 5/16” - 12 UN	•	•
G4	G 1 1/4”	-	•	
G5	1 1/4” NPT	-	•	
G6	SAE 20 - 1 5/8” - 12 UN	-	•	
G7	G 1”	-	•	
G8	1” NPT	-	•	
G9	SAE 16 - 1 5/16” - 12 UN	-	•	
F1	1 1/2” SAE 3000 psi/M	-	•	
F2	1 1/2” SAE 3000 psi/UNC	-	•	

Bypass valve and magnetic filter

R	With bypass, with magnetic filter	**Q**	Without bypass, with magnetic filter
S	With bypass, without magnetic filter	**H**	Without bypass, without magnetic filter

Filtration rating (filter media)

M25	Wire mesh 25 µm	**P10**	Resin impregnated paper 10 µm
M60	Wire mesh 60 µm	**P25**	Resin impregnated paper 25 µm
M90	Wire mesh 90 µm		
M250	Wire mesh 250 µm		

Execution

P01	MP Filtri standard
Pxx	Customized

FILTER ELEMENT

Configuration example 1: SF250 | M25 | W | P01

Configuration example 2: SF250 | M90 | N | P01

Element series and size

SF250

Filtration rating (filter media)

M25	Wire mesh 25 µm	**P10**	Resin impregnated paper 10 µm
M60	Wire mesh 60 µm	**P25**	Resin impregnated paper 25 µm
M90	Wire mesh 90 µm		
M250	Wire mesh 250 µm		

Seals and treatments		Filtration rating Mxx	Filtration rating Pxx
N	NBR	•	•
V	FPM	•	•
W	NBR compatible with fluids HFA-HFB-HFC	•	
Z	FPM compatible with fluids HFA-HFB-HFC	•	

Execution

P01	MP Filtri standard
Pxx	Customized

ACCESSORIES

Clogging indicators		page
VVA	Axial vacuum gauge	59
VVR	Radial vacuum gauge	59
VEA	Electrical vacuum indicator	58
VLA	Electrical / visual vacuum indicator	58

SF2 250
Threaded connections “G”

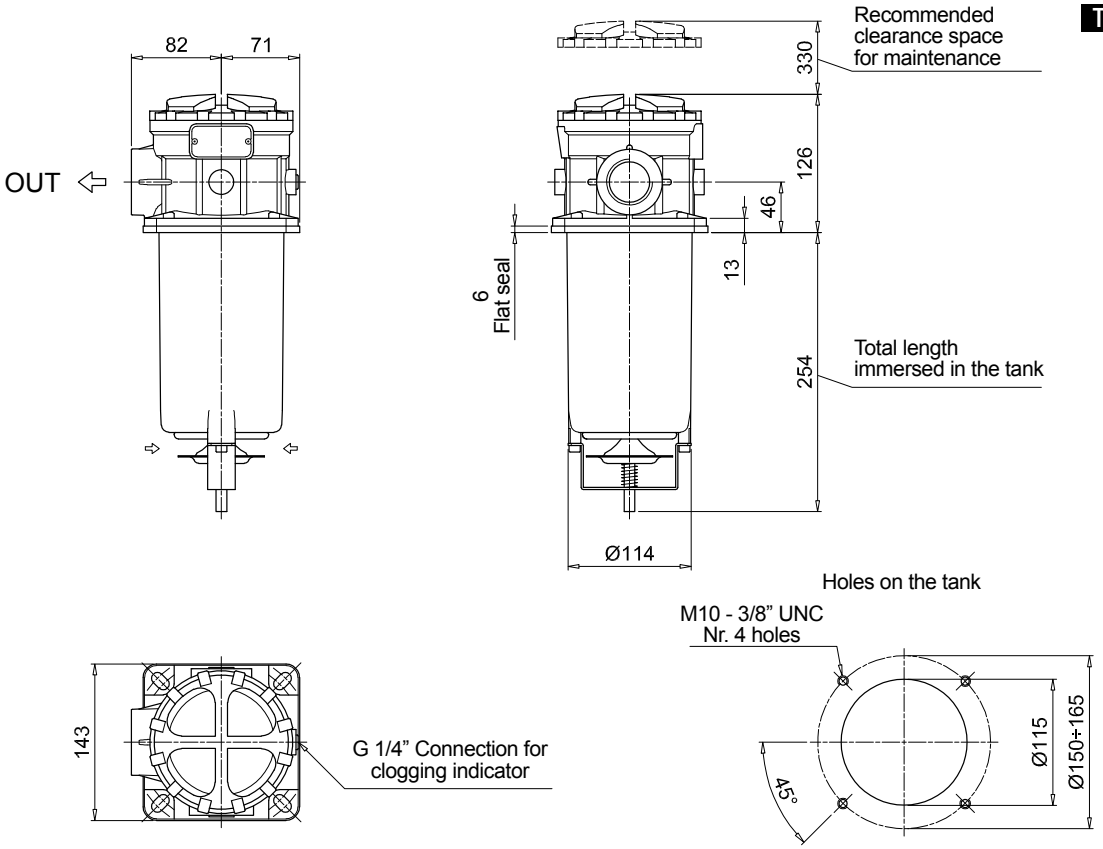

SF2 250
Flange connections “F”

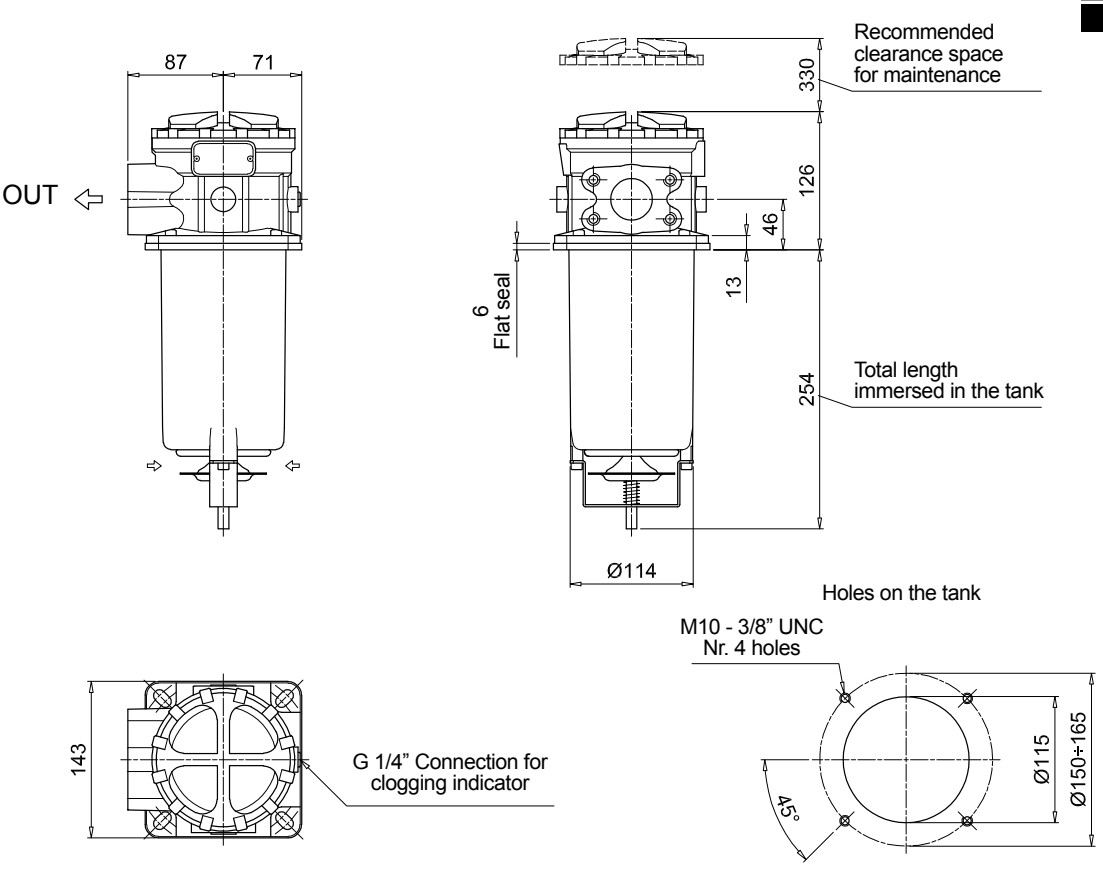

SF2 250-350

Dimensions

SF2 350

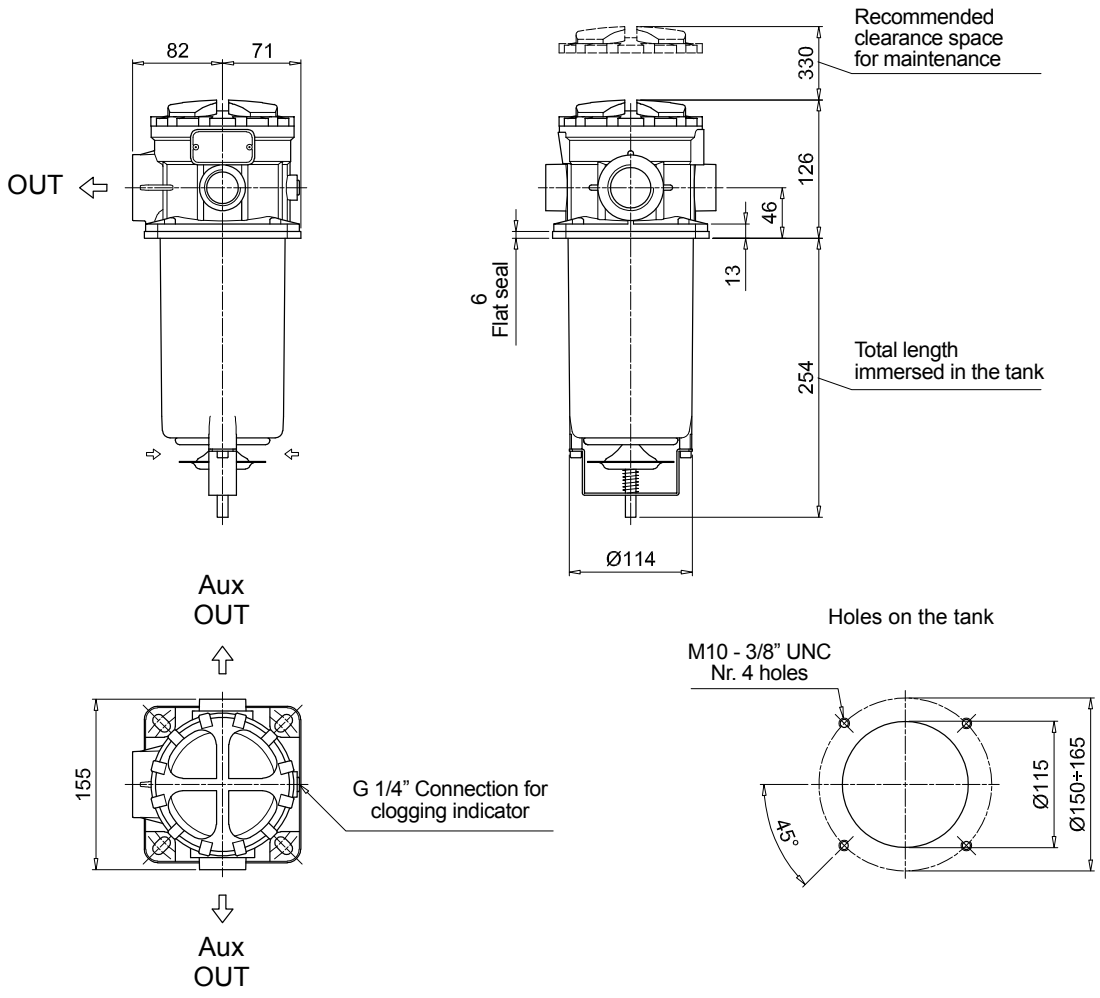

Order number for spare parts

SF2 250

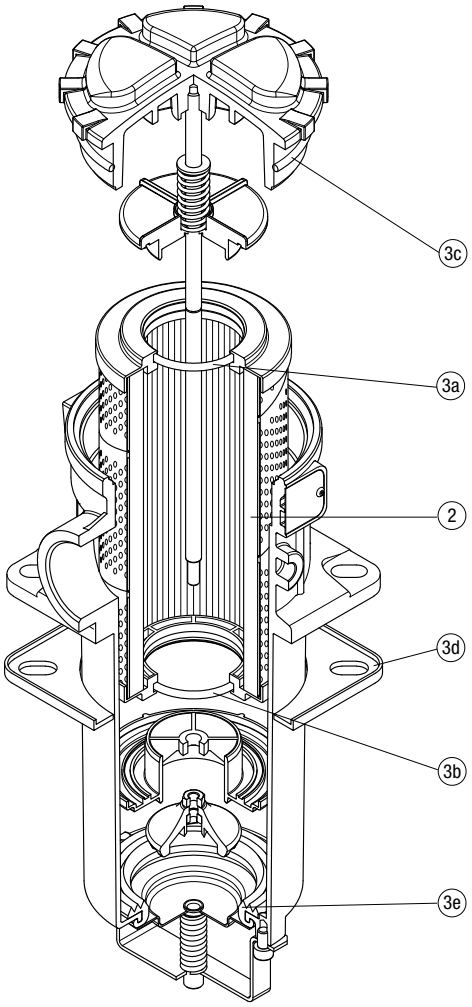

SF2 350

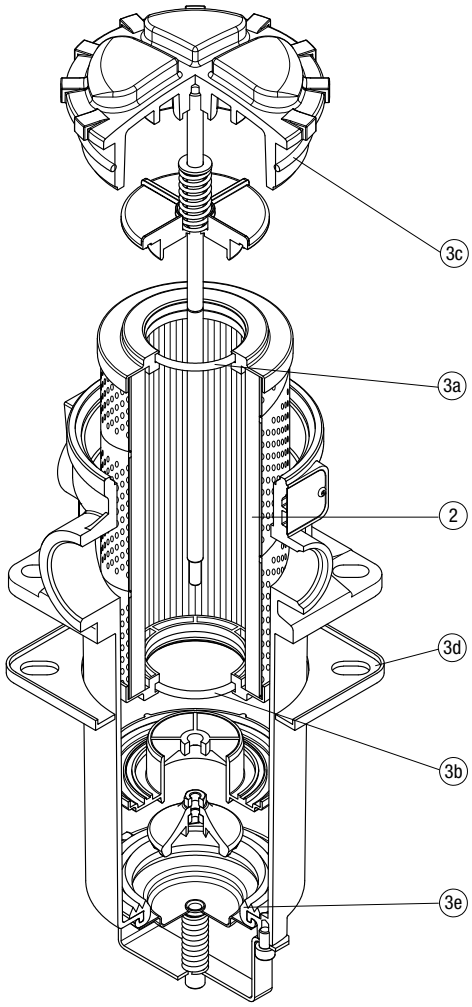

Item:	Q.ty: 1 pc. 2	Q.ty: 1 pc. 3 (3a ÷ 3e)	
Filter series	**Filter element**	**Seal Kit code number NBR**	**FPM**
SF2 250 - 350	See order table	02050586	02050587

SF2 500 series

Flow rate up to 700 l/min



SF2 500 GENERAL INFORMATION

Description

Suction filters

Flow rate up to 700 l/min

SF2 500 is a range of suction filters with integrated shut-off valve for protection of the downstream pump against the coarse contamination. They are placed below the minimum oil level, directly connected to the suction line of the pump.
They can be fitted on the side or below the tank, allowing a more flexible design of the tank.
The shut-off valve closes automatically when the cover is removed, allowing the filter element replacement without the fluid drop.

Available features:
- Flanged connections up to 4", for a maximum flow rate of 700 l/min
- Optional hose fitting installed, to connect the suction line without the use of flanges
- Magnetic filter, to hold the ferrous particles
- Plastic and metal handle, to close the shut-off valve before the cover removal
- Electrical switch, to signal the closed shut-off valve
- Visual, electrical and electronic clogging indicators

Common application:
Industrial equipment

Technical data

Filter housing materials
- Housing:
  Anodized Aluminium
  Steel (chemical heat treatment): only for SF2 535 - 540

- Cover:
  Anodized Aluminium
  Steel (chemical heat treatment): only for SF2 535 - 540

- Optional flange:
  Anodized Aluminium

Elements
Fluid flow through the filter element from IN to OUT

Seals
- Standard NBR series A
- Optional FPM series V

Temperature
From -25 °C to +110 °C

Note
SF2 500 filters mounting, see the drawings on page 51 and following



Weights [kg]

Filter series	
SF2 500-501	4.0
SF2 503	4.8
SF2 504	5.8
SF2 505	6.0
SF2 510	7.2
SF2 535	17
SF2 540	19

FILTER ASSEMBLY SIZING
Flow rates [l/min]

Filter series	Filter element design - N Series	
	M25	M60 M90 M250
SF2 500	219	234
SF2 501	259	282
SF2 503	325	390
SF2 504	484	543
SF2 505	199	221
SF2 510	259	282
SF2 535	439	479
SF2 540	644	688

Maximum flow rate for a complete suction filter with a pressure drop Δp = 0.08 bar.
The reference fluid has a kinematic viscosity of 30 mm²/s (cSt) and a density of 0.86 kg/dm³.
For different pressure drop or fluid viscosity we recommend to use our selection software available on www.mpfiltri.com.
You can also calculate the right size using the formulas present on the FILTER SIZING paragraph at the beginning of the full catalogue or at the beginning of the filter family brochure.
Please, contact our Sales Department for further additional information.

Filter series	
SF2 500	•

Hydraulic symbols

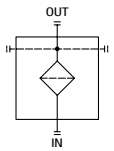

Pressure drop
Filter housings Δp pressure drop

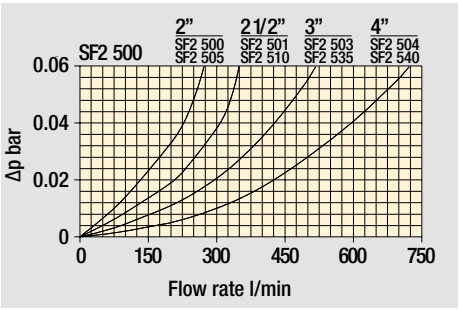

Filter element Δp pressure drop

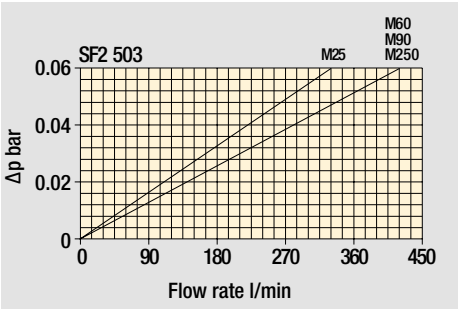

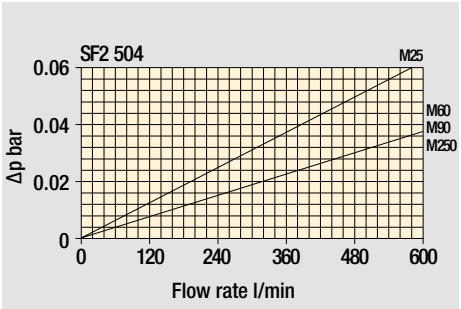

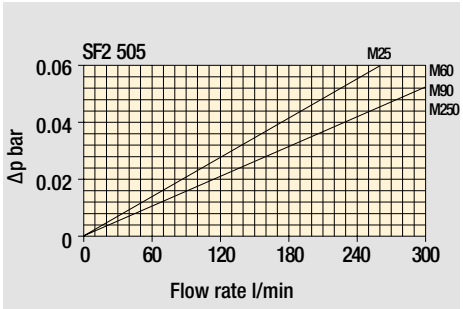

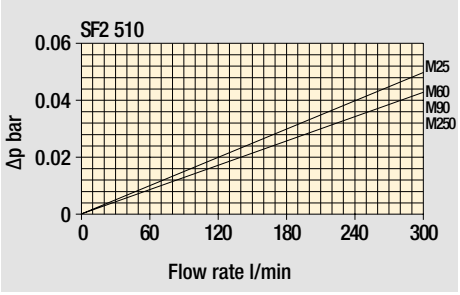

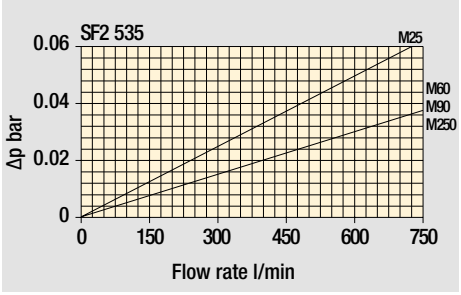

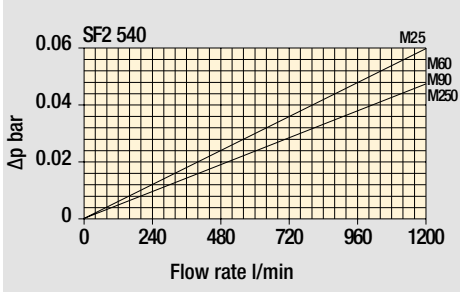

The curves are plotted using mineral oil with density of 0.86 kg/dm³ in compliance with ISO 3968. Δp varies proportionally with density.

Designation & Ordering code

COMPLETE FILTER

Configuration example 1: SF2500 | W | F1 | D | M25 | P01
Configuration example 2: SF2535 | A | F2 | C | M60 | P01

Series and size

- **SF2500**
- **SF2501**
- **SF2503**
- **SF2504**
- **SF2505**
- **SF2510**
- **SF2535**
- **SF2540**

Seals and treatments — Filtration rating: Mxx

		Mxx
A	NBR	•
V	FPM	•
W	NBR compatible with fluids HFA-HFB-HFC	•
Z	FPM compatible with fluids HFA-HFB-HFC	•

Connections

	SF2500 - SF2505	SF2501 - SF2510	SF2503 - SF2535	SF2504 - SF2540
F1	2” SAE 3000 psi/M	2 1/2” SAE 3000 psi/M	3” SAE 3000 psi/M	4” SAE 3000 psi/M
F2	2” SAE 3000 psi/UNC	2 1/2” SAE 3000 psi/UNC	3” SAE 3000 psi/UNC	4” SAE 3000 psi/UNC
C1	Hose barb 2”/M	Hose barb 2 1/2”/M	Hose barb 3”/M	Hose barb 4”/M

Microswitch and Handweel

		SF2500 - SF2501	SF2503 - SF2504	SF2505 - SF2510	SF2535 - SF2540
S	Without microswitch, without handwheel	•	•	•	•
C	With microswitch, without handwheel			•	•
D	With microswitch, with Nylon handwheel	•	•		
K	With microswitch, with steel handwheel	•	•		
M	Without microswitch, with Nylon handwheel	•	•		

Filtration rating (filter media)

M25	Wire mesh 25 µm	**M90**	Wire mesh 90 µm
M60	Wire mesh 60 µm	**M250**	Wire mesh 250 µm

Execution

- **P01** MP Filtri standard
- **Pxx** Customized

FILTER ELEMENT

Configuration example 1: SF510 | M25 | W | P01
Configuration example 2: SF535 | M60 | | P01

Element series and size

	SF2500	SF2501	SF2503	SF2504	SF2505	SF2510	SF2535	SF2540
SF503			•					
SF504				•				
SF505					•			
SF510	•	•				•		
SF535							•	
SF540								•

Filtration rating (filter media)

M25	Wire mesh 25 µm	**M90**	Wire mesh 90 µm
M60	Wire mesh 60 µm	**M250**	Wire mesh 250 µm

Seals and treatments — Filtration rating: Mxx | Pxx

		Mxx	Pxx
	Standard version	•	•
W	Compatible with fluids HFA-HFB-HFC	•	

Execution

- **P01** MP Filtri standard
- **Pxx** Customized

ACCESSORIES

Clogging indicators		page
VVA	Axial vacuum gauge	59
VVR	Radial vacuum gauge	59
VEA	Electrical vacuum indicator	58
VLA	Electrical / visual vacuum indicator	58

SF2500

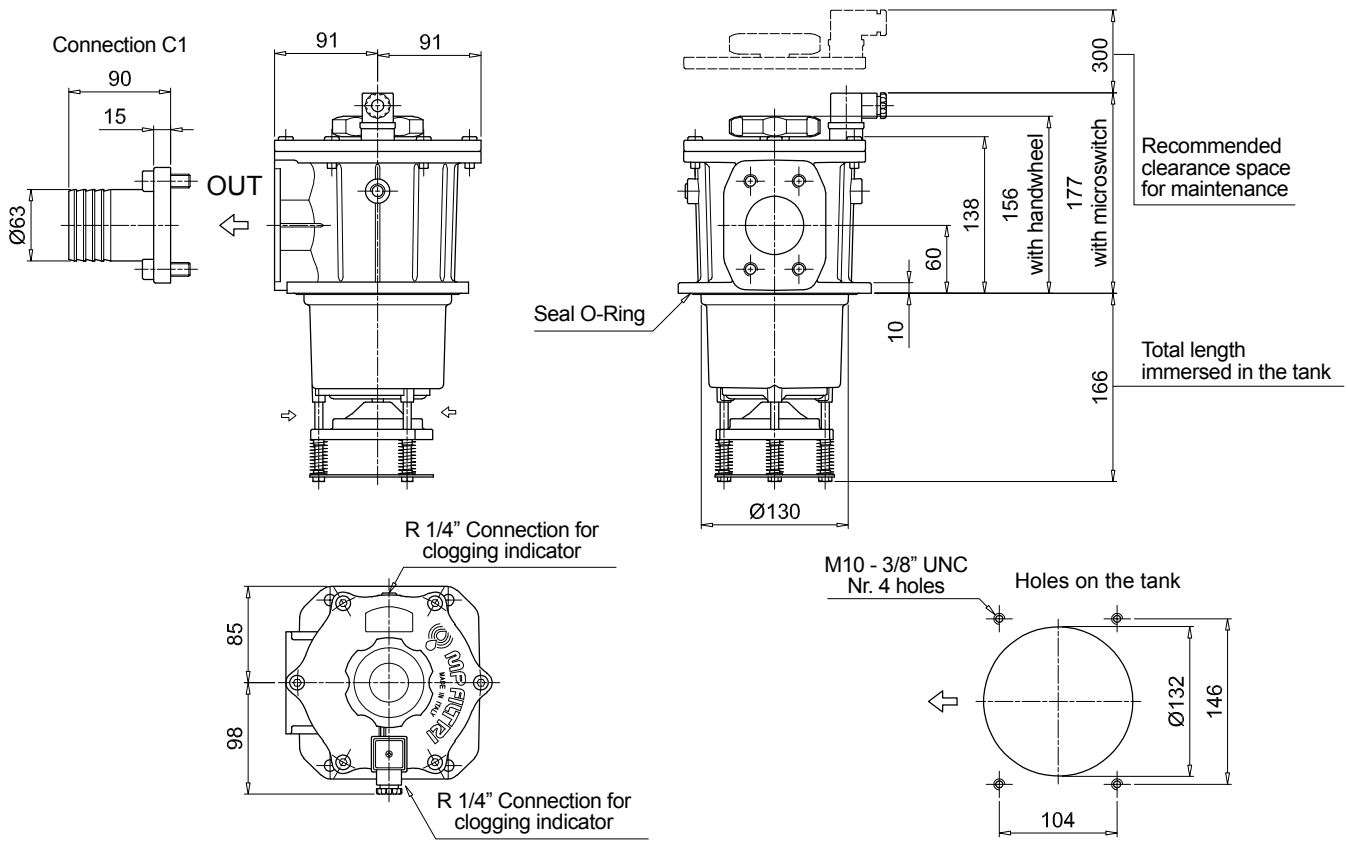

SF2501

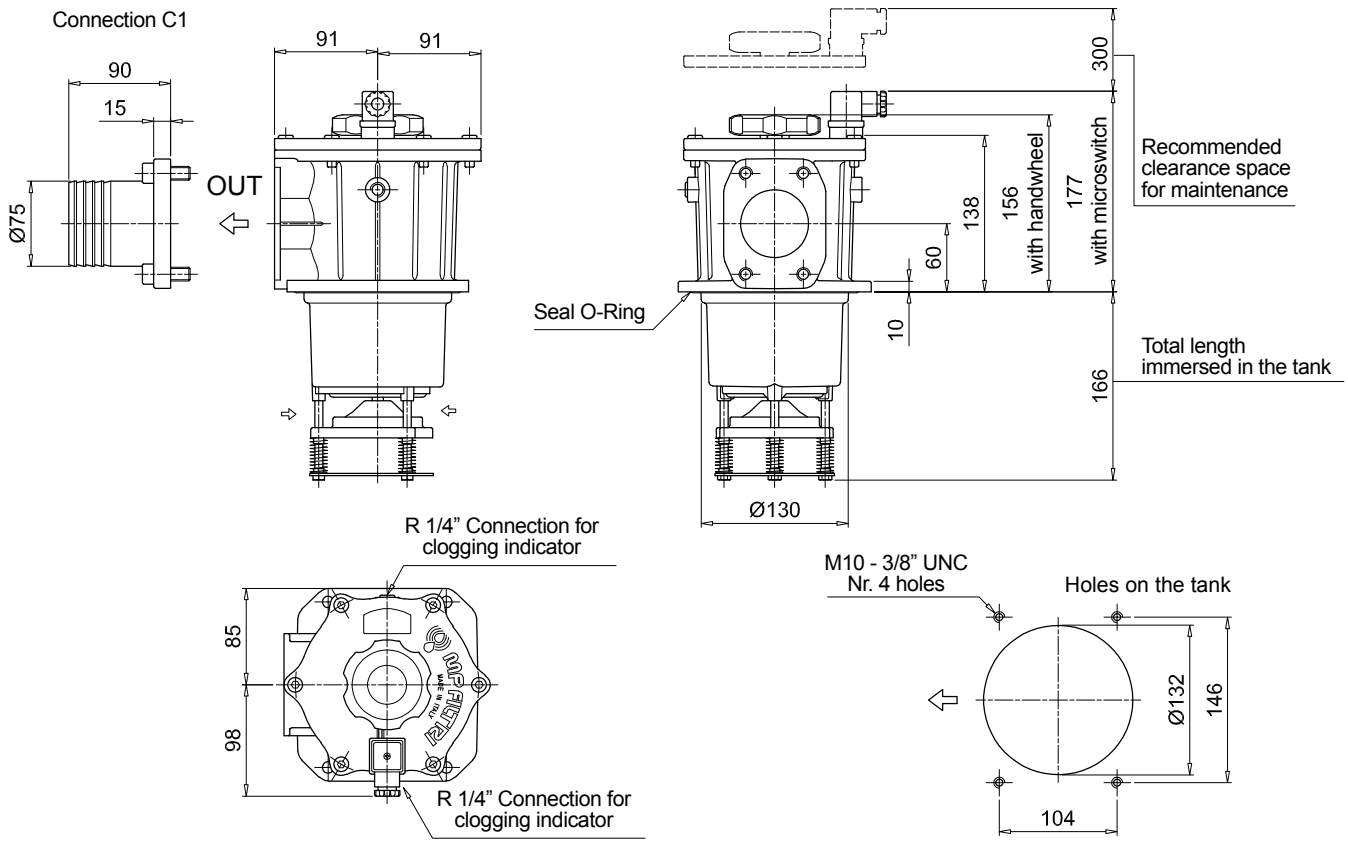

Dimensions

SF2503

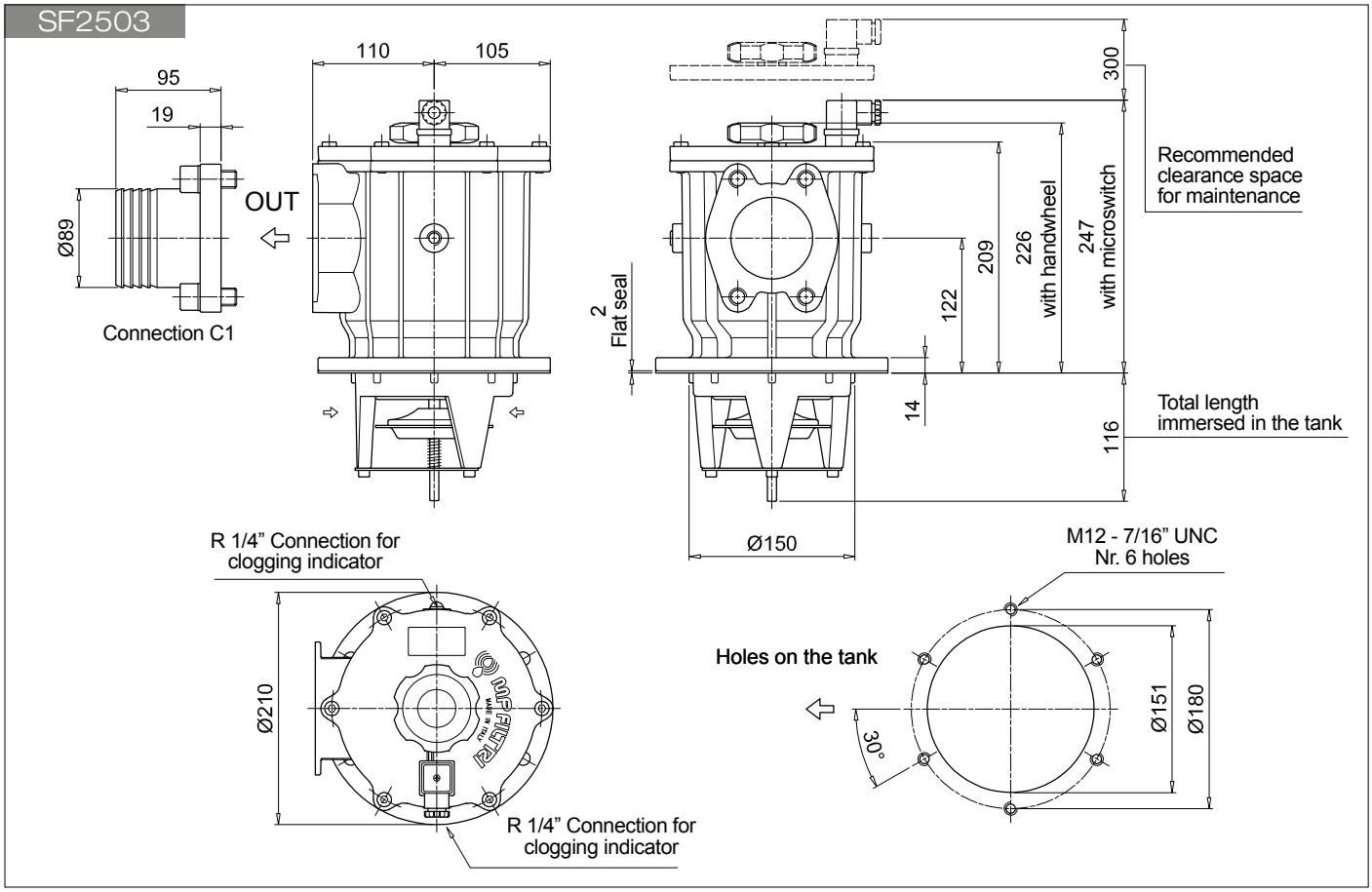

SF2504

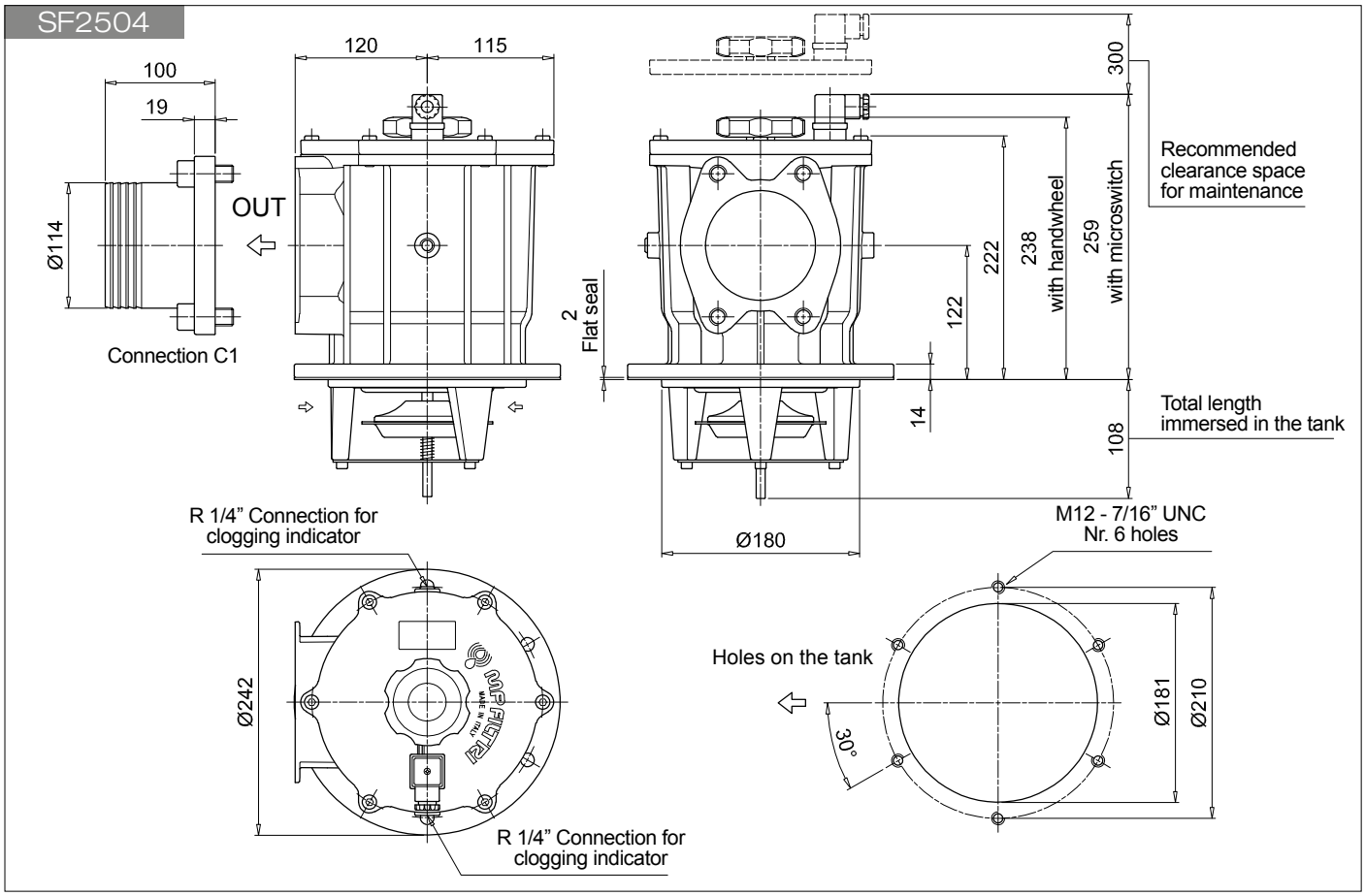

SF2505

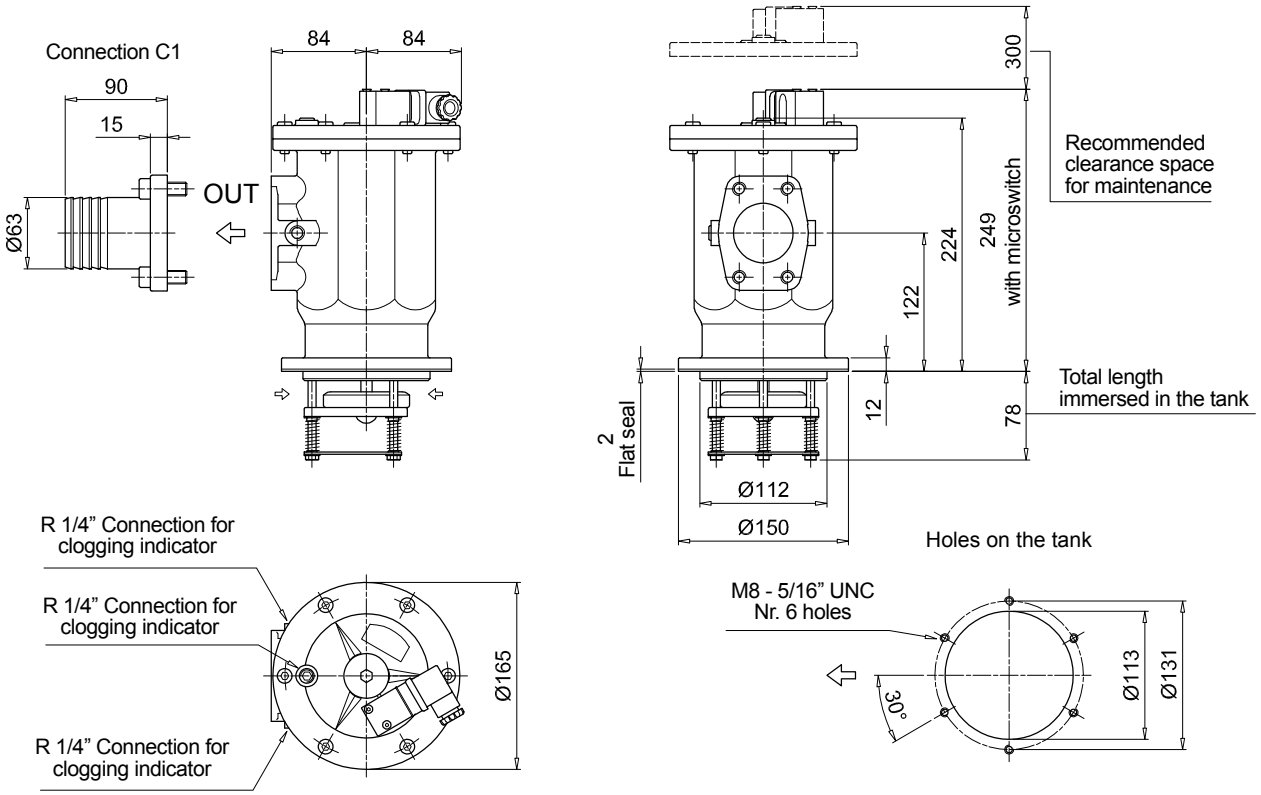

SF2510

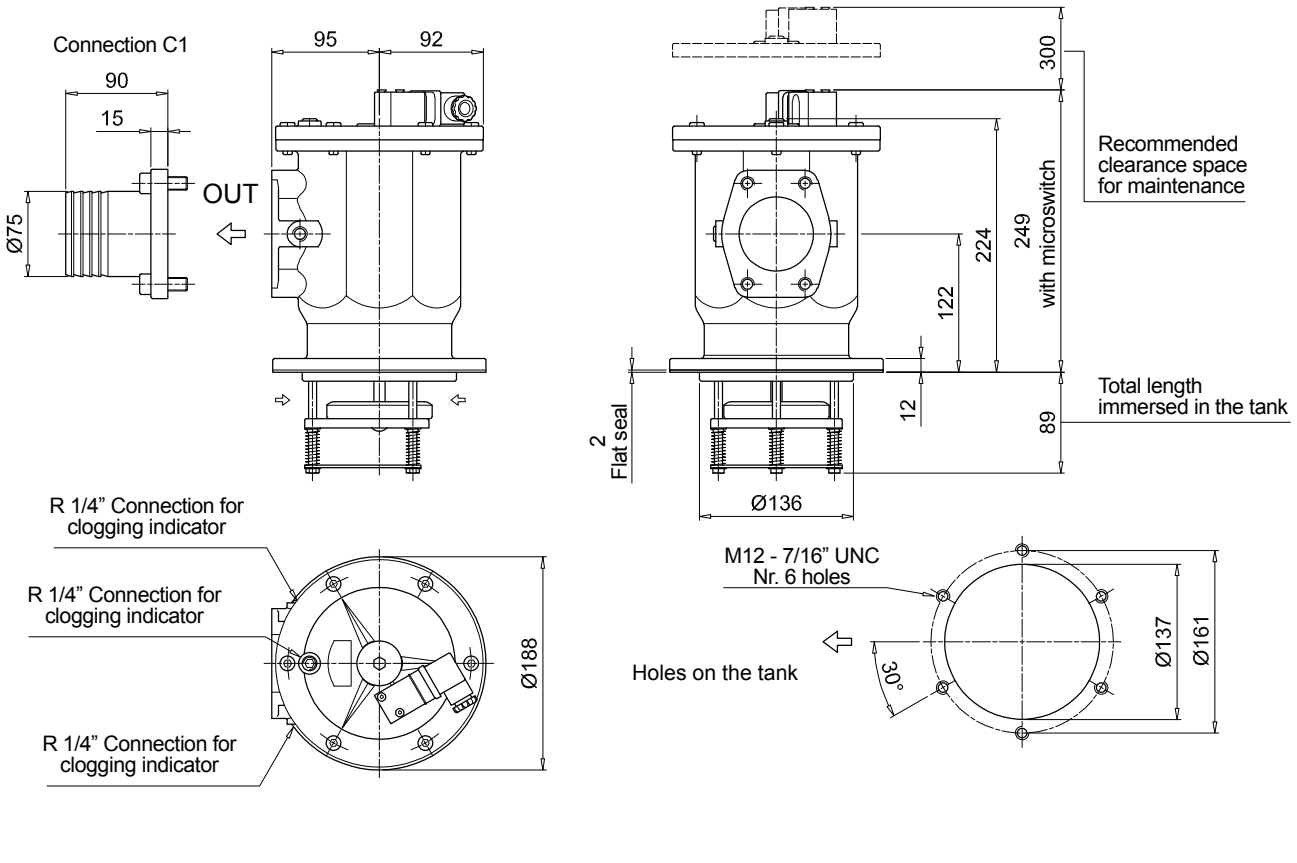

Dimensions

SF2535

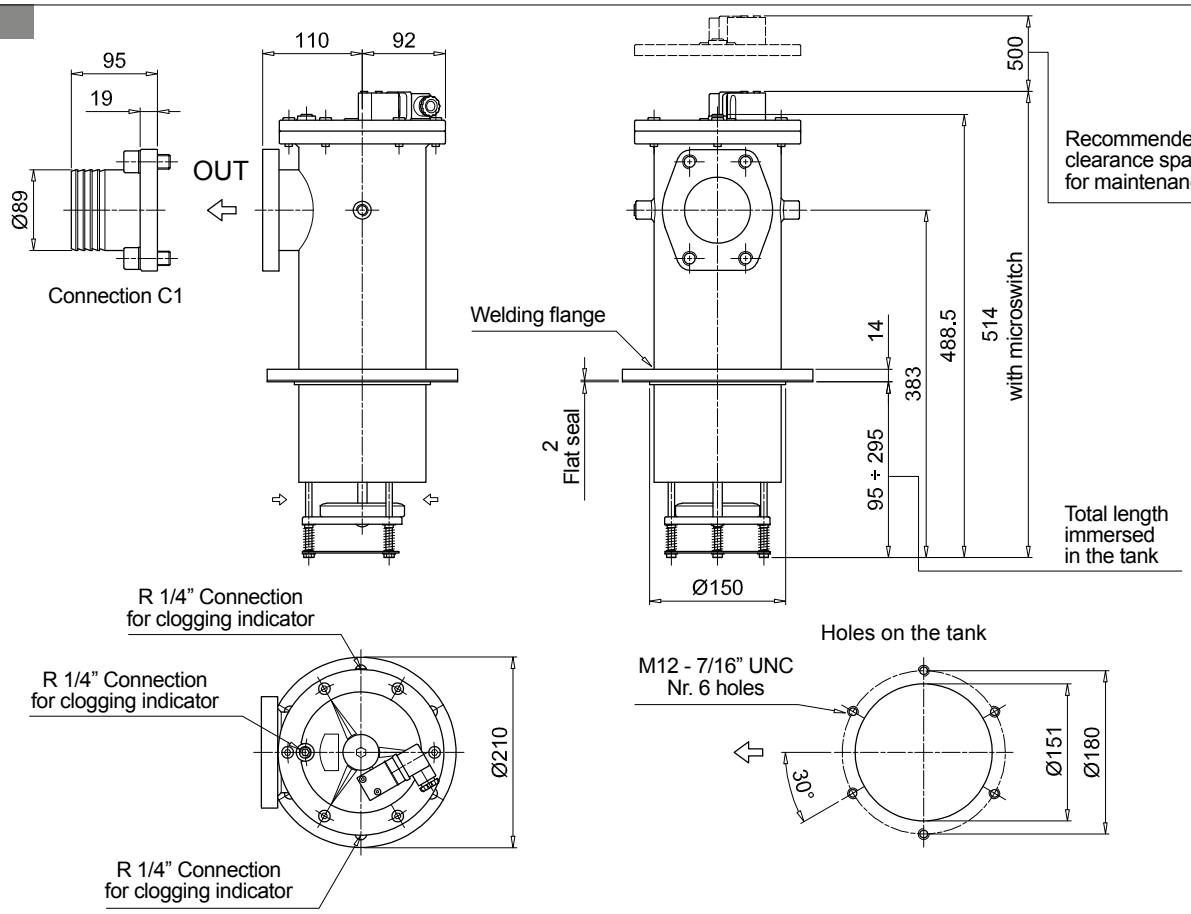

SF2540

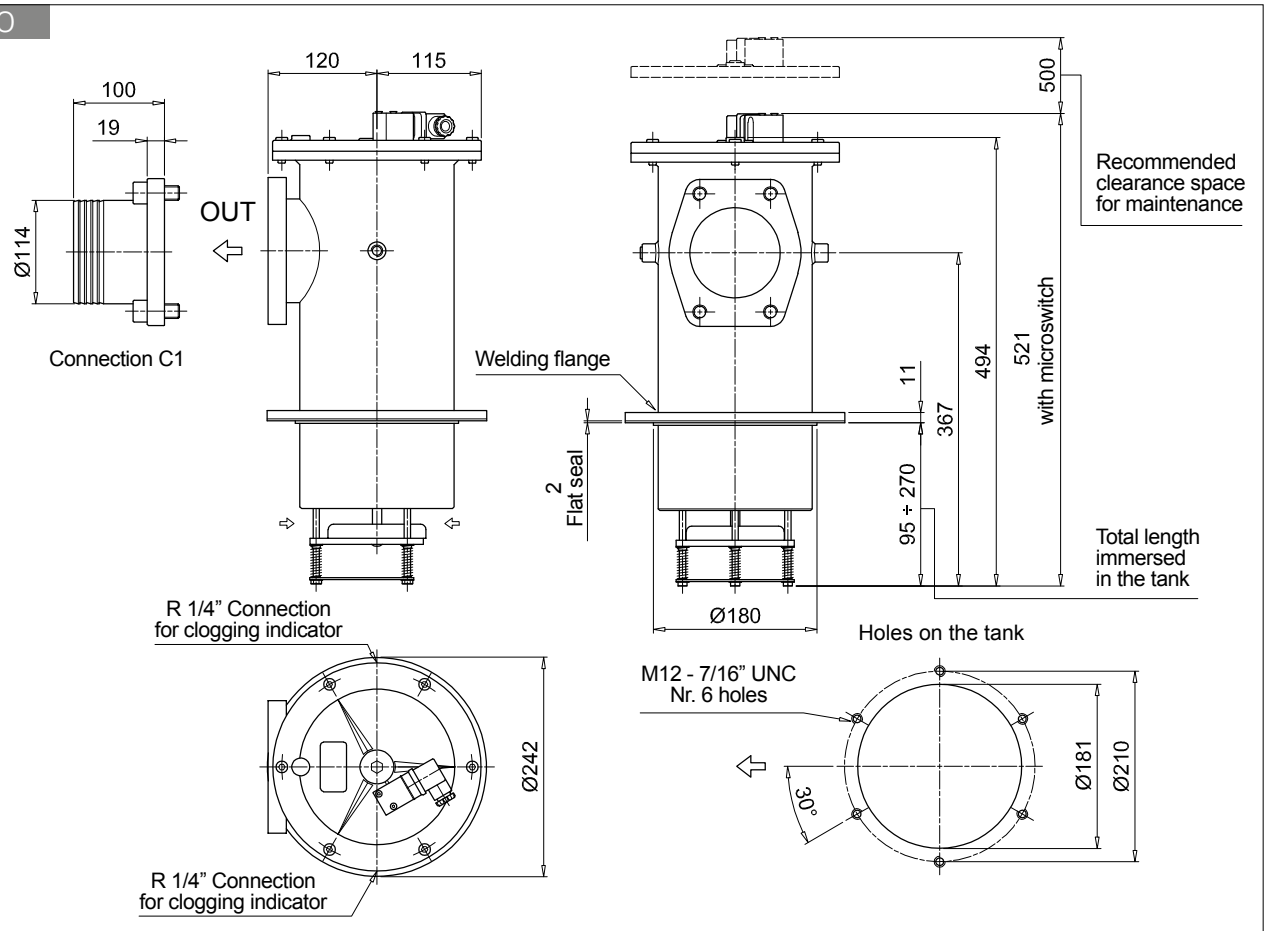

Order number for spare parts

SF2 500
SF2 501

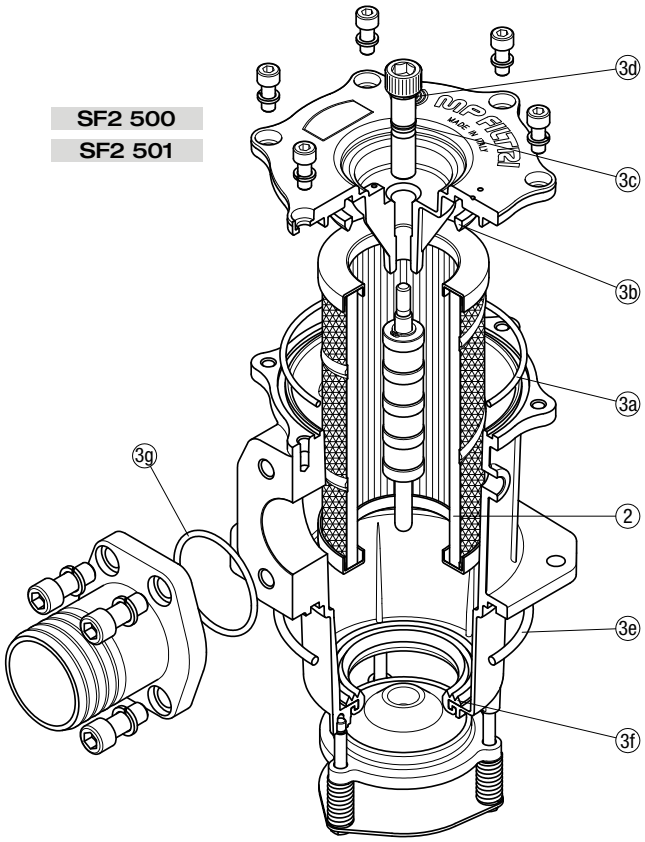

SF2 503
SF2 504

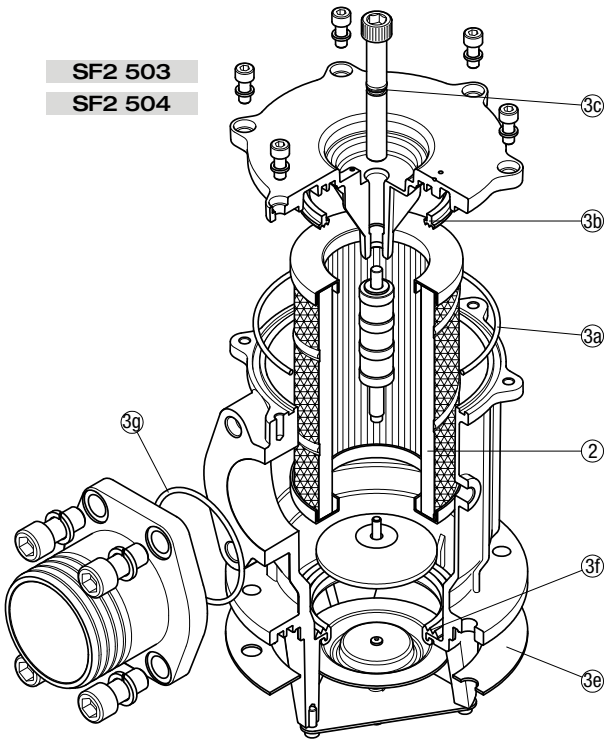

SF2 505
SF2 510
SF2 535
SF2 540

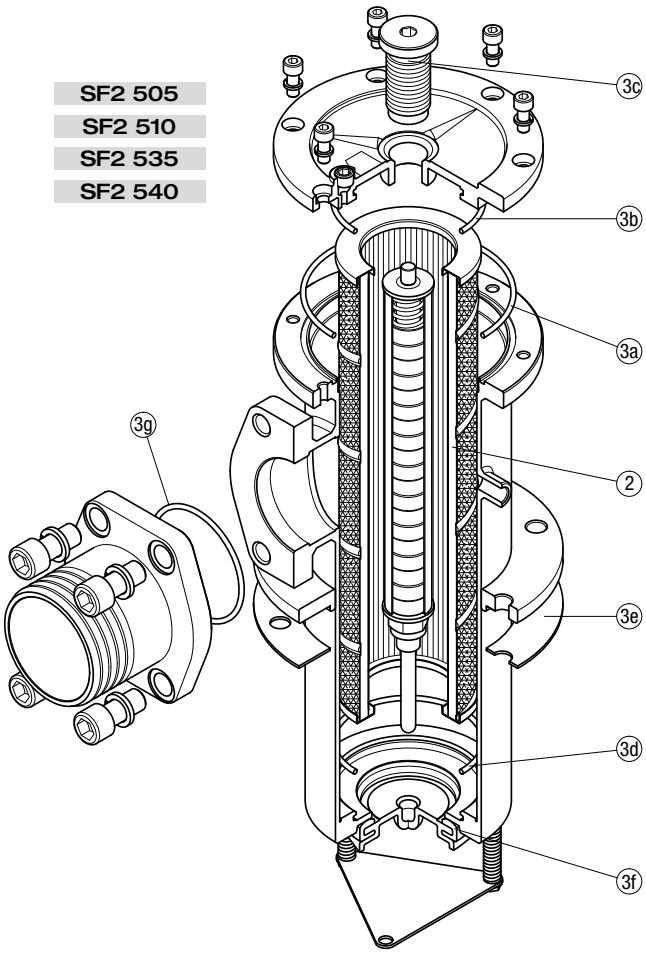

Item:	Q.ty: 1 pc. 2	Q.ty: 1 pc. 3 (3a ÷ 3g)	
Filter series	Filter element	Seal Kit code number NBR	FPM
SF2 500	See order table	02050141	02050142
SF2 501		02050143	02050144
SF2 503		02050070	02050071
SF2 504		02050072	02050073
SF2 505		02050043	02050044
SF2 510		02050045	02050046
SF2 535		02050051	02050052
SF2 540		02050053	02050054

Clogging indicators

Vacuum indicators

Introduction

Filter elements are efficient only if their Dirt Holding Capacity is fully exploited.
This is achieved by using filter housings equipped with clogging indicators.

These devices trip when the clogging of the filter element causes an increase in pressure drop across the filter element.

The indicator is set to alarm before the element becomes fully clogged.

MP Filtri can supply vacuum indicators with a visual, electrical or both signals.

Suitable indicator types

VACUUM INDICATORS

Vacuum indicators are used on the Suction line to check the efficiency of the filter element.
They measure the pressure downstream of the filter element.
Standard items are produced with R 1/4" EN 10226 connection.

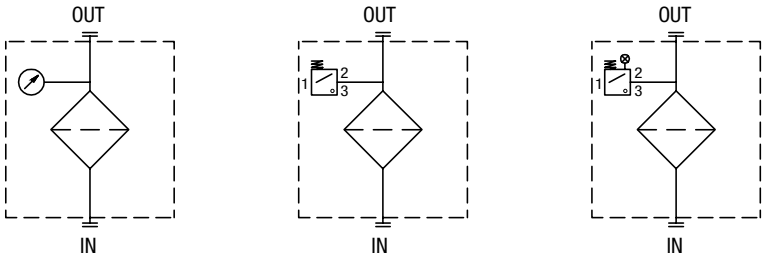

Quick reference guide

Filter series	Visual indicator	Electrical indicator	Electrical / Visual indicator
SF2 250 - 350 SF2 500 - 501 - 503 - 504 - 505 SF2 510 - 535 - 540	VVA16P01 VVR16P01	VEA21AA50P01	VLA21AA51P01 VLA21AA52P01 VLA21AA53P01 VLA21AA71P01

Dimensions

VE*50

Electrical Vacuum Indicator

R	Ordering code
EN 10226 - R1/4"	VE A 21 A A 50 P01

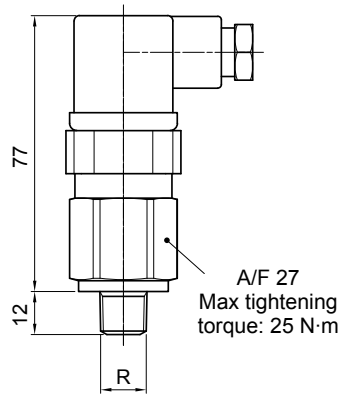

Hydraulic symbol

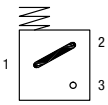

Electrical symbol

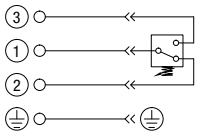

Materials
- Body: Brass
- Base: Black Nylon
- Contacts: Silver
- Seal: NBR

Technical data
- Vacuum setting: -0.21 bar ±10%
- Max working pressure: 10 bar
- Proof pressure: 15 bar
- Working temperature: From -25 °C to +80 °C
- Compatibility with fluids: Mineral oils, Synthetic fluids HFA, HFB, HFC according to ISO 2943
- Degree of protection: IP65 according to EN 60529

Electrical data
- Electrical connection: EN 175301-803
- Resistive load: 5 A / 14 Vdc; 4 A / 30 Vdc; 5 A / 125 Vac; 4 A / 250 Vac
- Available Atex product: II 1GD Ex ia IIC Tx Ex ia IIIC Tx°C X
- CE certification

VL*51 - VL*52 - VL*53

Electrical/Visual Vacuum Indicator

R	Ordering code
EN 10226 - R1/4"	VL A 21 A A xx P01

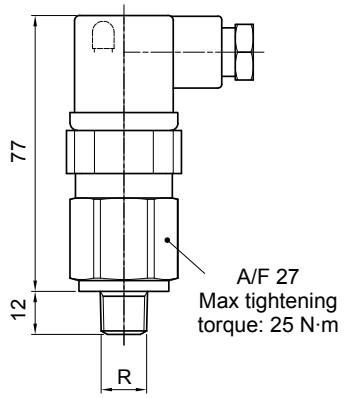

Hydraulic symbol

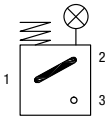

Electrical symbol

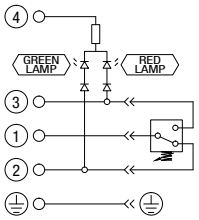

Materials
- Body: Brass
- Base: Transparent Nylon
- Contacts: Brass - Nylon
- Seal: NBR

Technical data
- Vacuum setting: -0.21 bar ±10%
- Max working pressure: 10 bar
- Proof pressure: 15 bar
- Working temperature: From -25 °C to +80 °C
- Compatibility with fluids: Mineral oils, Synthetic fluids HFA, HFB, HFC according to ISO 2943
- Degree of protection: IP65 according to EN 60529

Electrical data

- Electrical connection:	EN 175301-803		
- Type	51	52	53
- Lamps	24 Vdc	110 Vdc	230 Vac
- Resistive load:	1 A / 24 Vdc	1 A / 110 Vdc	1 A / 230 Vac

VL*71

Electrical/Visual Vacuum Indicator

Connections	Indicator code
EN 10226 - R1/4"	VL A 21 A A 71 P01

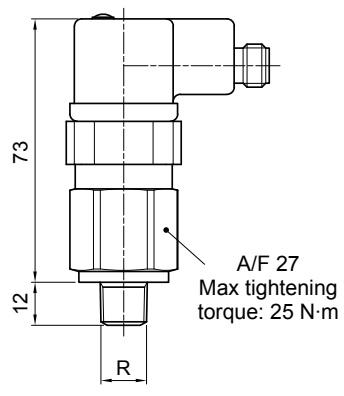

Hydraulic symbol

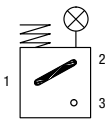

Electrical symbol

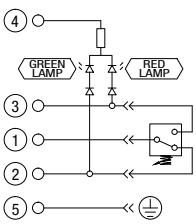

Materials
- Body: Brass
- Base: Black Nylon
- Contacts: Silver
- Seal: NBR

Technical data
- Vacuum setting: -0.21 bar ±10%
- Max working pressure: 10 bar
- Proof pressure: 15 bar
- Working temperature: From -25 °C to +80 °C
- Compatibility with fluids: Mineral oils, Synthetic fluids HFA, HFB, HFC according to ISO 2943
- Degree of protection: IP65 according to EN 60529

Electrical data
- Electrical connection: IEC 61076-2-101 D (M12)
- Lamps 24 Vdc
- Resistive load: 0.4 A / 24 Vdc

VVA

Axial Vacuum Gauge

R	Ordering code
EN 10226 - R1/4"	VV A 16 P01

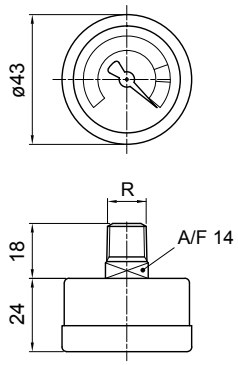

Hydraulic symbol



Dial scale

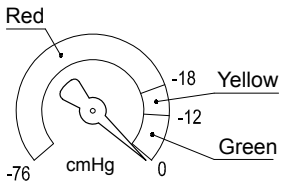

Conversion to SI units

[cmHg]	[bar]
-12	-0.16
-18	-0.24
-76	-1.01

Materials

- Case: Painted Steel
- Window: Transparent plastic
- Dial: Painted Steel
- Pointer: Painted Aluminium
- Pressure connection: Brass
- Pressure element: Bourdon tube Cu-alloy soft soldered

Technical data

- Max working pressure: Static: 7 bar; Fluctuating: 6 bar; Short time: 10 bar
- Working temperature: From -40 °C to +60 °C
- Compatibility with fluids: Mineral oils, Synthetic fluids; HFA, HFB, HFC according to ISO 2943
- Accuracy: Class 2.5 according to EN 13190
- Degree of protection: IP31 according to EN 60529

VVR

Radial Vacuum Gauge

R	Ordering code
EN 10226 - R1/4"	VV R 16 P01

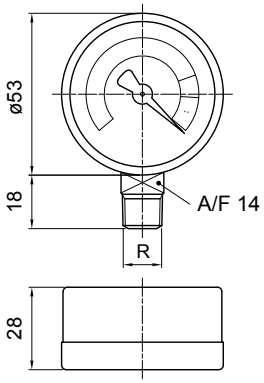

Hydraulic symbol



Dial scale

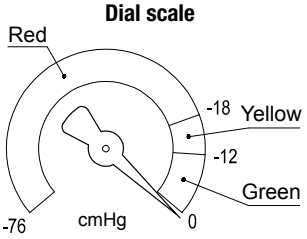

Conversion to SI units

[cmHg]	[bar]
-12	-0.16
-18	-0.24
-76	-1.01

Materials

- Case: Painted Steel
- Window: Transparent plastic
- Dial: Painted Steel
- Pointer: Painted Aluminium
- Pressure connection: Brass
- Pressure element: Bourdon tube Cu-alloy soft soldered

Technical data

- Max working pressure: Static: 7 bar; Fluctuating: 6 bar; Short time: 10 bar
- Working temperature: From -40 °C to +60 °C
- Compatibility with fluids: Mineral oils, Synthetic fluids; HFA, HFB, HFC according to ISO 2943
- Accuracy: Class 2.5 according to EN 13190
- Degree of protection: IP31 according to EN 60529

DESIGNATION & ORDERING CODE

Configuration example 1:	VE	A	21	A	A	50	P01
Configuration example 2:	VL	A	21	A	A	71	P01
Configuration example 3:	VV	R	16				P01

Series

VE Electrical vacuum indicator
VL Electrical/Visual vacuum indicator
VV Vacuum gauge

Type VE - VL

A Connection EN 10226 - R1/4"

Type VV

A Axial connection EN 10226 - R1/4"
R Radial connection EN 10226 - R1/4"

Vacuum setting	VE	VL	VV
16 -0.16 bar			•
21 -0.21 bar	•	•	

Seals	VE	VL	VV
A NBR	•	•	

Thermostat	VE	VL	VV
A Without	•	•	

Electrical connections	VE	VL	VV
50 Connection EN 175301-803	•		
51 Connection EN 175301-803, transparent base with lamps 24 Vdc		•	
52 Connection EN 175301-803, transparent base with lamps 110 Vdc		•	
53 Connection EN 175301-803, transparent base with lamps 230 Vdc		•	
71 Connection IEC 61076-2-101 D (M12), black base with lamps 24 Vdc		•	

Option

P01 MP Filtri standard
Pxx Customized

Return filters are used as process and safety filters to protect pumps and hydraulic circuits from contamination as per ISO 4406.

They are available in 8 styles:

- **MPFX-MPF tank top semi-immersed filter with external / internal oil flow; standard filter element disassembly**
- **MPLX tank top semi-immersed filter completely interchangeable with Pall 8420 & 8520, with external / internal oil flow; easy filter element disassembly**
- **MPTX-MPT tank top semi-immersed filter with external / internal oil flow; easy filter element disassembly without any specific tool**
- **MFBX-MFB element and bowl assembly with optional cover and hold-down spring for dirtbox or molded tank applications**
- **MPH tank top semi-immersed filter with internal / external oil flow, therefore keeping the dirt inside the bowl and not on the filter element; standard filter element disassembly, magnetic filter as option**
- **MPI semi-immersed filter element specifically designed to be mounted directly on the oil tank; magnetic filter as option**
- **FRI, the oldest tank top semi-immersed return filter manufactured by MP FILTRI, with external / internal oil flow; available in the single or duplex versions with outlet connection, it can be used also as in-line filter**
- **RF2 semi-immersed filter with shut-off valve for side tank mounting, with external / internal oil flow; easy filter element disassembly without any specific tool.**

FILTER SIZING

For the proper corrective factor Y see chapter at page 24

Return filters



MPFX	page 63
MPLX	91
MPTX	99
MFBX	117
MPF	125
MPT	153
MFB	171
MPH	page 179
MPI	203
FRI	215
RF2	231
INDICATORS	238
ACCESSORIES	248

MYCLEAN

THE NEW FILTER CONCEPT

MPFX
MPLX
MPTX
MFBX
MFX
series

NEW FILTER ELEMENT WITH EXCLUSIVE INTERFACE CONNECTION

- **Protects the machine from improper use of non-original products.**
- **Safety of constant quality protection & reliability**

With exclusive filter element you are sure that only MP Filtri filter elements can be used, ensuring the best cleaning level of the oil due to the use of originals filter elements.





Filter element featuring our UNIQUE end cap with polygonal design.



UNIQUE polygonal spigot fitting within the filter bowl.

The products identified as MPFX, MPLX, MPTX, MFBX and MFX are protected by:

Italian Patent n° 102014902261205
Canadian Patent n° 2,937,258

and by the following patent applications:

European Patent n° 16181725.9
US Patent Pending n° 15/224,337

MPFX series

Maximum working pressure up to 800 kPa (8 bar) - Flow rate up to 900 l/min



MPFX GENERAL INFORMATION

Description

Return filter

Maximum working pressure up to 800 kPa (8 bar)
Flow rate up to 900 l/min

MPFX is a range of return filters for protection of the reservoir against the system contamination.
They are directly fixed to the reservoir, in immersed or semi-immersed position.
The filter output must be always immersed into the fluid to avoid aeration or foam generation into the reservoir.

Available features:
- Female threaded connections up to 2" and flanged connections up to 2", for a maximum flow rate of 900 l/min
- Multiple connections, to connect several return lines or drains
- Fine filtration rating, to get a good cleanliness level into the reservoir
- Bypass valve integrated into the filter element, to relieve excessive pressure drop across the filter media
- 2, 3 or 4 fixing holes for installation, to suit a variety of reservoir surfaces
- O-ring or Flat Seal to suit a variety of reservoir surfaces
- Oil dipstick, to easily check the level of the fluid into the reservoir (sold as separate item)
- Extension tube, to be used in deep reservoirs (sold as separate item)
- Diffuser, to reduce the risk of aeration, foaming and noise (sold as separate item)
- Filler plug, to fill cleaned fluid into the tank without an additional connection
- Visual, electrical and electronic clogging indicators
- MYclean interface connection, to protect the product against non-original spare parts
- External protective wrap, to optimize the flow through the element and to save the element efficiency against non-proper handling

Common applications:
- Light Industrial equipment
- Mobile application

Technical data

Filter housing materials
- Head: Aluminium

- Cover
  Nylon: MPFX 030-100-104-110
  Aluminium: MPFX 181-182-184-191-192-194-400-410-450-451-750

- Bowl: Nylon

Bypass valve
- Opening pressure 175 kPa (1.75 bar) ±10%
- Opening pressure 300 kPa (3 bar) ±10%

Δp element type
- Microfiber filter elements - series H: 10 bar
- Fluid flow through the filter element from OUT to IN

Seals
- Standard NBR series A
- Optional FPM series V

Temperature
From -25 °C to +110 °C

Note
MPFX filters are provided for vertical mounting



Weights [kg] and volumes [dm³]

Filter series	Weights [kg]					Volumes [dm³]				
	Length	1	2	3	4	Length	1	2	3	4
MPFX 030		0.40	-	-	-		0.29	-	-	-
MPFX 100		0.61	0.64	0.67	0.74		0.64	0.85	1.20	1.65
MPFX 104		0.82	0.96	1.02	1.25		0.64	0.85	1.20	1.65
MPFX 110		0.64	0.68	0.71	0.78		-	-	-	-
MPFX 181		2.20	3.00	-	-		2.50	4.00	-	-
MPFX 182		2.30	3.10	-	-		2.50	4.00	-	-
MPFX 184		2.55	3.45	-	-		2.65	4.45	-	-
MPFX 191		-	3.00	-	-		-	4.25	-	-
MPFX 192		-	3.10	-	-		-	4.25	-	-
MPFX 194		-	3.45	-	-		-	4.45	-	-
MPFX 400		3.35	3.65	3.90	-		3.70	4.60	5.40	-
MPFX 410		3.55	3.85	4.10	-		3.70	4.60	5.40	-
MPFX 450-451		3.95	4.25	4.50	-		3.70	4.60	5.40	-
MPFX 750		6.30	-	-	-		8.45	-	-	-

FILTER ASSEMBLY SIZING
Flow rates [l/min]

Filter series	Length	Filter element design - H series					Filter element design - N series		
		A03	A06	A10	A16	A25	M25 M60 M90	P10	P25
MPFX 030	**1**	7	10	24	29	47	84	60	66
MPFX 100-104-110	**1**	18	20	53	56	65	153	87	96
	2	28	38	65	75	95	158	111	123
	3	48	55	125	135	169	289	224	251
	4	79	89	180	185	198	306	264	289
MPFX 181-182-184	**1**	127	148	235	243	278	441	285	299
	2	231	262	358	382	388	472	404	412
MPFX 191-192-194	**2**	261	305	489	528	546	696	583	598
MPFX 400	**1**	150	171	294	304	350	585	370	390
	2	237	252	454	462	589	868	619	645
	3	248	288	553	609	621	885	680	703
MPFX 410	**1**	146	167	277	285	325	512	341	357
	2	226	239	396	402	485	644	503	519
	3	236	269	462	497	505	653	539	553
MPFX 450-451	**1**	150	171	294	304	350	585	370	390
	2	237	252	454	462	589	868	619	645
	3	248	288	553	609	621	885	680	703
MPFX 750	**1**	392	465	623	700	769	929	804	819

Maximum flow rate for a complete return filter with a pressure drop Δp = 0.5 bar.
The reference fluid has a kinematic viscosity of 30 mm^2/s (cSt) and a density of 0.86 kg/dm^3.
For different pressure drop or fluid viscosity we recommend to use our selection software available on www.mpfiltri.com.
You can also calculate the right size using the formulas present on the FILTER SIZING paragraph at the beginning of the full catalogue or at the beginning of the filter family brochure.
Please, contact our Sales Department for further additional information.

Hydraulic symbols

Filter series	Style 1 connection	Style 2 connections
MPFX 030	•	
MPFX 100	•	
MPFX 104	•	
MPFX 110		•
MPFX 181	•	
MPFX 182		•
MPFX 184	•	•
MPFX 191	•	
MPFX 192	•	
MPFX 194	•	•
MPFX 400	•	
MPFX 410		•
MPFX 450	•	
MPFX 451		•
MPFX 750	•	

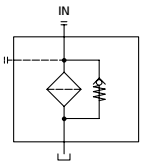

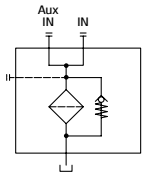

Pressure drop

Filter housings Δp pressure drop

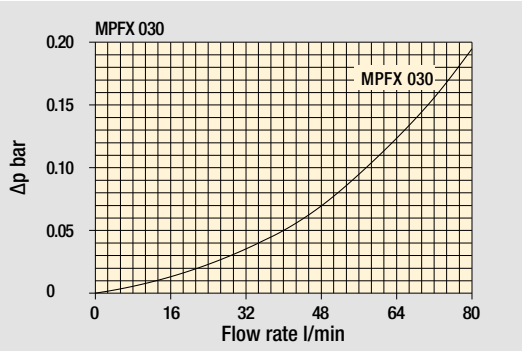

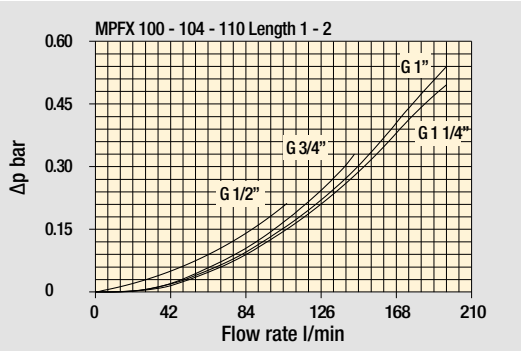

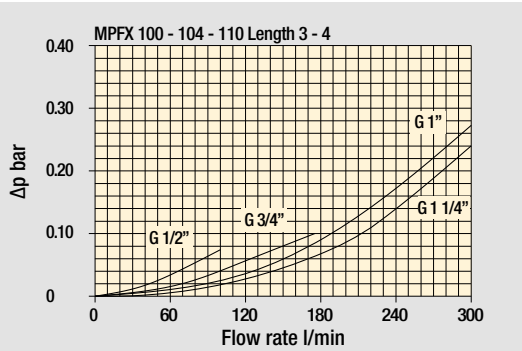

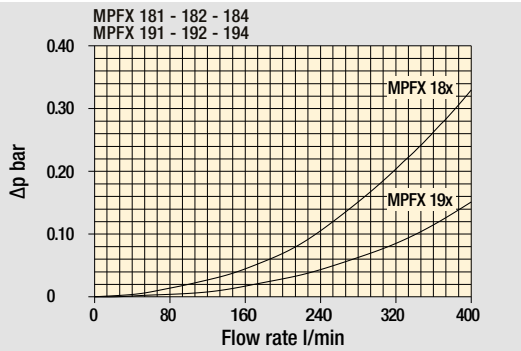

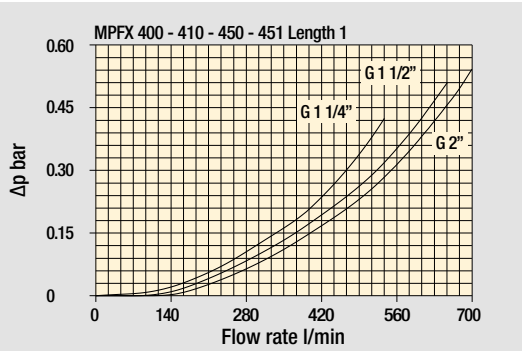

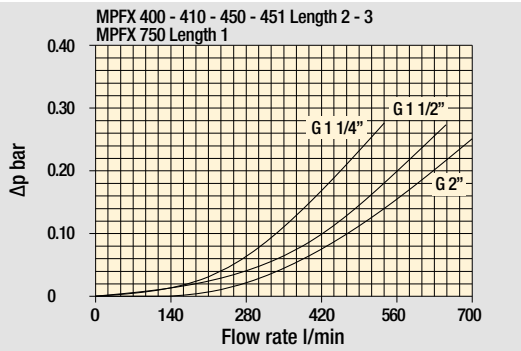

Bypass valve pressure drop

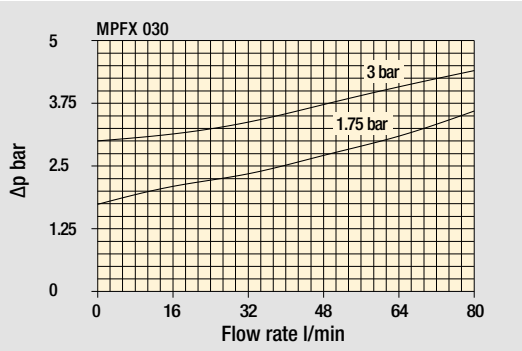

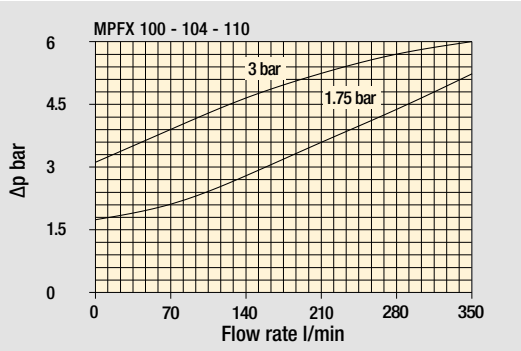

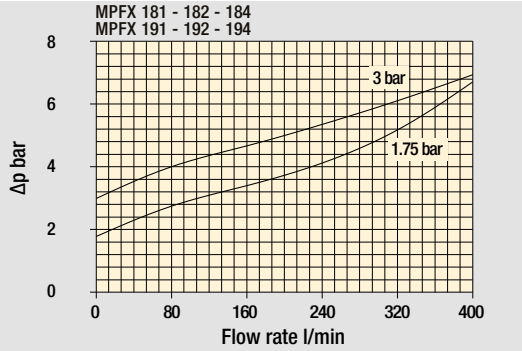

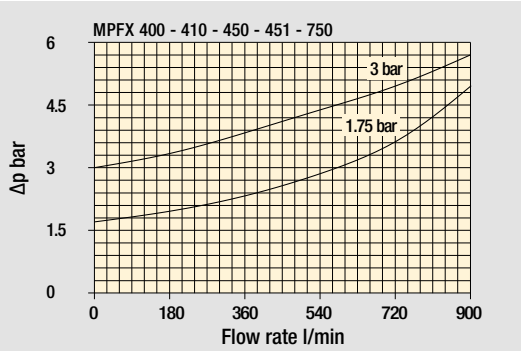

The curves are plotted using mineral oil with density of 0.86 kg/dm^3 in compliance with ISO 3968. Δp varies proportionally with density.

Standard - Single IN port



Double IN port
Option: double indicator port

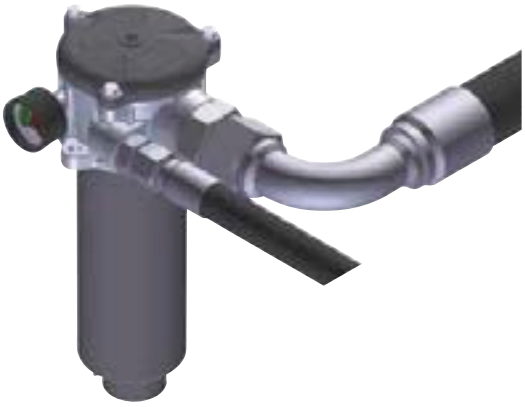

Double IN port - Drain port
Option: indicator port



Double IN port - Double drain port

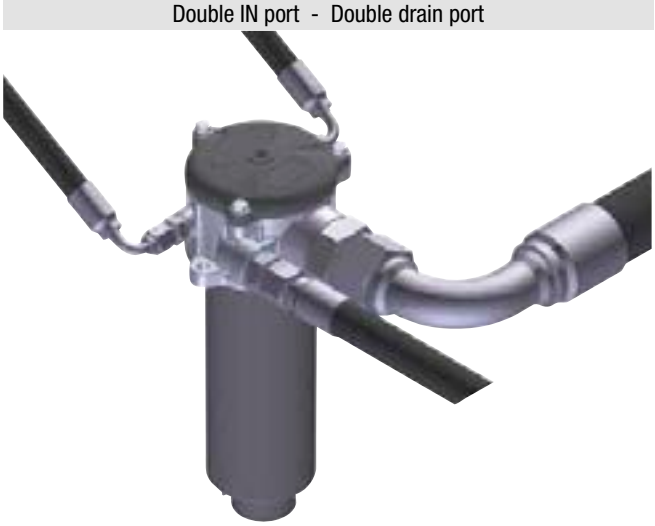

MPFX MPFX030

Designation & Ordering code

COMPLETE FILTER

Configuration example 1:	MPFX030	1	V	G1	M25	N	B	P01
Configuration example 2:	MPFX030	1	A	G4	A10	H	E	P01

Series and size

MPFX030 Filter element with private spigot

Length

1

Seals and treatments

A	NBR
V	FPM
W	NBR head anodized
Z	FPM head anodized

Connections

G1	G 1/2”
G4	1/2” NPT
G7	SAE 8 - 3/4” - 16 UNF

Filtration rating (filter media)

A03	Inorganic microfiber	**M25**	Wire mesh
A06	Inorganic microfiber	**M60**	Wire mesh
A10	Inorganic microfiber	**M90**	Wire mesh
A16	Inorganic microfiber	**P10**	Resin impregnated paper 10 µm
A25	Inorganic microfiber	**P25**	Resin impregnated paper

Element Δp		Filter media Axx	Mxx	Pxx
N	10 bar		•	•
H	10 bar	•		
W	10 bar, compatible with fluids HFA, HFB and HFC	•	•	

Bypass valve

E	3 bar
B	1.75 bar

Execution

P01	MP Filtri standard
Pxx	Customized

FILTER ELEMENT

Configuration example 1:	MFX030	1	M25	N	V		P01
Configuration example 2:	MFX030	1	A10	H	B	E	P01

Element series and size

MFX030 Filter element with private spigot

Element length

1

Filtration rating (filter media)

A03	Inorganic microfiber 3 µm	**M25**	Wire mesh 25 µm
A06	Inorganic microfiber 6 µm	**M60**	Wire mesh 60 µm
A10	Inorganic microfiber 10 µm	**M90**	Wire mesh 90 µm
A16	Inorganic microfiber 16 µm	**P10**	Resin impregnated paper 10 µm
A25	Inorganic microfiber 25 µm	**P25**	Resin impregnated paper 25 µm

Element Δp		Filter media Axx	Mxx	Pxx
N	10 bar		•	•
H	10 bar	•		
W	10 bar, compatible with fluids HFA, HFB and HFC	•	•	

Seals

B	NBR
V	FPM

Bypass valve

E	3 bar
	1.75 bar

Execution

P01	MP Filtri standard
Pxx	Customized

ACCESSORIES

Indicators		page
BVA	Axial pressure gauge	240
BVR	Radial pressure gauge	240
BVP	Visual pressure indicator with automatic reset	241
BVQ	Visual pressure indicator with manual reset	241

		page
BEA	Electrical pressure indicator	239
BEM	Electrical pressure indicator	239
BLA	Electrical / visual pressure indicator	239-240

Additional features		page
TE	Extension tube	248
T5	Filler plug M30x1.5	249

MPFX030

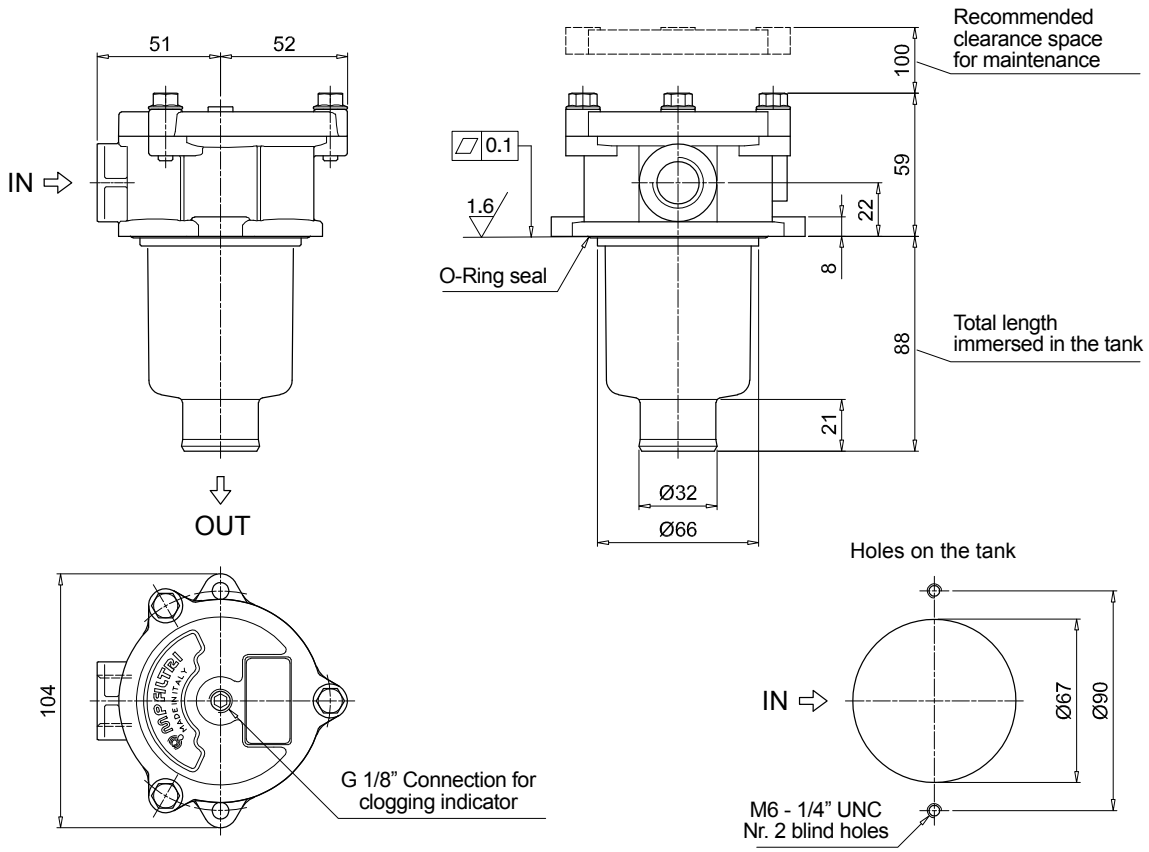
51
52
IN
OUT
0.1
1.6
O-Ring seal
Recommended
clearance space
for maintenance
100
59
22
8
88
Total length
immersed in the tank
21
Ø32
Ø66
104
G 1/8" Connection for
clogging indicator
Holes on the tank
IN
Ø67
Ø90
M6 - 1/4" UNC
Nr. 2 blind holes

MPFX MPFX100 - MPFX104

Designation & Ordering code

COMPLETE FILTER

Configuration example 1:	MPFX100	2	W	G3	A06	W	B	P01
Configuration example 2:	MPFX104	4	A	G8	P10	N	E	P01

Series and size

MPFX100 | **MPFX104** Filter element with private spigot

Length

1 | **2** | **3** | **4**

Seals and treatments

A	NBR	
V	FPM	
W	NBR	head anodized
Z	FPM	head anodized

Connections	Size 100	Size 104
G1 G 1/2”	•	•
G2 G 3/4”	•	•
G3 G 1”	•	•
G4 1/2” NPT	•	•
G5 3/4” NPT	•	•
G6 1” NPT	•	•

Connections	Size 100	Size 104
G7 SAE 8 - 3/4” - 16 UNF	•	•
G8 SAE 12 - 1 1/16” - 12 UN	•	•
G9 SAE 16 - 1 5/16” - 12 UN	•	•

Filtration rating (filter media)

A03	Inorganic microfiber 3 µm	**M25**	Wire mesh 25 µm
A06	Inorganic microfiber 6 µm	**M60**	Wire mesh 60 µm
A10	Inorganic microfiber 10 µm	**M90**	Wire mesh 90 µm
A16	Inorganic microfiber 16 µm	**P10**	Resin impregnated paper 10 µm
A25	Inorganic microfiber 25 µm	**P25**	Resin impregnated paper 25 µm

Element Δp	Filter media Axx	Mxx	Pxx
N 10 bar		•	•
H 10 bar	•		
W 10 bar, compatible with fluids HFA, HFB and HFC	•	•	

Bypass valve

E	3 bar
B	1.75 bar

Execution

P01	MP Filtri standard
Pxx	Customized

FILTER ELEMENT

Configuration example 1:	MFX100	2	A06	W	B		P01
Configuration example 2:	MFX100	4	P10	N	B	E	P01

Element series and size

MFX100 Filter element with private spigot

Element length

1 | **2** | **3** | **4**

Filtration rating (filter media)

A03	Inorganic microfiber 3 µm	**M25**	Wire mesh 25 µm
A06	Inorganic microfiber 6 µm	**M60**	Wire mesh 60 µm
A10	Inorganic microfiber 10 µm	**M90**	Wire mesh 90 µm
A16	Inorganic microfiber 16 µm	**P10**	Resin impregnated paper 10 µm
A25	Inorganic microfiber 25 µm	**P25**	Resin impregnated paper 25 µm

Element Δp	Filter media Axx	Mxx	Pxx
N 10 bar		•	•
H 10 bar	•		
W 10 bar, compatible with fluids HFA, HFB and HFC	•	•	

Seals

B	NBR
V	FPM

Bypass valve

E	3 bar
	1.75 bar

Execution

P01	MP Filtri standard
Pxx	Customized

ACCESSORIES

Indicators	page
BVA Axial pressure gauge	240
BVR Radial pressure gauge	240
BVP Visual pressure indicator with automatic reset	241
BVQ Visual pressure indicator with manual reset	241
BEA Electrical pressure indicator	239
BEM Electrical pressure indicator	239
BLA Electrical / visual pressure indicator	239-240

Additional features	page
TE Extension tube	248
DFS Diffuser with fast lock connection	249
T5 Filler plug M30x1.5	249
DPT Dipstick	249

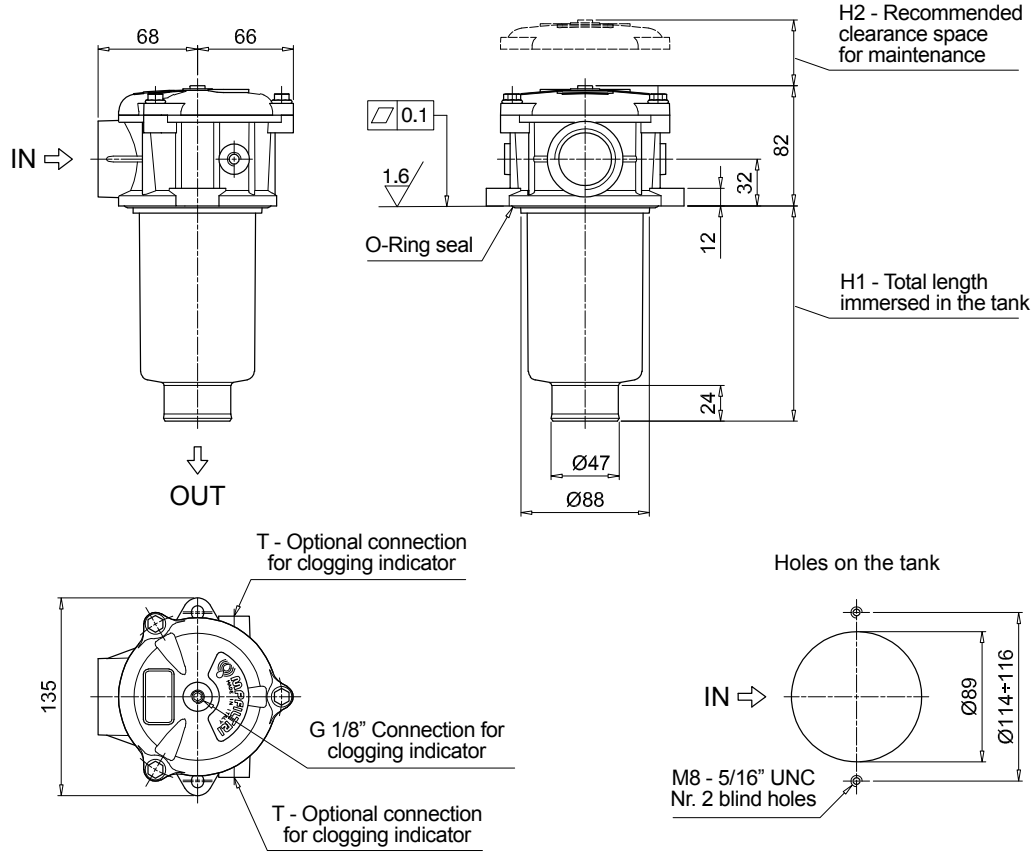

MPFX100

Filter length	H1 [mm]	H2 [mm]
1	102	120
2	147	170
3	225	250
4	327	350

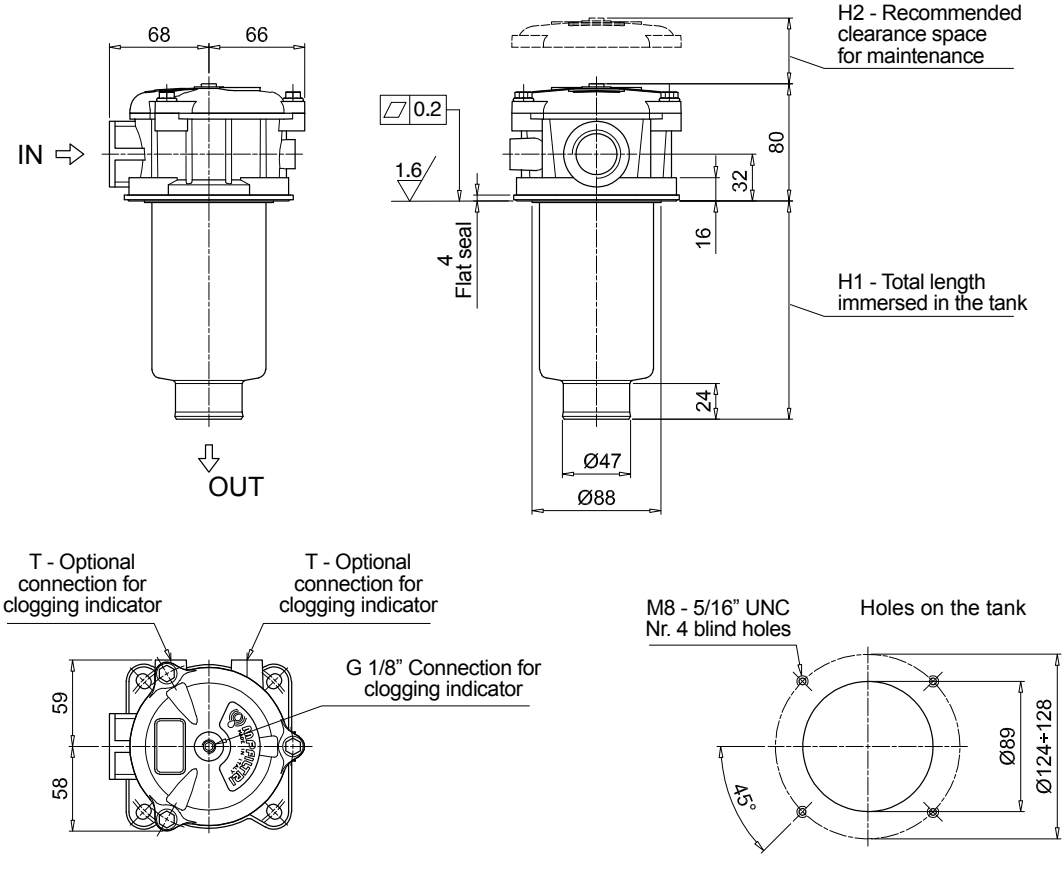

MPFX104

Filter length	H1 [mm]	H2 [mm]
1	100	120
2	145	170
3	223	250
4	325	350

MPFX MPFX110

Designation & Ordering code

COMPLETE FILTER

Configuration example 1:	MPFX110	3	Z	G4	2	M25	W	B	P01
Configuration example 2:	MPFX110	4	A	G8	1	P10	N	E	P01

Series and size

MPFX110 Filter element with private spigot

Length

1 | **2** | **3** | **4**

Seals and treatments

A	NBR	**W**	NBR head anodized
V	FPM	**Z**	FPM head anodized

Main Connections		Aux size 1	Aux size 2
G1	G 1/2"	G 3/8"	G 1/2"
G2	G 3/4"		
G3	G 1"		
G4	1/2" NPT	3/8" NPT	1/2" NPT
G5	3/4" NPT		
G6	1" NPT		
G7	SAE 8 - 3/4" - 16 UNF	SAE 6 - 9/16"- 18 UNF	SAE 8 - 3/4"- 16 UNF
G8	SAE 12 - 1 1/16" - 12 UN		
G9	SAE 16 - 1 5/16" - 12 UN		
G10	G 1 1/4"	G 3/8"	G 1/2"
G11	1 1/4" NPT	3/8" NPT	1/2" NPT
G12	SAE 20 - 1 5/8" - 12 UN	SAE 6 - 9/16"- 18 UNF	SAE 8 - 3/4"- 16 UNF

Aux connection - see previous table

1	Aux size 1	**2**	Aux size 2

Filtration rating (filter media)

A03	Inorganic microfiber 3 µm	**M25**	Wire mesh 25 µm
A06	Inorganic microfiber 6 µm	**M60**	Wire mesh 60 µm
A10	Inorganic microfiber 10 µm	**M90**	Wire mesh 90 µm
A16	Inorganic microfiber 16 µm	**P10**	Resin impregnated paper 10 µm
A25	Inorganic microfiber 25 µm	**P25**	Resin impregnated paper 25 µm

Element Δp		Filter media Axx	Mxx	Pxx
N	10 bar		•	•
H	10 bar	•		
W	10 bar, compatible with fluids HFA, HFB and HFC	•	•	

Bypass valve

E	3 bar
B	1.75 bar

Execution

P01	MP Filtri standard
Pxx	Customized

FILTER ELEMENT

Configuration example 1:	MFX100	3	M25	W	V		P01
Configuration example 2:	MFX100	4	P10	N	B	E	P01

Element series and size

MFX100 Filter element with private spigot

Element length

1 | **2** | **3** | **4**

Filtration rating (filter media)

A03	Inorganic microfiber 3 µm	**M25**	Wire mesh 25 µm
A06	Inorganic microfiber 6 µm	**M60**	Wire mesh 60 µm
A10	Inorganic microfiber 10 µm	**M90**	Wire mesh 90 µm
A16	Inorganic microfiber 16 µm	**P10**	Resin impregnated paper 10 µm
A25	Inorganic microfiber 25 µm	**P25**	Resin impregnated paper 25 µm

Element Δp		Filter media Axx	Mxx	Pxx
N	10 bar		•	•
H	10 bar	•		
W	10 bar, compatible with fluids HFA, HFB and HFC	•	•	

Seals

B	NBR
V	FPM

Bypass valve

E	3 bar
	1.75 bar

Execution

P01	MP Filtri standard
Pxx	Customized

ACCESSORIES

Indicators		page
BVA	Axial pressure gauge	240
BVR	Radial pressure gauge	240
BVP	Visual pressure indicator with automatic reset	241
BVQ	Visual pressure indicator with manual reset	241
BEA	Electrical pressure indicator	239
BEM	Electrical pressure indicator	239
BLA	Electrical / visual pressure indicator	239-240

Additional features		page
TE	Extension tube	248
DFS	Diffuser with fast lock connection	249
T5	Filler plug M30x1.5	249
DPT	Dipstick	249

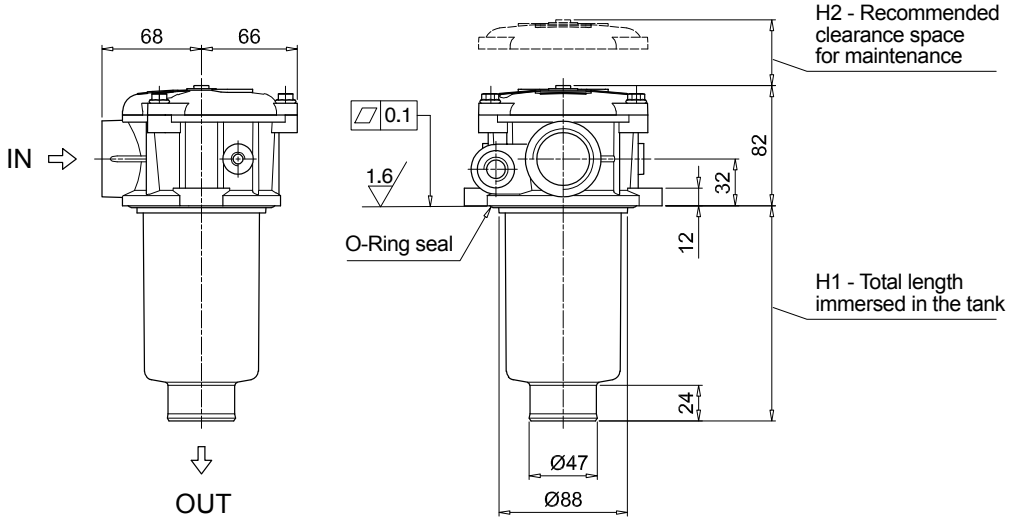

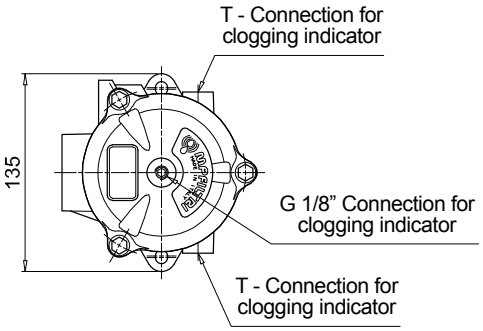

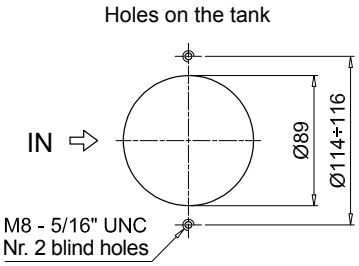

MPFX110		
Filter length	**H1 [mm]**	**H2 [mm]**
1	102	120
2	147	170
3	225	250
4	327	350

Connections	**T**
G1-G2-G3	G 1/8"
G4-G5-G6-G7-G8-G9	1/8" NPT
G10	G 1/8"
G11-G12	1/8" NPT

MPFX MPFX181 - MPFX191

Designation & Ordering code

COMPLETE FILTER

Configuration example 1: MPFX181 | 1 | A | G1 | A25 | H | E | P01
Configuration example 2: MPFX191 | 2 | V | G2 | P10 | N | B | P01

Series and size

MPFX181 | **MPFX191** Filter element with private spigot

Length	Size 181	Size 191
1	•	
2	•	•

Seals and treatments

A	NBR		**B**	NBR	flat seal on head
V	FPM		**D**	FPM	flat seal on head
W	NBR	head anodized	**L**	NBR	head anodized, flat seal on head
Z	FPM	head anodized	**M**	FPM	head anodized, flat seal on head

Connections

G1	G 1 1/4”	**G5**	1 1/2” NPT
G2	G 1 1/2”	**G7**	SAE 20 - 1 5/8” - 12 UN
G4	1 1/4” NPT	**G8**	SAE 24 - 1 7/8” - 12 UN

Filtration rating (filter media)

A03	Inorganic microfiber 3 µm	**M25**	Wire mesh 25 µm
A06	Inorganic microfiber 6 µm	**M60**	Wire mesh 60 µm
A10	Inorganic microfiber 10 µm	**M90**	Wire mesh 90 µm
A16	Inorganic microfiber 16 µm	**P10**	Resin impregnated paper 10 µm
A25	Inorganic microfiber 25 µm	**P25**	Resin impregnated paper 25 µm

		Filter media		
Element Δp		Axx	Mxx	Pxx
N	10 bar		•	•
H	10 bar	•		
W	10 bar, compatible with fluids HFA, HFB and HFC	•	•	

Bypass valve

E	3 bar
B	1.75 bar

Execution

P01	MP Filtri standard
Pxx	Customized

FILTER ELEMENT

Configuration example 1: MFX180 | 1 | A25 | H | B | E | P01
Configuration example 2: MFX180 | 2 | P10 | N | V | | P01

Element series and size

MFX180 Filter element with private spigot

Element length

1

2

Filtration rating (filter media)

A03	Inorganic microfiber 3 µm	**M25**	Wire mesh 25 µm
A06	Inorganic microfiber 6 µm	**M60**	Wire mesh 60 µm
A10	Inorganic microfiber 10 µm	**M90**	Wire mesh 90 µm
A16	Inorganic microfiber 16 µm	**P10**	Resin impregnated paper 10 µm
A25	Inorganic microfiber 25 µm	**P25**	Resin impregnated paper 25 µm

		Filter media		
Element Δp		Axx	Mxx	Pxx
N	10 bar		•	•
H	10 bar	•		
W	10 bar, compatible with fluids HFA, HFB and HFC	•	•	

Seals

B	NBR
V	FPM

Bypass valve

E	3 bar
	1.75 bar

Execution

P01	MP Filtri standard
Pxx	Customized

ACCESSORIES

Indicators		page
BVA	Axial pressure gauge	240
BVR	Radial pressure gauge	240
BVP	Visual pressure indicator with automatic reset	241
BVQ	Visual pressure indicator with manual reset	241

Additional features		page
TE	Extension tube	248
T5	Filler plug M30x1.5	249

		page
BEA	Electrical pressure indicator	239
BEM	Electrical pressure indicator	239
BLA	Electrical / visual pressure indicator	239-240

Dimensions

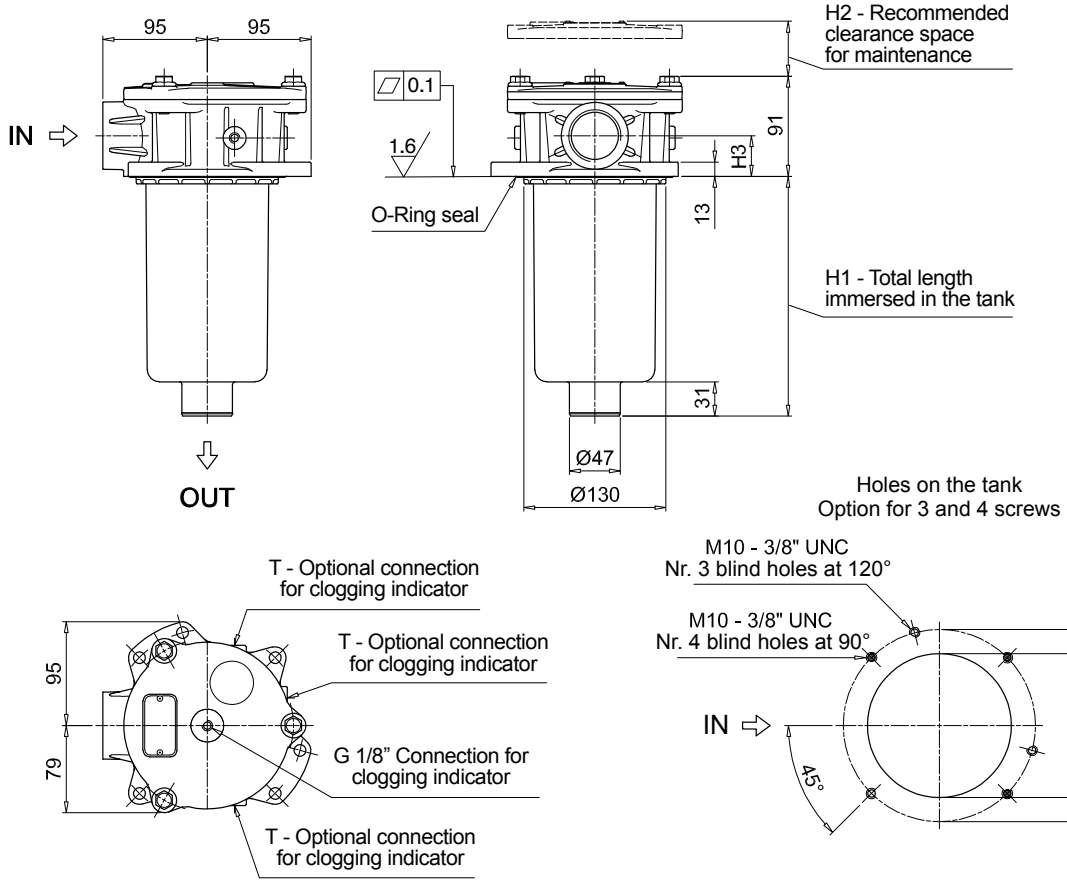

MPFX181

Filter length	H1 [mm]	H2 [mm]
1	235	255
2	448	475

Connections	H3 [mm]
G1 - G4 - G7	35
G2 - G5 - G8	37

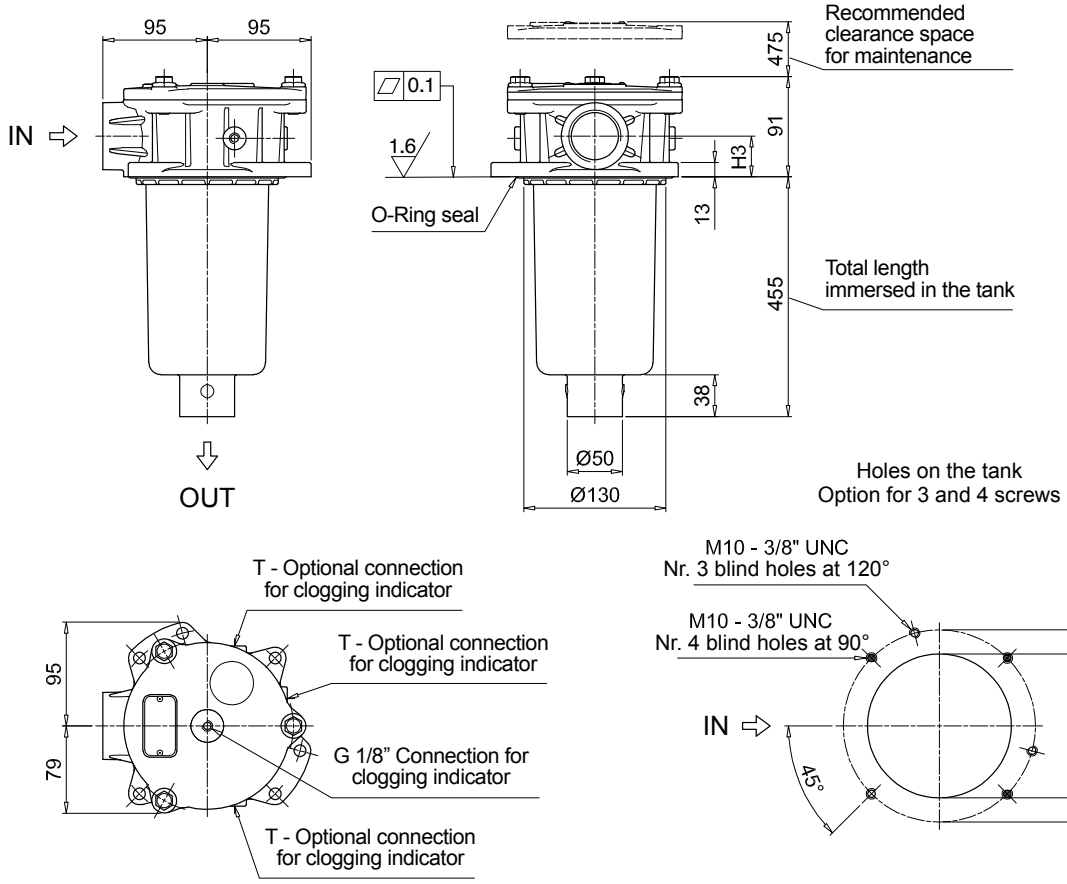

MPFX191

Connections	H3 [mm]
G1 - G4 - G7	35
G2 - G5 - G8	37

Designation & Ordering code

COMPLETE FILTER

Configuration example 1:	MPFX182	1	A	G1	1	A25	H	E	P01
Configuration example 2:	MPFX192	2	V	G4	2	P10	N	B	P01

Series and size

MPFX182 | **MPFX192** Filter element with private spigot

Length

	Size 182	Size 192
1	•	
2	•	•

Seals and treatments

A	NBR		**B**	NBR	flat seal on head
V	FPM		**D**	FPM	flat seal on head
W	NBR	head anodized	**L**	NBR	head anodized, flat seal on head
Z	FPM	head anodized	**M**	FPM	head anodized, flat seal on head

Main Connections

		Aux size 1	Aux size 2
G1	G 1 1/4"	G 1/2"	G 3/4"
G4	1 1/4" NPT	1/2" NPT	3/4" NPT
G7	SAE 20 - 1 5/8" - 12 UN	SAE 8 - 3/16"- 16 UNF	SAE 12 - 1 1/16"- 12 UN

Aux connection - see previous table

1	Aux size 1	**2**	Aux size 2

Filtration rating (filter media)

A03	Inorganic microfiber 3 µm	**M25**	Wire mesh 25 µm
A06	Inorganic microfiber 6 µm	**M60**	Wire mesh 60 µm
A10	Inorganic microfiber 10 µm	**M90**	Wire mesh 90 µm
A16	Inorganic microfiber 16 µm	**P10**	Resin impregnated paper 10 µm
A25	Inorganic microfiber 25 µm	**P25**	Resin impregnated paper 25 µm

Element Δp	Filter media Axx	Mxx	Pxx
N 10 bar		•	•
H 10 bar	•		
W 10 bar, compatible with fluids HFA, HFB and HFC	•	•	

Bypass valve

E	3 bar
B	1.75 bar

Execution

P01	MP Filtri standard
Pxx	Customized

FILTER ELEMENT

Configuration example 1:	MFX180	1	A25	H	B	E	P01
Configuration example 2:	MFX180	2	P10	N	V		P01

Element series and size

MFX180 Filter element with private spigot

Element length

1

2

Filtration rating (filter media)

A03	Inorganic microfiber 3 µm	**M25**	Wire mesh 25 µm
A06	Inorganic microfiber 6 µm	**M60**	Wire mesh 60 µm
A10	Inorganic microfiber 10 µm	**M90**	Wire mesh 90 µm
A16	Inorganic microfiber 16 µm	**P10**	Resin impregnated paper 10 µm
A25	Inorganic microfiber 25 µm	**P25**	Resin impregnated paper 25 µm

Element Δp	Filter media Axx	Mxx	Pxx
N 10 bar		•	•
H 10 bar	•		
W 10 bar, compatible with fluids HFA, HFB and HFC	•	•	

Seals

B	NBR
V	FPM

Bypass valve

E	3 bar
	1.75 bar

Execution

P01	MP Filtri standard
Pxx	Customized

ACCESSORIES

Indicators		page
BVA	Axial pressure gauge	240
BVR	Radial pressure gauge	240
BVP	Visual pressure indicator with automatic reset	241
BVQ	Visual pressure indicator with manual reset	241

		page
BEA	Electrical pressure indicator	239
BEM	Electrical pressure indicator	239
BLA	Electrical / visual pressure indicator	239-240

Additional features		page
TE	Extension tube	248
T5	Filler plug M30x1.5	249

Dimensions

MPFX182

Filter length	H1 [mm]	H2 [mm]
1	235	255
2	448	475

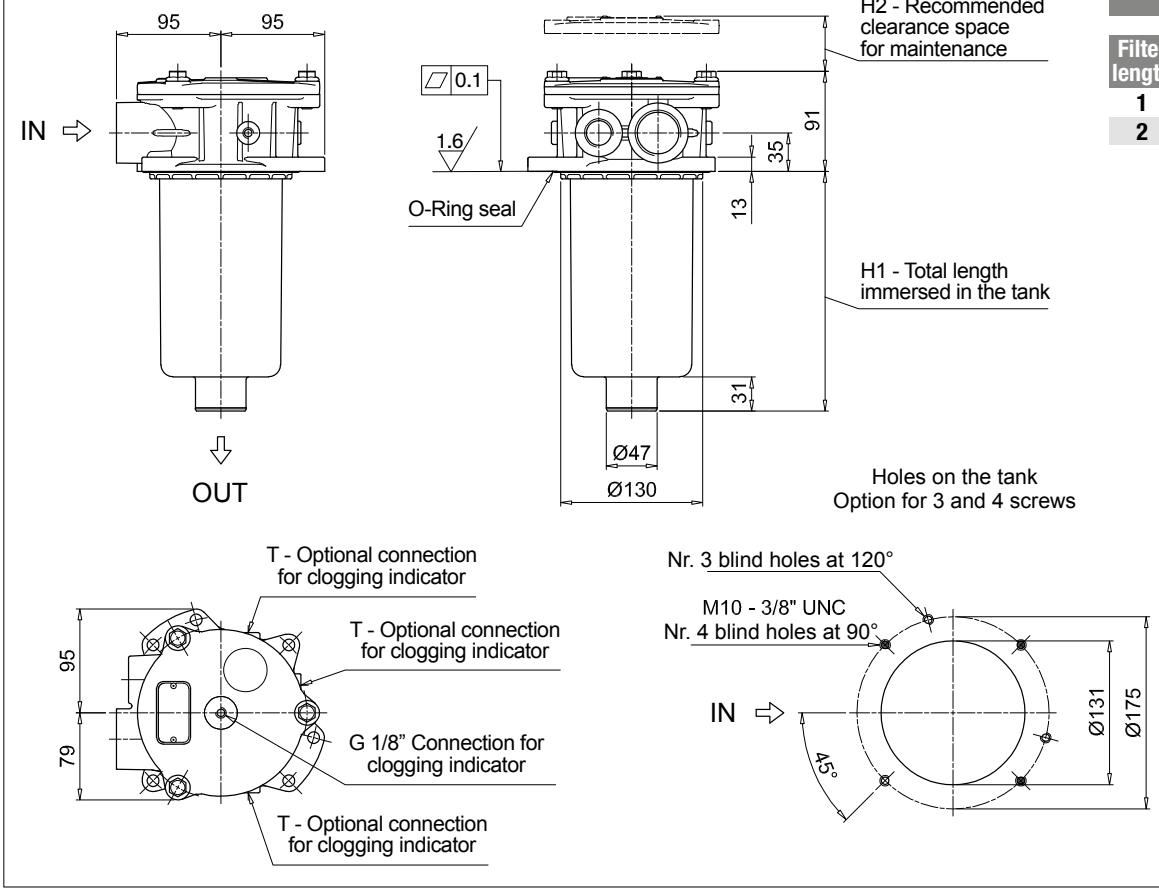

MPFX192

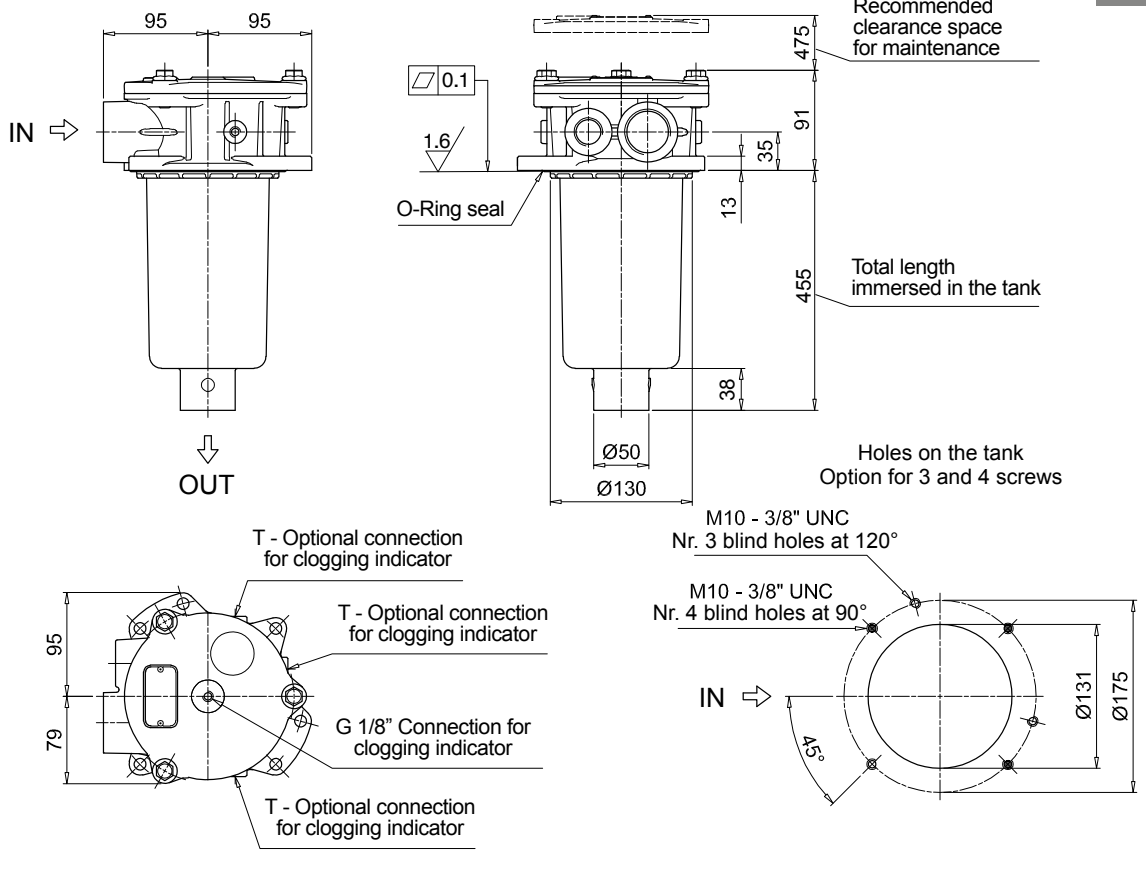

MPFX MPFX184 - MPFX194

Designation & Ordering code

COMPLETE FILTER

Configuration example 1: MPFX184 | 1 | A | G1 | A25 | H | E | P01
Configuration example 2: MPFX194 | 2 | V | F3 | P10 | N | B | P01

Series and size
MPFX184 | **MPFX194** Filter element with private spigot

Length	Size 184	Size 194
1	•	
2	•	•

Seals and treatments

A	NBR	**W**	NBR head anodized
V	FPM	**Z**	FPM head anodized

Main Connections	Rear connections
G1 G 1 1/4"	-
G2 G 1 1/4"	G 1 1/4"
G4 1 1/4" NPT	-
G5 1 1/4" NPT	1 1/4" NPT
G7 SAE 20 - 1 5/8" - 12 UN	-
G8 SAE 20 - 1 5/8" - 12 UN	SAE 20 - 1 5/8" - 12 UN
G10 SAE 24 - 1 7/8" - 12 UN	-
G11 SAE 24 - 1 7/8" - 12 UN	SAE 20 - 1 5/8" - 12 UN

Main Connections	Rear connections
G13 G 1 1/2"	-
G14 G 1 1/2"	G 1 1/4"
G15 1 1/2" NPT	-
G16 1 1/2" NPT	1 1/4" NPT
F1 1 1/2" SAE 3000 psi/M	-
F2 1 1/2" SAE 3000 psi/UNC	-
F3 1 1/2" SAE 3000 psi/M	1 1/2" SAE 3000 psi/M
F4 1 1/2" SAE 3000 psi/UNC	1 1/2" SAE 3000 psi/UNC

Filtration rating (filter media)

A03	Inorganic microfiber 3 µm	**M25**	Wire mesh 25 µm
A06	Inorganic microfiber 6 µm	**M60**	Wire mesh 60 µm
A10	Inorganic microfiber 10 µm	**M90**	Wire mesh 90 µm
A16	Inorganic microfiber 16 µm	**P10**	Resin impregnated paper 10 µm
A25	Inorganic microfiber 25 µm	**P25**	Resin impregnated paper 25 µm

Element Δp		Filter media Axx	Mxx	Pxx
N	10 bar		•	•
H	10 bar	•		
W	10 bar, compatible with fluids HFA, HFB and HFC	•	•	

Bypass valve	
E	3 bar
B	1.75 bar

Execution	
P01	MP Filtri standard
Pxx	Customized

FILTER ELEMENT

Configuration example 1: MFX180 | 1 | A25 | H | B | E | P01
Configuration example 2: MFX180 | 2 | P10 | N | V | | P01

Element series and size
MFX180 Filter element with private spigot

Element length

1	
2	

Filtration rating (filter media)

A03	Inorganic microfiber 3 µm	**M25**	Wire mesh 25 µm
A06	Inorganic microfiber 6 µm	**M60**	Wire mesh 60 µm
A10	Inorganic microfiber 10 µm	**M90**	Wire mesh 90 µm
A16	Inorganic microfiber 16 µm	**P10**	Resin impregnated paper 10 µm
A25	Inorganic microfiber 25 µm	**P25**	Resin impregnated paper 25 µm

Element Δp		Filter media Axx	Mxx	Pxx
N	10 bar		•	•
H	10 bar	•		
W	10 bar, compatible with fluids HFA, HFB and HFC	•	•	

Seals	
B	NBR
V	FPM

Bypass valve	
E	3 bar
	1.75 bar

Execution	
P01	MP Filtri standard
Pxx	Customized

ACCESSORIES

Indicators		page
BVA	Axial pressure gauge	240
BVR	Radial pressure gauge	240
BVP	Visual pressure indicator with automatic reset	241
BVQ	Visual pressure indicator with manual reset	241

		page
BEA	Electrical pressure indicator	239
BEM	Electrical pressure indicator	239
BLA	Electrical / visual pressure indicator	239-240

Additional features		page
TE	Extension tube	248
T5	Filler plug M30x1.5	249

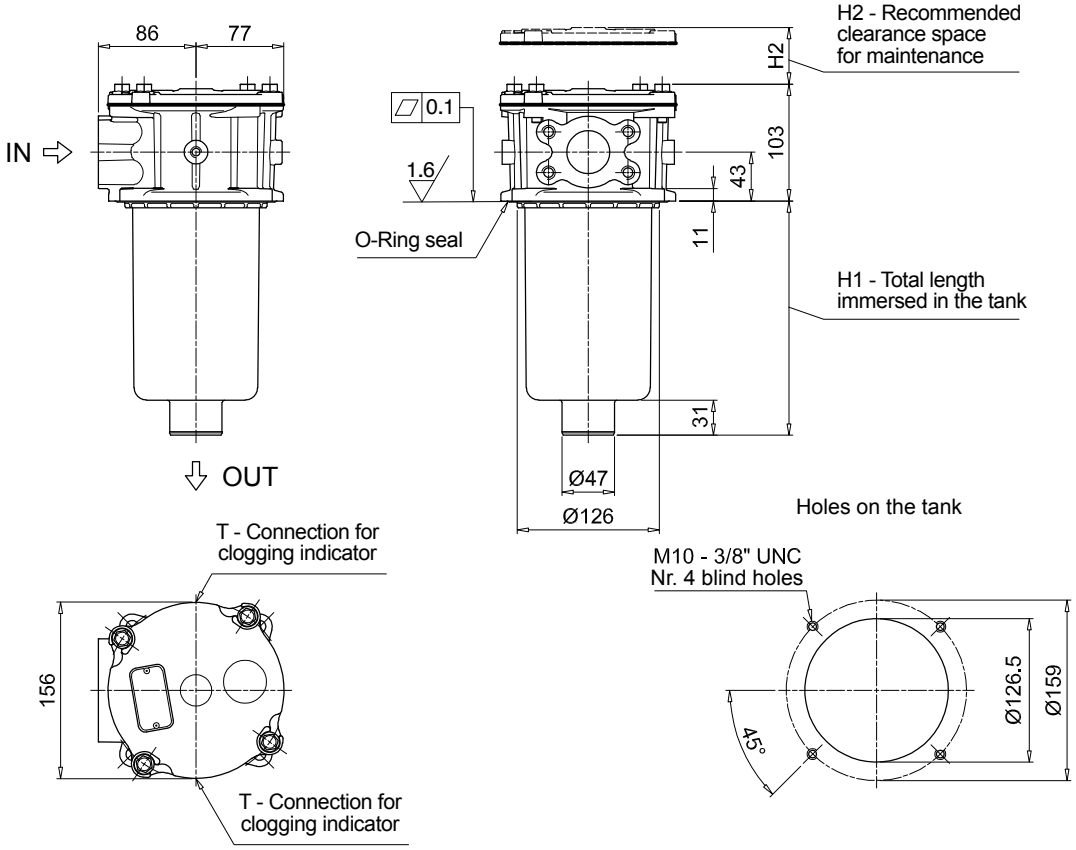

MPFX184

1 connection port

Filter length	H1 [mm]	H2 [mm]
1	232	260
2	445	480

Connection	T
G1	G 1/8"
G4 - G7 - G10	1/8" NPT
G13	G 1/8"
G15 - F1 - F2	1/8" NPT

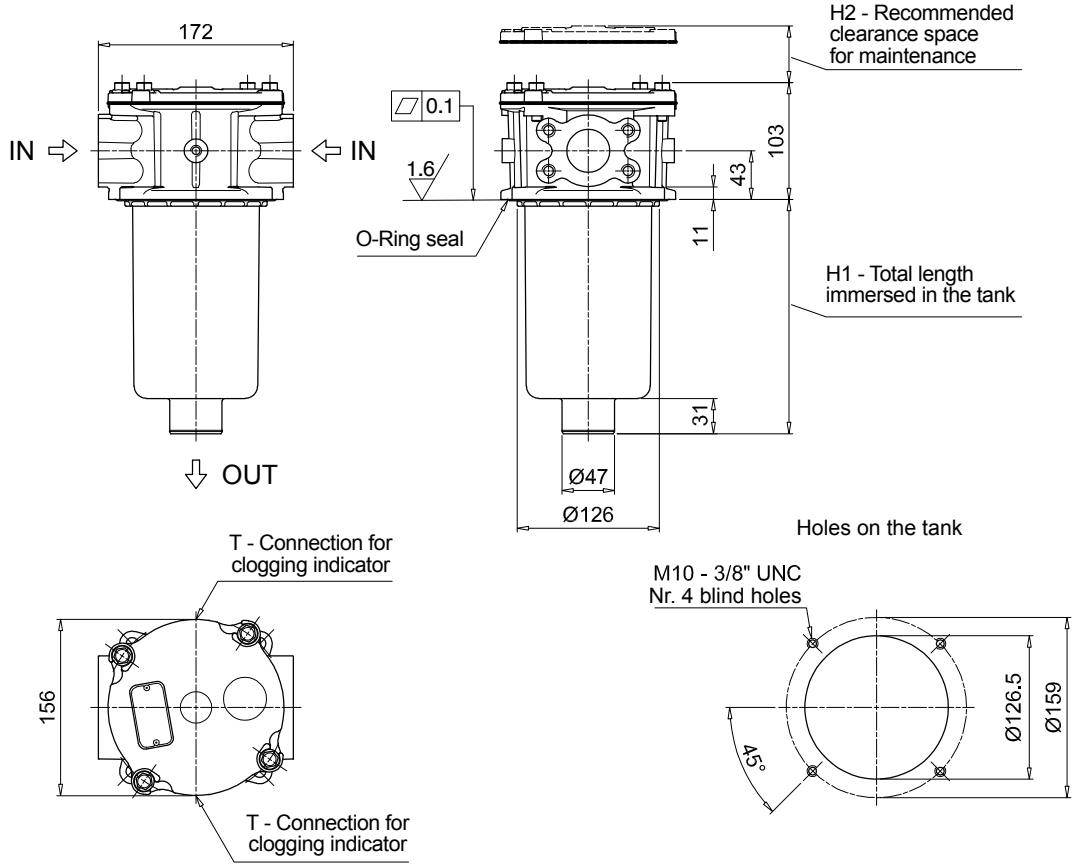

MPFX184

2 connection ports

Filter length	H1 [mm]	H2 [mm]
1	232	260
2	445	480

Connection	T
G2	G 1/8"
G5 - G8 - G11	1/8" NPT
G14	G 1/8"
G16 - F3 - F4	1/8" NPT

Dimensions

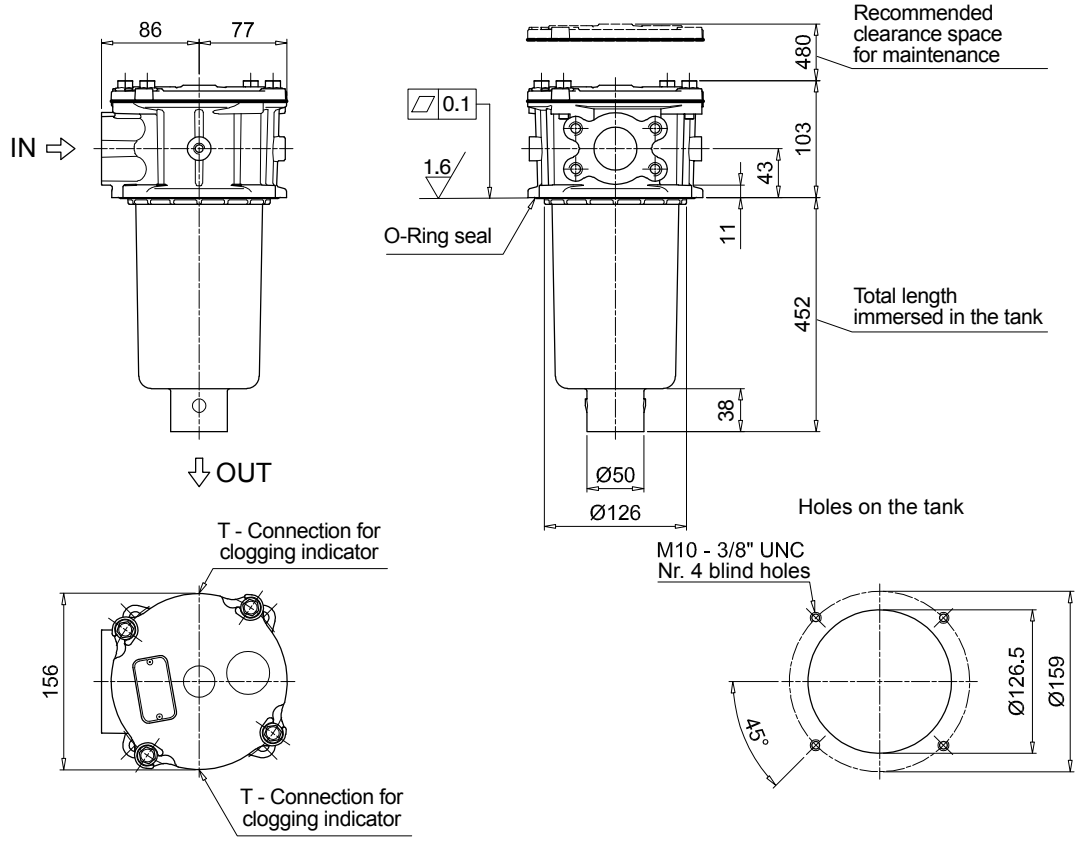

MPFX194	
1 connection port	
Connections	**T**
G1	G 1/8"
G4 - G7 - G10	1/8" NPT
G13	G 1/8"
G15 - F1 - F2	1/8" NPT

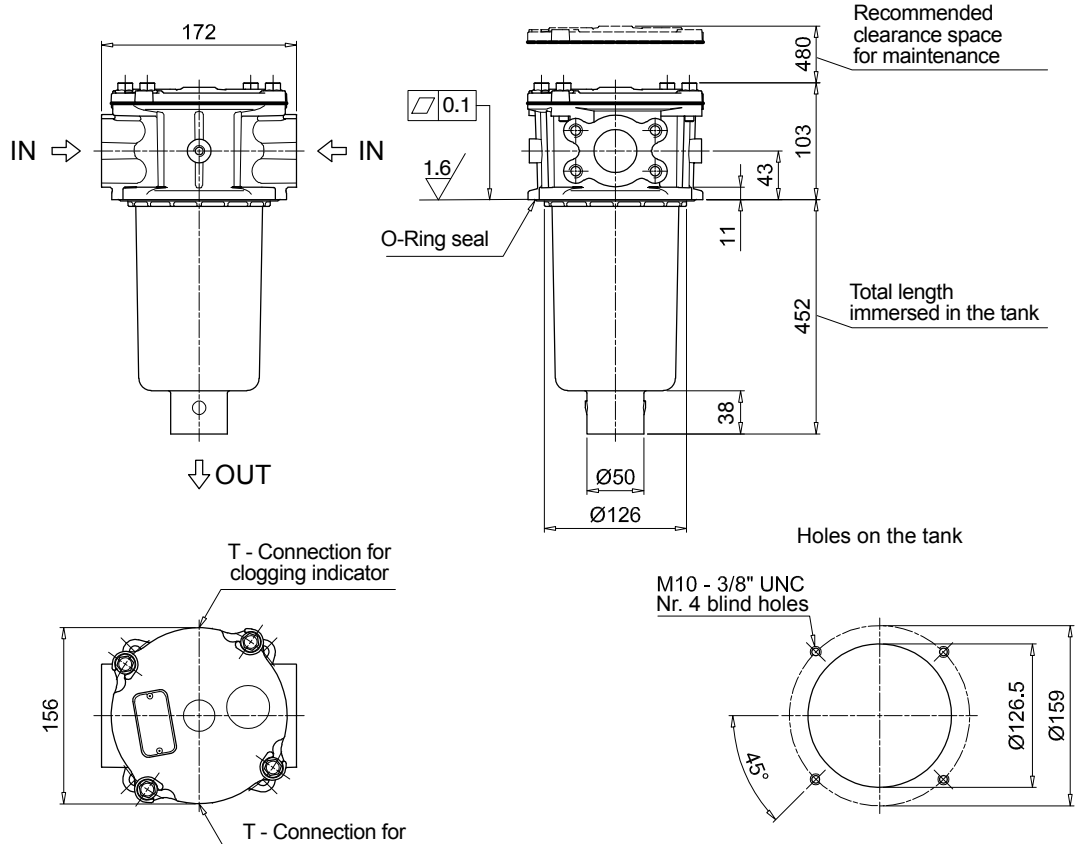

MPFX194	
2 connection ports	
Connections	**T**
G2	G 1/8"
G5 - G8 - G11	1/8" NPT
G14	G 1/8"
G16 - F3 - F4	1/8" NPT

MPFX MPFX400

Designation & Ordering code

COMPLETE FILTER

Configuration example 1:	MPFX400	1	A	G9	A25	H	B	P01
Configuration example 2:	MPFX400	2	V	G4	P10	N	E	P01

Series and size

MPFX400 Filter element with private spigot

Length

1 | **2** | **3** |

Seals and treatments

A	NBR
V	FPM
W	NBR head anodized
Z	FPM head anodized

Connections

G1	G 1 1/4”	**G6**	2” NPT
G2	G 1 1/2”	**G7**	SAE 20 - 1 5/8” - 12 UN
G3	G 2”	**G8**	SAE 24 - 1 7/8” - 12 UN
G4	1 1/4” NPT	**G9**	SAE 32 - 2 1/2” - 12 UN
G5	1 1/2” NPT		

Filtration rating (filter media)

A03	Inorganic microfiber 3 µm	**M25**	Wire mesh 25 µm
A06	Inorganic microfiber 6 µm	**M60**	Wire mesh 60 µm
A10	Inorganic microfiber 10 µm	**M90**	Wire mesh 90 µm
A16	Inorganic microfiber 16 µm	**P10**	Resin impregnated paper 10 µm
A25	Inorganic microfiber 25 µm	**P25**	Resin impregnated paper 25 µm

Element Δp		Filter media Axx	Mxx	Pxx
N	10 bar		•	•
H	10 bar	•		
W	10 bar, compatible with fluids HFA, HFB and HFC	•	•	

Bypass valve

E	3 bar
B	1.75 bar

Execution

P01	MP Filtri standard
Pxx	Customized

FILTER ELEMENT

Configuration example 1:	MFX400	1	A25	H	B		P01
Configuration example 2:	MFX400	2	P10	N	V	E	P01

Element series and size

MFX400 Filter element with private spigot

Element length

1 | **2** | **3** |

Filtration rating (filter media)

A03	Inorganic microfiber 3 µm	**M25**	Wire mesh 25 µm
A06	Inorganic microfiber 6 µm	**M60**	Wire mesh 60 µm
A10	Inorganic microfiber 10 µm	**M90**	Wire mesh 90 µm
A16	Inorganic microfiber 16 µm	**P10**	Resin impregnated paper 10 µm
A25	Inorganic microfiber 25 µm	**P25**	Resin impregnated paper 25 µm

Element Δp		Filter media Axx	Mxx	Pxx
N	10 bar		•	•
H	10 bar	•		
W	10 bar, compatible with fluids HFA, HFB and HFC	•	•	

Seals

B	NBR
V	FPM

Bypass valve

E	3 bar
	1.75 bar

Execution

P01	MP Filtri standard
Pxx	Customized

ACCESSORIES

Indicators		page
BVA	Axial pressure gauge	240
BVR	Radial pressure gauge	240
BVP	Visual pressure indicator with automatic reset	241
BVQ	Visual pressure indicator with manual reset	241

		page
BEA	Electrical pressure indicator	239
BEM	Electrical pressure indicator	239
BLA	Electrical / visual pressure indicator	239-240

Additional features		page
T5	Filler plug M30x1.5	249

Dimensions

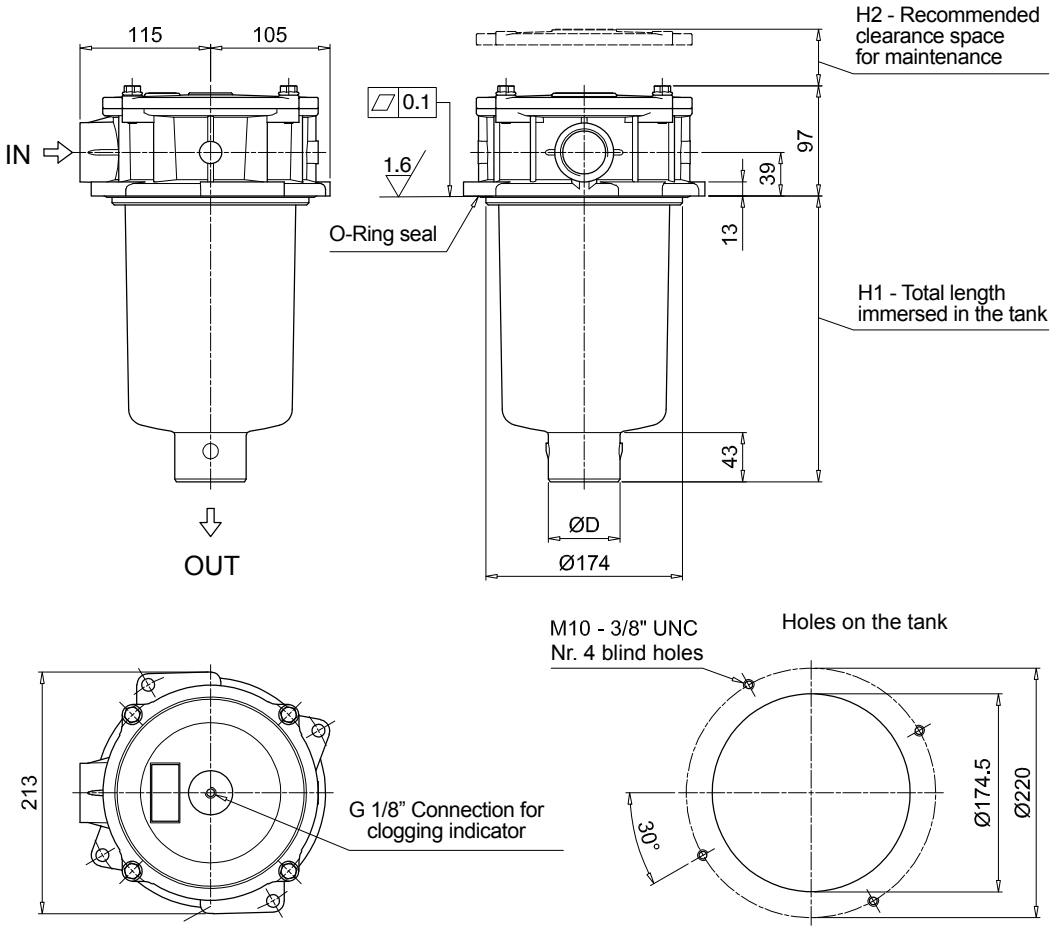

MPFX400

Filter length	H1 [mm]	H2 [mm]	D [mm]
1	187	210	50
2	252	270	63
3	300	315	63

MPFX MPFX410

Designation & Ordering code

COMPLETE FILTER

Configuration example 1:	MPFX410	1	V	G4	1	P10	N	E	P01
Configuration example 2:	MPFX410	1	A	G1	1	A25	H	B	P01

Series and size

MPFX410 Filter element with private spigot

Length

1 | **2** | **3** |

Seals and treatments

A	NBR	
V	FPM	
W	NBR	head anodized
Z	FPM	head anodized

Main Connections		Aux size 1
G1	G 1 1/4"	G 1"
G4	1 1/4" NPT	1" NPT
G7	SAE 20 - 1 5/8" - 12 UN	SAE 16 - 1 5/16"- 12 UN

Aux connection - see previous table

1 Aux size 1

Filtration rating (filter media)

A03	Inorganic microfiber 3 µm	**M25**	Wire mesh 25 µm
A06	Inorganic microfiber 6 µm	**M60**	Wire mesh 60 µm
A10	Inorganic microfiber 10 µm	**M90**	Wire mesh 90 µm
A16	Inorganic microfiber 16 µm	**P10**	Resin impregnated paper 10 µm
A25	Inorganic microfiber 25 µm	**P25**	Resin impregnated paper 25 µm

Element Δp		Filter media Axx	Mxx	Pxx
N	10 bar		•	•
H	10 bar	•		
W	10 bar, compatible with fluids HFA, HFB and HFC	•	•	

Bypass valve	
E	3 bar
B	1.75 bar

Execution	
P01	MP Filtri standard
Pxx	Customized

FILTER ELEMENT

Configuration example 1:	MFX400	1	P10	N	V	E	P01
Configuration example 2:	MFX400	1	A25	H	B		P01

Element series and size

MFX400 Filter element with private spigot

Element length

1 | **2** | **3** |

Filtration rating (filter media)

A03	Inorganic microfiber 3 µm	**M25**	Wire mesh 25 µm
A06	Inorganic microfiber 6 µm	**M60**	Wire mesh 60 µm
A10	Inorganic microfiber 10 µm	**M90**	Wire mesh 90 µm
A16	Inorganic microfiber 16 µm	**P10**	Resin impregnated paper 10 µm
A25	Inorganic microfiber 25 µm	**P25**	Resin impregnated paper 25 µm

Element Δp		Filter media Axx	Mxx	Pxx
N	10 bar		•	•
H	10 bar	•		
W	10 bar, compatible with fluids HFA, HFB and HFC	•	•	

Seals	
B	NBR
V	FPM

Bypass valve	
E	3 bar
	1.75 bar

Execution	
P01	MP Filtri standard
Pxx	Customized

ACCESSORIES

Indicators		page
BVA	Axial pressure gauge	240
BVR	Radial pressure gauge	240
BVP	Visual pressure indicator with automatic reset	241
BVQ	Visual pressure indicator with manual reset	241

		page
BEA	Electrical pressure indicator	239
BEM	Electrical pressure indicator	239
BLA	Electrical / visual pressure indicator	239-240

Additional features		page
T5	Filler plug M30x1.5	249

Dimensions

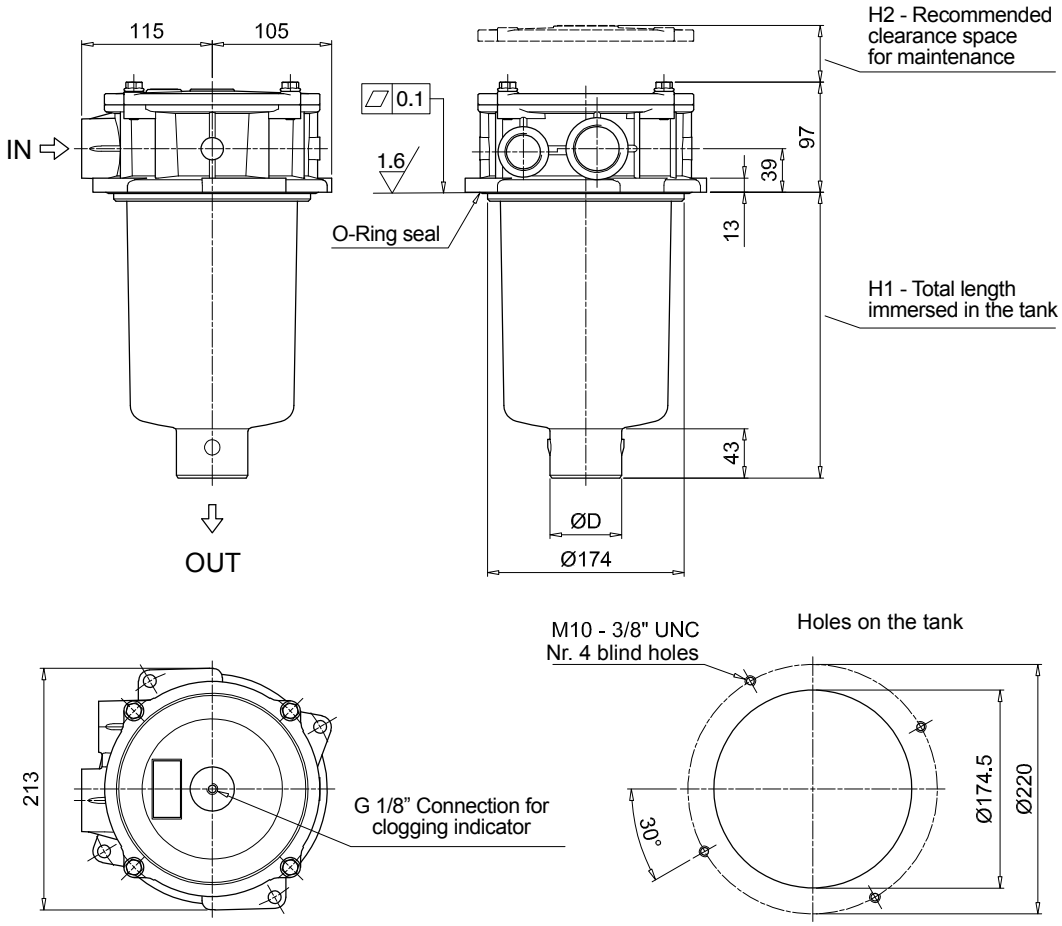

MPFX410

Filter length	H1 [mm]	H2 [mm]	D [mm]
1	187	210	50
2	252	270	63
3	300	315	63

MPFX MPFX450 - MPFX451 - MPFX750

Designation & Ordering code

COMPLETE FILTER

Configuration example 1:	MPFX450	1	A	G1	A25	H	B	P01
Configuration example 2:	MPFX750	1	V	F2	P10	N	E	P01

Series and size

MPFX450 | **MPFX451** | **MPFX750** Filter element with private spigot

Length	MPFX 450	MPFX 451	MPFX 750
1	•	•	•
2	•	•	
3	•	•	

Seals and treatments

A	NBR	**W**	NBR head anodized
V	FPM	**Z**	FPM head anodized

Connections	Aux (only size 451)
G1 G 2”	G 3/4”
G4 2” NPT	3/4” NPT
G7 SAE 32 - 2 1/2” - 12 UN	SAE 12 - 1 1/16” - 12 UN
F1 2” SAE 3000 psi/M	G 3/4”
F2 2” SAE 3000 psi/UN	3/4” NPT

Filtration rating (filter media)

A03	Inorganic microfiber 3 µm	**M25**	Wire mesh 25 µm
A06	Inorganic microfiber 6 µm	**M60**	Wire mesh 60 µm
A10	Inorganic microfiber 10 µm	**M90**	Wire mesh 90 µm
A16	Inorganic microfiber 16 µm	**P10**	Resin impregnated paper 10 µm
A25	Inorganic microfiber 25 µm	**P25**	Resin impregnated paper 25 µm

		Filter media		
Element Δp		Axx	Mxx	Pxx
N	10 bar		•	•
H	10 bar	•		
W	10 bar, compatible with fluids HFA, HFB and HFC	•	•	

Bypass valve	
E	3 bar
B	1.75 bar

Execution	
P01	MP Filtri standard
Pxx	Customized

FILTER ELEMENT

Configuration example 1:	MFX400	1	A25	H	B		P01
Configuration example 2:	MFX750	1	P10	N	V	E	P01

Element series and size

MFX400 | **MFX750** Filter element with private spigot

Element length	MPFX 450	MPFX 451	MPFX 750
1	•	•	•
2	•	•	
3	•	•	

Filtration rating (filter media)

A03	Inorganic microfiber 3 µm	**M25**	Wire mesh 25 µm
A06	Inorganic microfiber 6 µm	**M60**	Wire mesh 60 µm
A10	Inorganic microfiber 10 µm	**M90**	Wire mesh 90 µm
A16	Inorganic microfiber 16 µm	**P10**	Resin impregnated paper 10 µm
A25	Inorganic microfiber 25 µm	**P25**	Resin impregnated paper 25 µm

		Filter media		
Element Δp		Axx	Mxx	Pxx
N	10 bar		•	•
H	10 bar	•		
W	10 bar, compatible with fluids HFA, HFB and HFC	•	•	

Seals	
B	NBR
V	FPM

Bypass valve	
E	3 bar
	1.75 bar

Execution	
P01	MP Filtri standard
Pxx	Customized

ACCESSORIES

Indicators		page
BVA	Axial pressure gauge	240
BVR	Radial pressure gauge	240
BVP	Visual pressure indicator with automatic reset	241
BVQ	Visual pressure indicator with manual reset	241
BEA	Electrical pressure indicator	239
BEM	Electrical pressure indicator	239
BLA	Electrical / visual pressure indicator	239-240

Additional features		page
T5	Filler plug M30x1.5	249

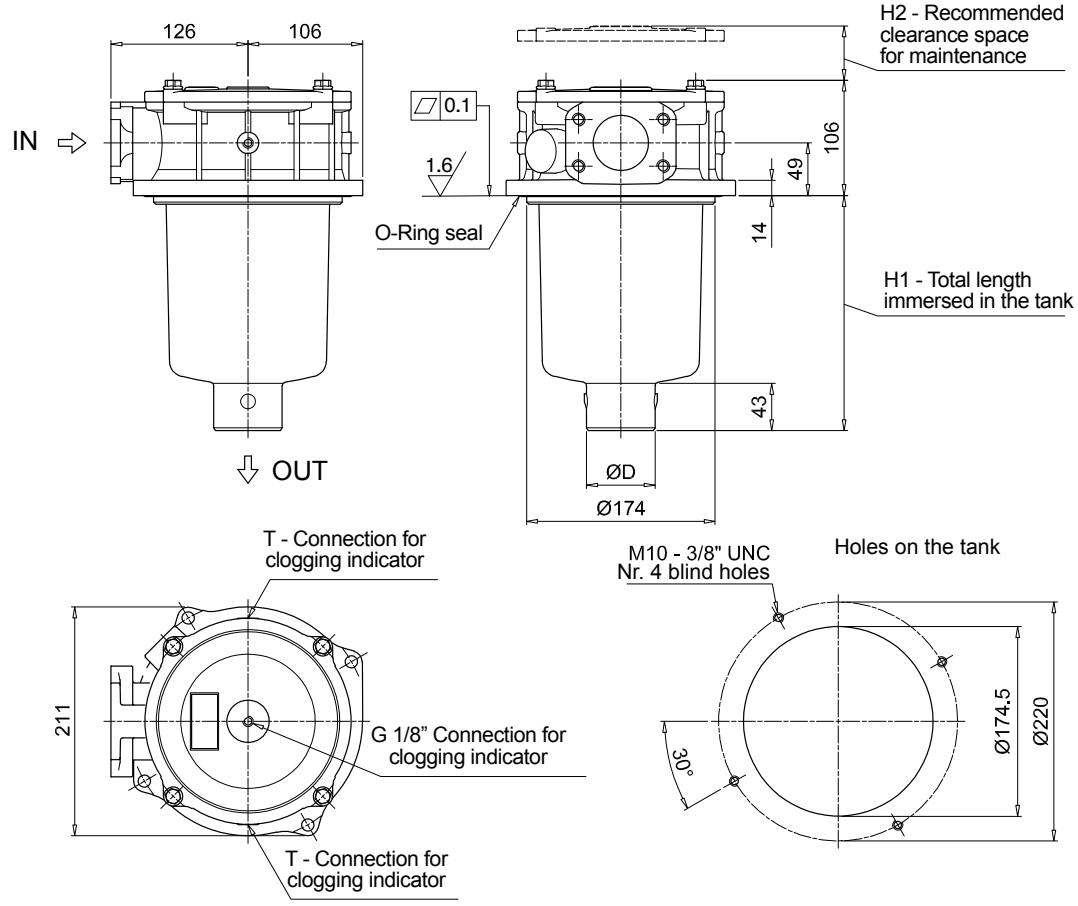

MPFX450

Filter length	H1 [mm]	H2 [mm]	D [mm]
1	187	210	50
2	252	270	63
3	300	315	63

Connections	T
G1	G 1/8"
G4 - G7	1/8" NPT
F1	G 1/8"
F2	1/8" NPT

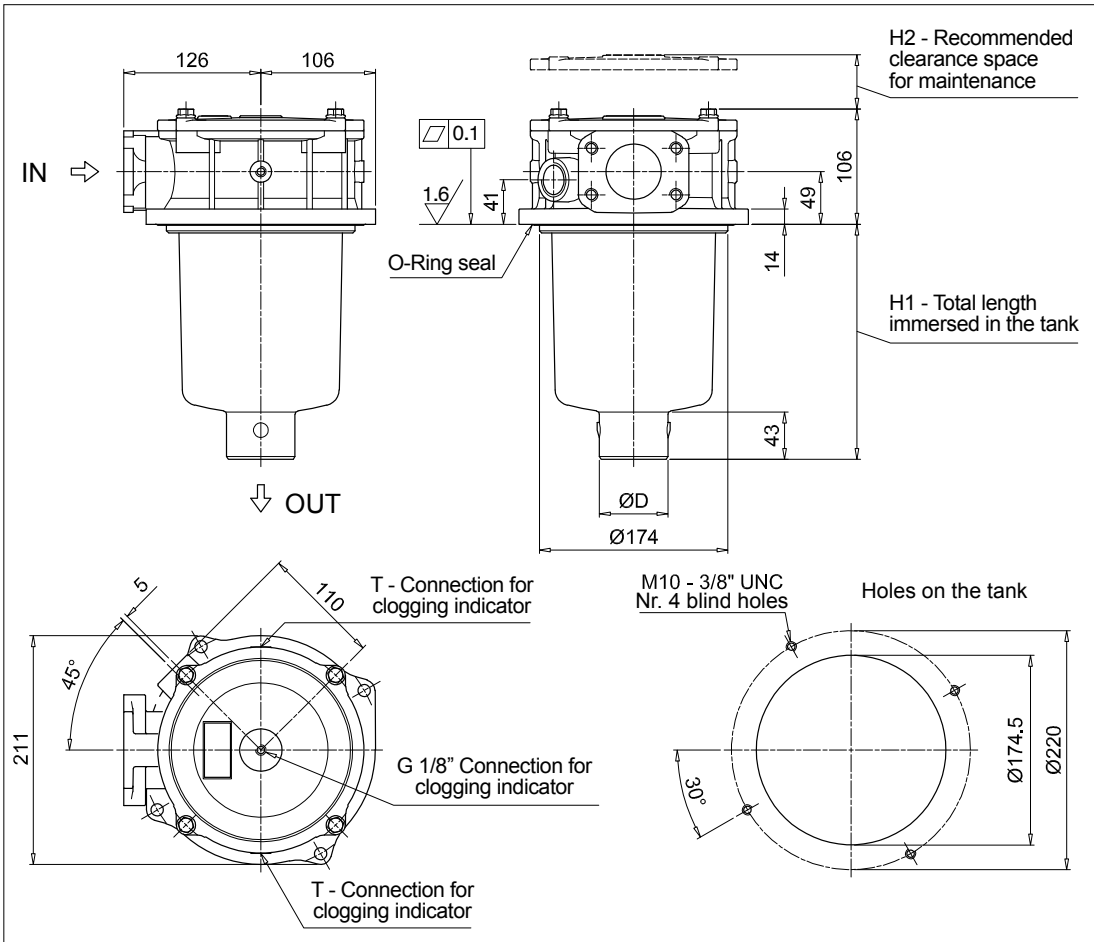

MPFX451

Filter length	H1 [mm]	H2 [mm]	D [mm]
1	187	210	50
2	252	270	63
3	300	315	63

Connections	T
G1	G 1/8"
G4 - G7	1/8" NPT
F1	G 1/8"
F2	1/8" NPT

Dimensions

MPFX750

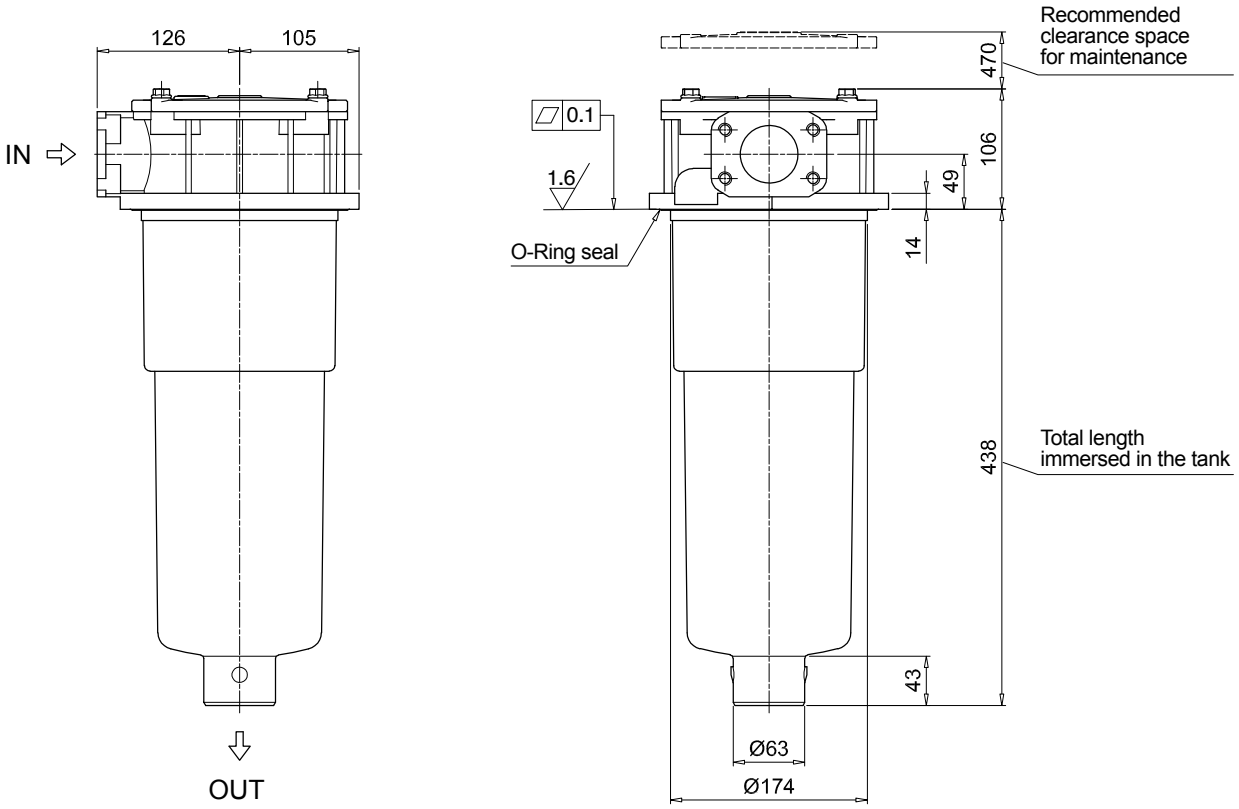

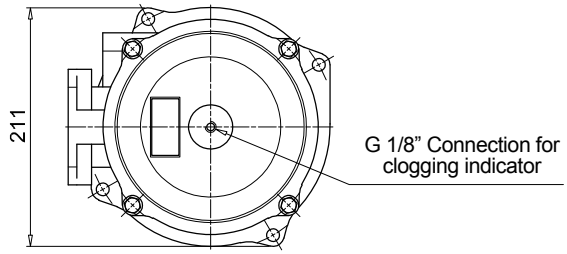

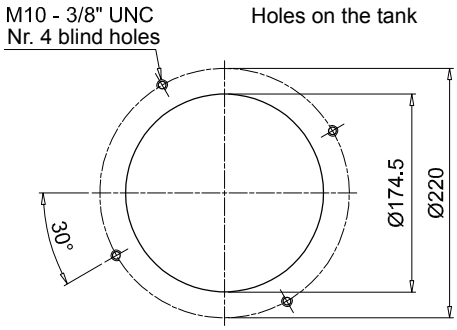

Order number for spare parts

MPFX 100

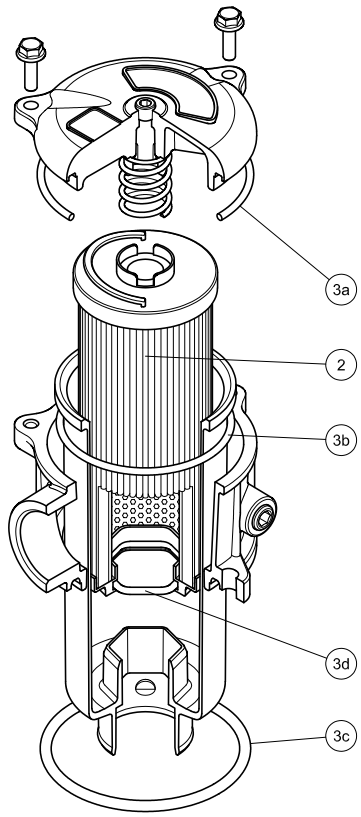

MPFX 181

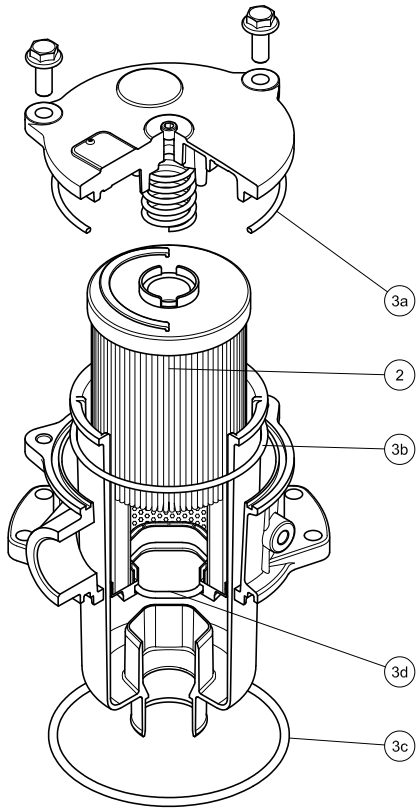

O-RING SEAL

Item:	Q.ty: 1 pc. 2	Q.ty: 1 pc. 3 (3a ÷ 3d)	
Filter series	Filter element	Seal Kit code number NBR	FPM
MPFX 030	See order table	02050675	02050676
MPFX 100-110		02050677	02050678
MPFX 181-182		02050681	02050682
MPFX 184		02050685	02050686
MPFX 191-192		02050683	02050684
MPFX 194		02050687	02050688
MPFX 400-410		02050695	02050696
MPFX 450-451		02050697	02050698
MPFX 750		02050699	02050700

MPFX 104

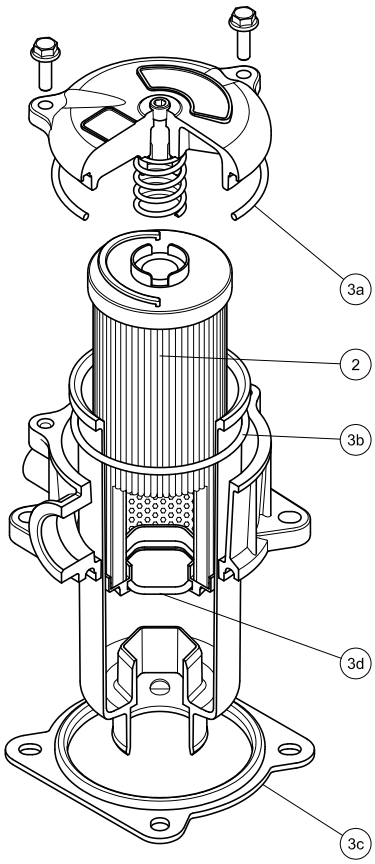

MPFX 181

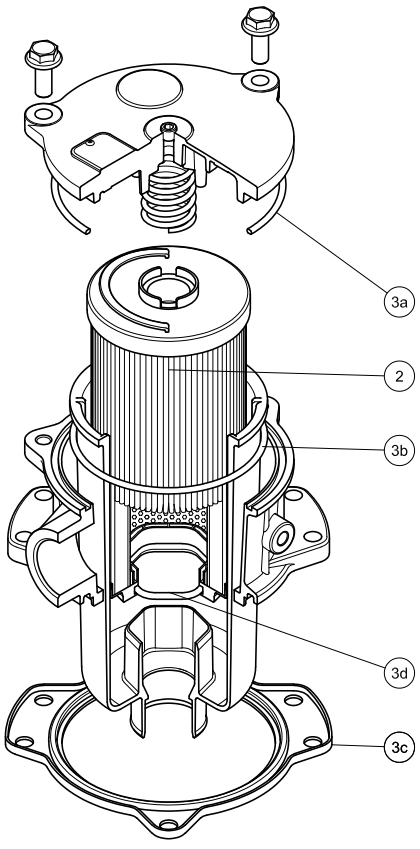

FLAT SEAL

Item:	Q.ty: 1 pc. 2	Q.ty: 1 pc. 3 (3a ÷ 3d)	
Filter series	Filter element	Seal Kit code number NBR	FPM
MPFX 104	See order table	02050679	02050680
MPFX 181-182		02050691	02050692
MPFX 191-192		02050691	02050692

MPLX series

Maximum working pressure up to 1 MPa (10 bar) - Flow rate up to 1800 l/min



MPLX GENERAL INFORMATION

Description

Return filter

Maximum working pressure up to 1 MPa (10 bar)
Flow rate up to 1800 l/min

MPLX is a range of return filters for protection of the reservoir against the system contamination.
Completely interchangeable with Pall 8420 & 8520, they are directly fixed to the reservoir, in immersed or semi-immersed position.
The use of the diffuser is recommended, to place the filter output always immersed into the fluid to avoid aeration or foam generation into the reservoir.
The filter output must be always immersed into the fluid to avoid aeration or foam generation into the reservoir.

Available features:
- Flanged connections up to 3", for a maximum flow rate of 1800 l/min
- Fine filtration rating, to get a good cleanliness level into the reservoir
- Bypass valve, to relieve excessive pressure drop across the filter media
- 6 fixing holes for installation, to suit a variety of reservoir surfaces
- Diffuser, to reduce the risk of aeration, foaming and noise
- Filler plug, to fill cleaned fluid into the tank without an additional connection
- Visual, electrical and electronic differential clogging indicators

Common applications:
- Heavy duty industrial equipment
- Heavy duty mobile equipment

Technical data

Filter housing materials
- Head: Anodized aluminium
- Cover: Anodized aluminium
- Bowl: Phosphatized steel
- Bypass valve: Steel

Bypass valve
- Opening pressure 450 kPa (4.5 bar) ±10%

Δp element type
- Microfiber filter elements: 10 bar
- Fluid flow through the filter element from OUT to IN.

Seals
- Standard NBR series A
- Optional FPM series V

Temperature
From -25 °C to +110 °C

Note
MPLX filters are provided for vertical mounting



Weights [kg] and volumes [dm³]

Filter series	Weights [kg]		Volumes [dm³]	
	Length	2	Length	2
MPLX 250		8.95		2.90
MPLX 660		20.20		11.00

FILTER ASSEMBLY SIZING
Flow rates [l/min]

Filter series	Length	Filter element design - N Series						
		A03	A06	A10	A16	A25	M25 M60 M90	P10 P25
MPLX 250	**2**	157	155	281	312	325	583	392
MPLX 660	**2**	376	384	820	925	1018	1732	1332

Maximum flow rate for a complete return filter with a pressure drop Δp = 0.5 bar.

The reference fluid has a kinematic viscosity of 30 mm^2/s (cSt) and a density of 0.86 kg/dm^3.

For different pressure drop or fluid viscosity we recommend to use our selection software available on www.mpfiltri.com.

You can also calculate the right size using the formulas present on the FILTER SIZING paragraph at the beginning of the full catalogue or at the beginning of the filter family brochure.

Please, contact our Sales Department for further additional information.

Hydraulic symbols

Filter series	Style 1 connection + Diff. indic.
MPLX 250	•
MPLX 660	•

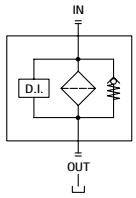

Pressure drop

Filter housings
Δp pressure drop

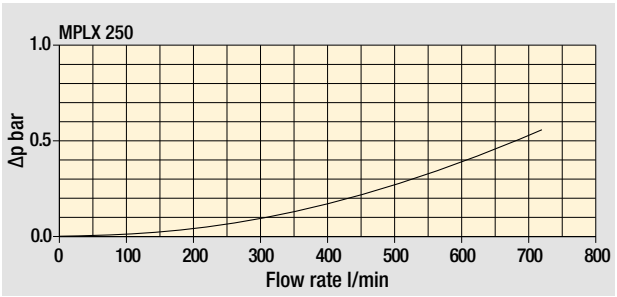

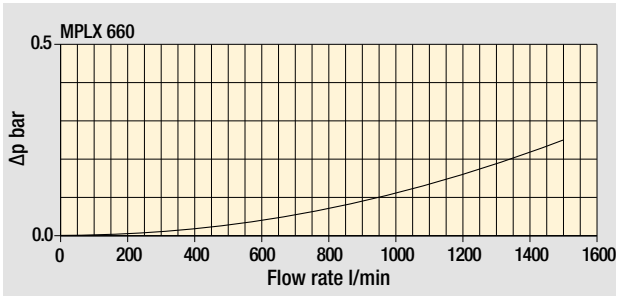

Bypass valve
pressure drop

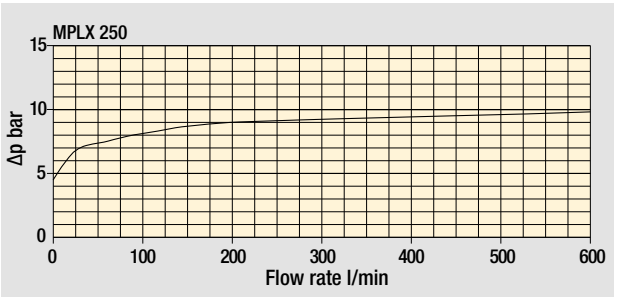

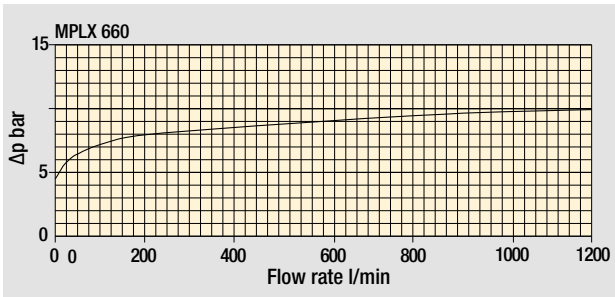

The curves are plotted using mineral oil with density of 0.86 kg/dm^3 in compliance with ISO 3968. Δp varies proportionally with density.

MPLX MPLX250 - MPLX660

Designation & Ordering code

COMPLETE FILTER

Configuration example 1:	MPLX250	2	D	S	W	A	6	M25	P01
Configuration example 2:	MPLX660	2	D	D	A	B	6	A10	P01

Series and size

MPLX250 Filter element with private spigot
MPLX660 Filter element with private spigot

Length

2

By-pass valve

D 4.5 bar

Diffuser

S Without diffuser
D With standard diffuser

Seals and treatments		Filtration rating Axx	Mxx	Pxx
A	NBR	•	•	•
V	FPM	•	•	•
W	NBR filter element compatible with fluids HFA-HFB-HFC	•	•	
Z	FPM	•	•	

Connections	MPLX250	MPLX660
A	2” SAE 3000 psi/M	3” SAE 3000 psi/M
B	2” SAE 3000 psi/UNC	3” SAE 3000 psi/UNC

Connection for differential indicator

6 With plugged connection

Filtration rating (filter media)

A03	Inorganic microfiber 3 µm	**M25**	Wire mesh 25 µm
A06	Inorganic microfiber 6 µm	**M60**	Wire mesh 60 µm
A10	Inorganic microfiber 10 µm	**M90**	Wire mesh 90 µm
A16	Inorganic microfiber 16 µm	**P10**	Resin impregnated paper 10 µm
A25	Inorganic microfiber 25 µm	**P25**	Resin impregnated paper 25 µm

Execution

P01 MP Filtri standard
Pxx Customized

FILTER ELEMENT

Configuration example 1:	MLX250	2	M25	W	P01
Configuration example 2:	MLX660	2	A10	A	P01

Element series and size

MLX250 Filter element with private spigot
MLX660 Filter element with private spigot

Element length

2

Filtration rating (filter media)

A03	Inorganic microfiber 3 µm	**M25**	Wire mesh 25 µm
A06	Inorganic microfiber 6 µm	**M60**	Wire mesh 60 µm
A10	Inorganic microfiber 10 µm	**M90**	Wire mesh 90 µm
A16	Inorganic microfiber 16 µm	**P10**	Resin impregnated paper 10 µm
A25	Inorganic microfiber 25 µm	**P25**	Resin impregnated paper 25 µm

Seals and treatments		Filtration rating Axx	Mxx	Pxx
A	NBR	•	•	•
V	FPM	•	•	•
W	NBR filter element compatible with fluids HFA-HFB-HFC	•	•	
Z	FPM	•	•	

Execution

P01 MP Filtri standard
Pxx Customized

ACCESSORIES

Indicators

DEA	Electrical differential indicator	242
DEM	Electrical differential indicator	242-243
DLA	Electrical / visual differential indicator	243-244
DLE	Electrical / visual differential indicator	244
DTA	Electronic differential indicator	245
DVA	Visual differential indicator	245
DVM	Visual differential indicator	245

Additional features

T2	Plug	246

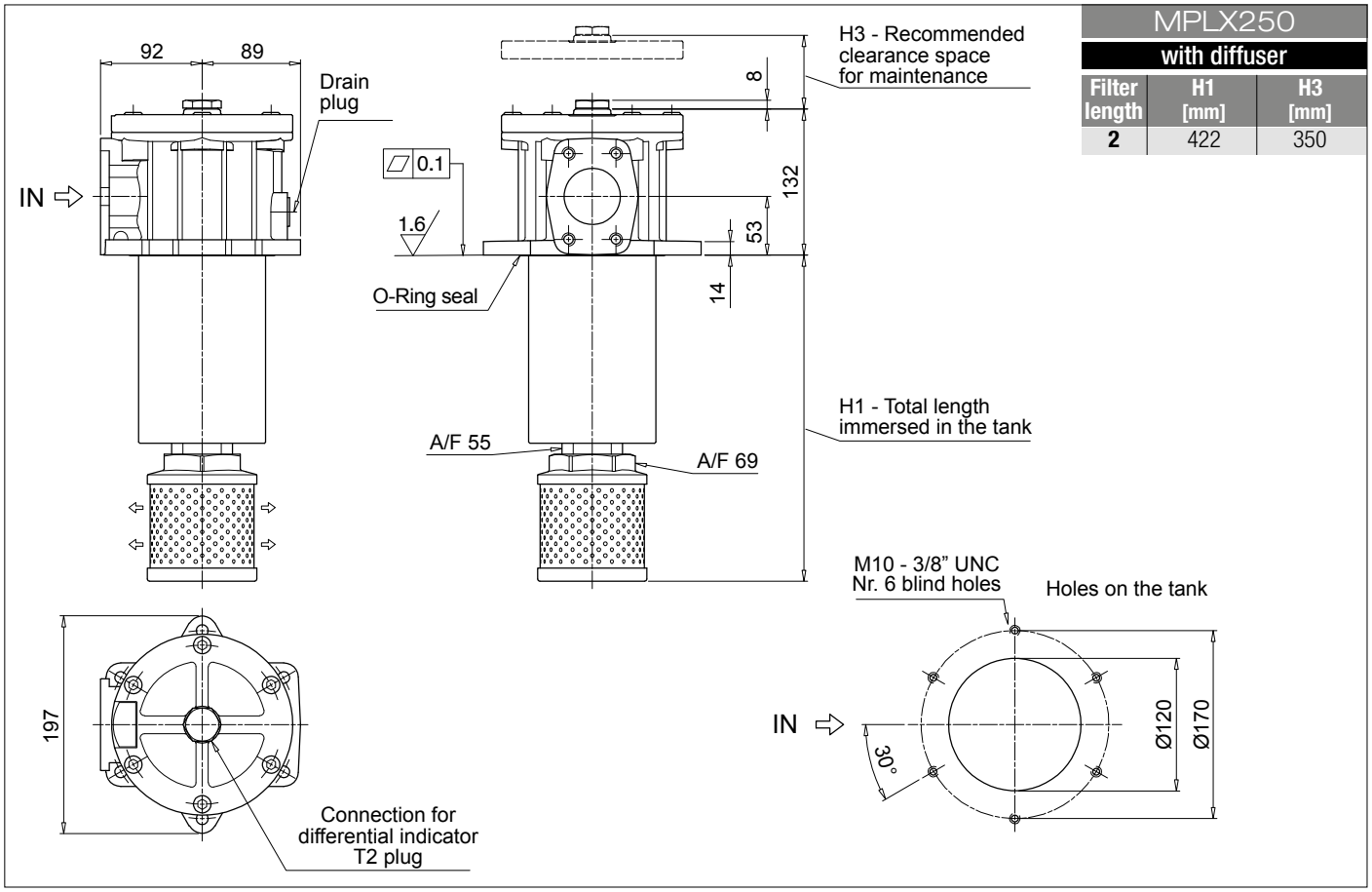

MPLX250 with diffuser		
Filter length	H1 [mm]	H3 [mm]
2	422	350

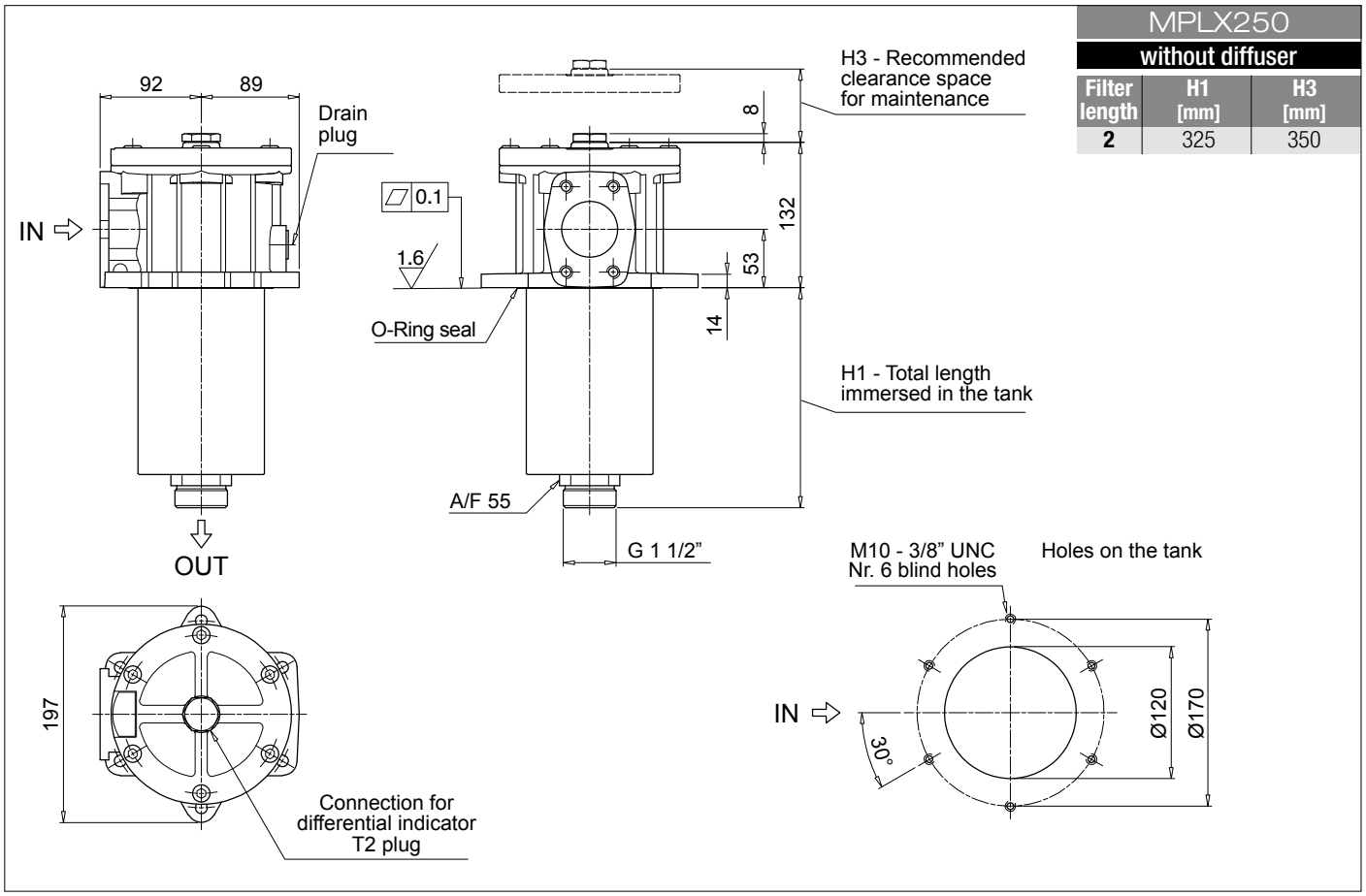

MPLX250 without diffuser		
Filter length	H1 [mm]	H3 [mm]
2	325	350

Dimensions

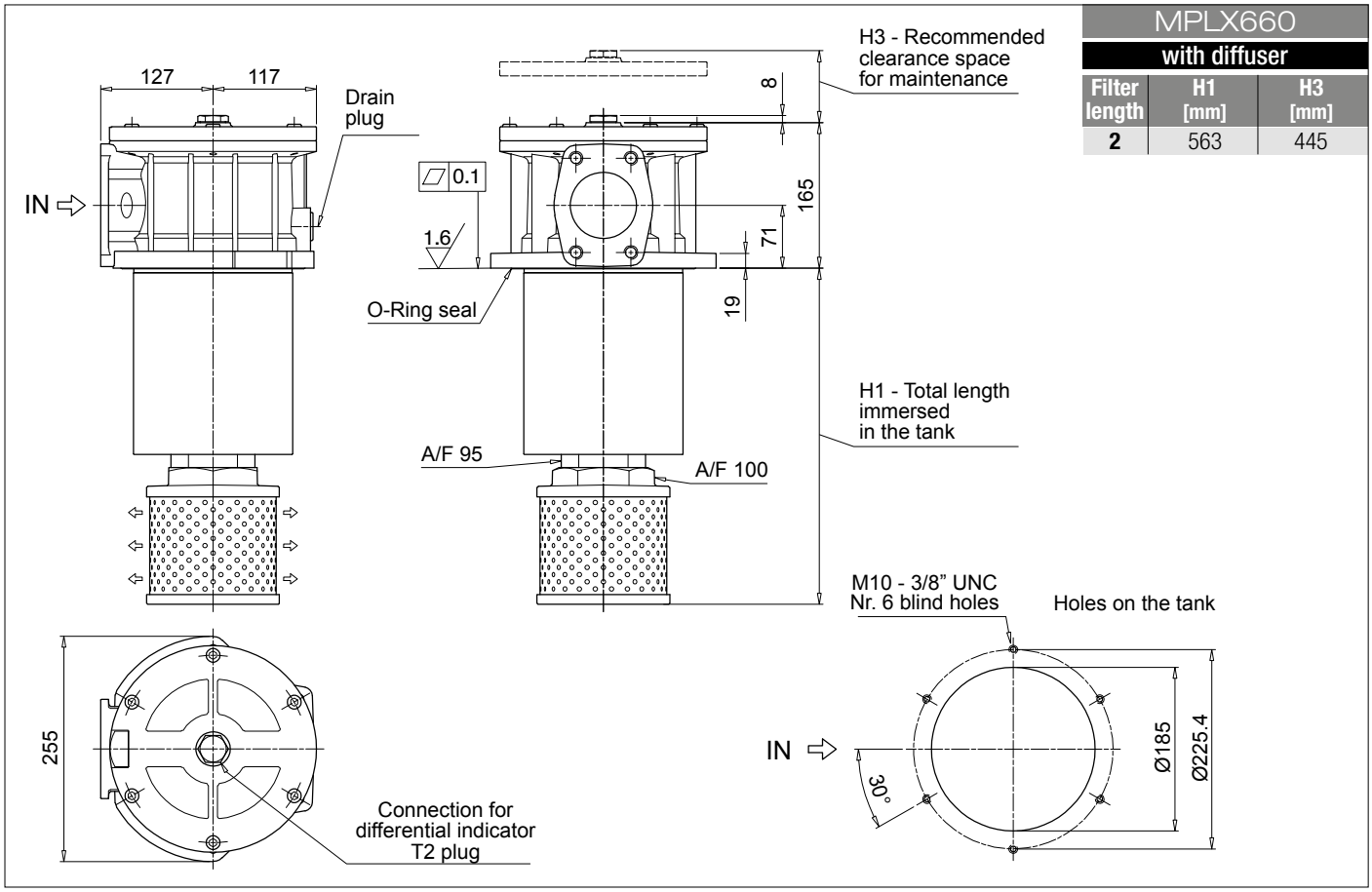

MPLX660 with diffuser		
Filter length	H1 [mm]	H3 [mm]
2	563	445

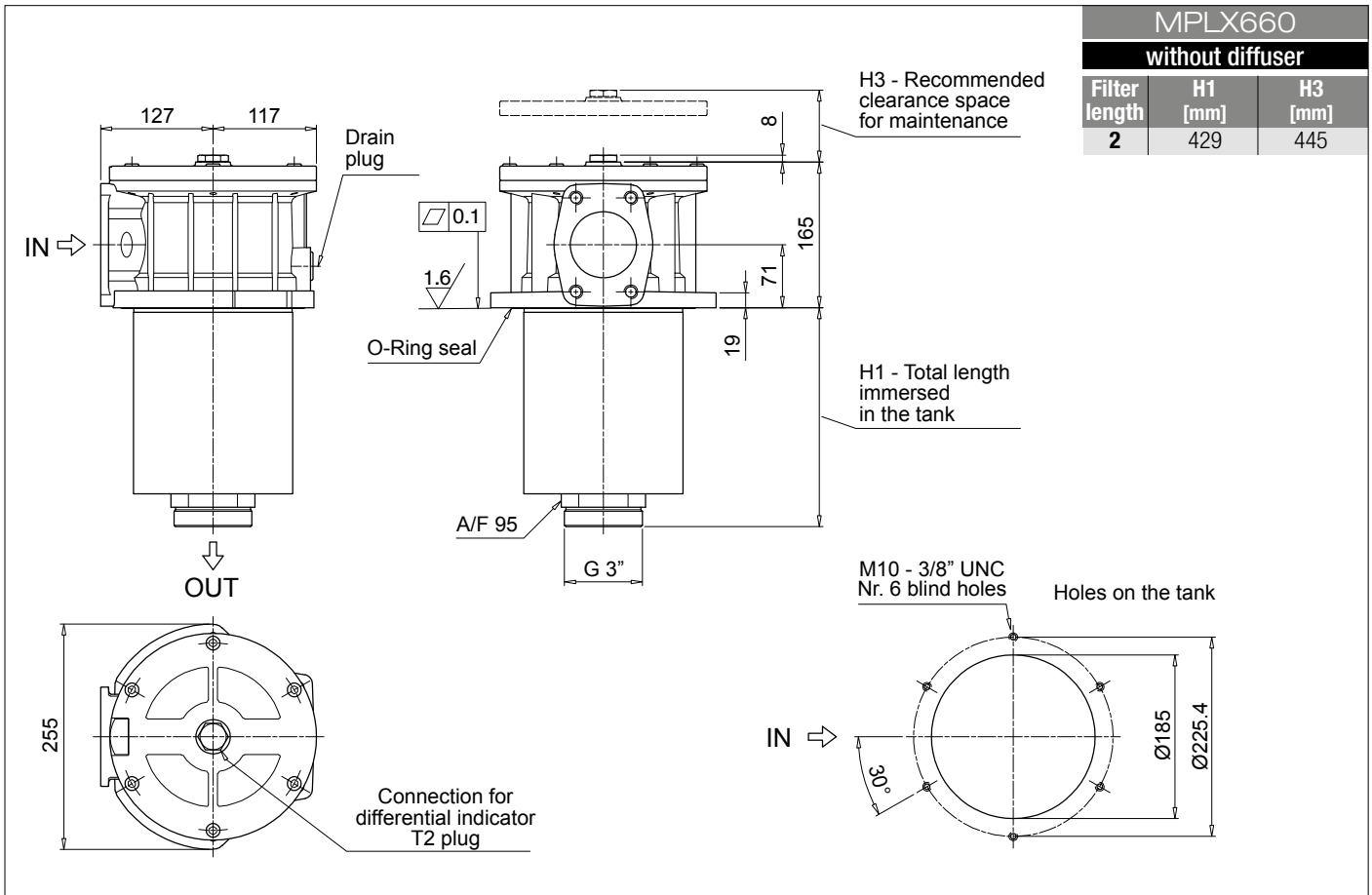

MPLX660 without diffuser		
Filter length	H1 [mm]	H3 [mm]
2	429	445

Order number for spare parts

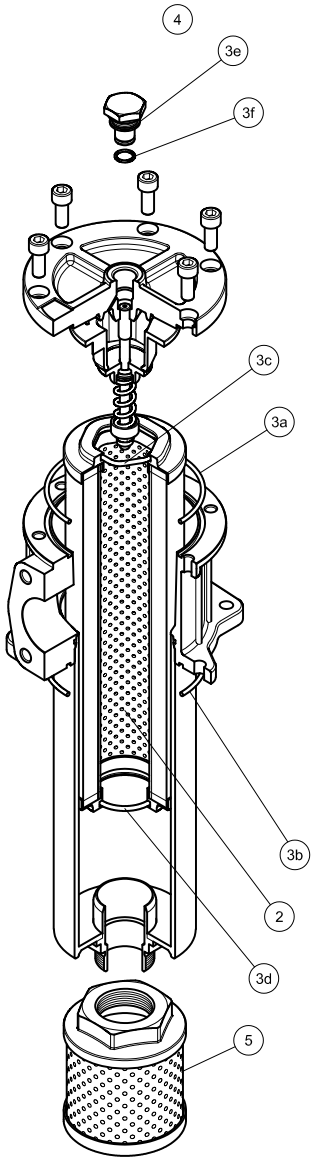

Item:	Q.ty: 1 pc. 2	Q.ty: 1 pc. 3 (3a ÷ 3f)		Q.ty: 1 pc. 4		Q.ty: 1 pc. 5
Filter series	Filter element	Seal Kit code number NBR	Seal Kit code number FPM	Indicator connection plug NBR	Indicator connection plug FPM	Diffuser
MPLX 250	See order table	02050745	02050746	T2H	T2V	STD 100 C 115 P01
MPLX 660		02050747	02050748			STD 150 E 155 P01

MPTX series

Maximum working pressure up to 800 kPa (8 bar) - Flow rate up to 300 l/min



MPTX GENERAL INFORMATION

Description

Return filter

Maximum working pressure up to 800 kPa (8 bar)
Flow rate up to 300 l/min

MPTX is a range of return filters with integrated breather filter, for protection of the reservoir against the system contamination.
They are directly fixed to the reservoir, in immersed or semi-immersed position.
The filter output must be always immersed into the fluid to avoid aeration or foam generation into the reservoir.

Available features:
- Female threaded connections up to 1 1/4", for a maximum flow rate of 300 l/min
- Multiple connections, to connect several return lines or drains
- Fine filtration rating, to get a good cleanliness level into the reservoir
- Bypass valve integrated into the filter element, to relieve excessive pressure drop across the filter media
- 2, 3 or 6 fixing holes for installation, to suit a variety of reservoir surfaces
- O-ring or Flat Seal to suit a variety of reservoir surfaces
- Screw-in cover with a special shape, to allow the filter element replacement without the use of specific tools
- Oil dipstick, to easily check the level of the fluid into the reservoir (sold as separate item)
- Extension tube, to be used in deep reservoirs (sold as separate item)
- Diffuser, to reduce the risk of aeration, foaming and noise (sold as separate item)
- Integrated breather filter, to clean the air that moves into the reservoir as result of the oil level fluctuation
- Integrated breather filter with pressurization valve, to clean the air that moves into the reservoir as result of the oil level fluctuation and to guarantee the pressurization into the reservoir
- Visual, electrical and electronic clogging indicators
- MYclean interface connection, to protect the product against non-original spare parts
- External protective wrap, to optimize the flow through the element and to save the element efficiency against non-proper handling

Common applications:
- Light industrial equipment
- Mobile application

Technical data

Filter housing materials
- Head: Aluminium
- Cover: Nylon
- Bowl: Nylon

Bypass valve
- Opening pressure 175 kPa (1.75 bar) ±10%
- Opening pressure 300 kPa (3 bar) ±10%

Δp element type
- Microfiber filter elements - series H: 10 bar
- Fluid flow through the filter element from OUT to IN

Seals
- Standard NBR series A
- Optional FPM series V

Temperature
From -25 °C to +110 °C

Note
MPTX filters are provided for vertical mounting



Weights [kg] and volumes [dm³]

Filter series	Weights [kg]					Volumes [dm³]				
	Length	1	2	3	4	Length	1	2	3	4
MPTX 025		0.41	0.45	0.50	-		0.24	0.35	0.42	-
MPTX 027		0.44	0.48	0.55	-		0.24	0.35	0.42	-
MPTX 110		1.00	1.05	1.15	1.40		0.72	0.93	1.28	1.74
MPTX 114		1.10	1.15	1.25	1.50		0.72	0.93	1.28	1.74
MPTX 116		1.10	1.15	1.25	1.50		0.72	0.93	1.28	1.74
MPTX 120		1.00	1.05	1.15	1.40		0.72	0.93	1.28	1.74

FILTER ASSEMBLY SIZING
Flow rates [l/min]

Filter series	Length	Filter element design - H series					Filter element design - N series		
		A03	A06	A10	A16	A25	M25 M60 M90	P10	P25
MPTX 025-027	**1**	7	10	23	28	42	59	51	54
	2	17	20	45	48	56	72	64	67
	3	21	24	50	55	59	76	74	75
MPTX 110-120 114-116	**1**	18	20	53	56	65	153	87	96
	2	28	38	65	75	95	158	111	123
	3	48	55	125	135	169	289	224	251
	4	79	89	180	185	198	306	264	289

Maximum flow rate for a complete return filter with a pressure drop Δp = 0.5 bar.
The reference fluid has a kinematic viscosity of 30 mm^2/s (cSt) and a density of 0.86 kg/dm^3.
For different pressure drop or fluid viscosity we recommend to use our selection software available on www.mpfiltri.com.
You can also calculate the right size using the formulas present on the FILTER SIZING paragraph at the beginning of the full catalogue or at the beginning of the filter family brochure.
Please, contact our Sales Department for further additional information.

Hydraulic symbols

Filter series	Style 1 connection	Style 2 connections	Style 3 connections
MPTX 025	•		
MPTX 027	•		
MPTX 110		•	
MPTX 114	•		
MPTX 116	•		
MPTX 120			•

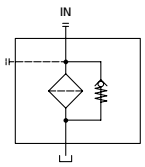

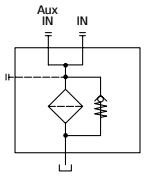

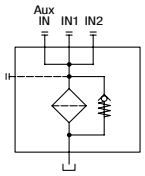

Pressure drop

Filter housings Δp pressure drop

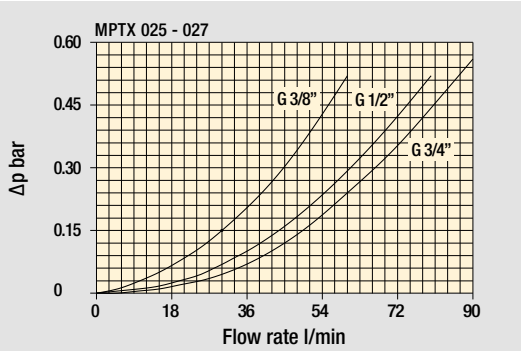

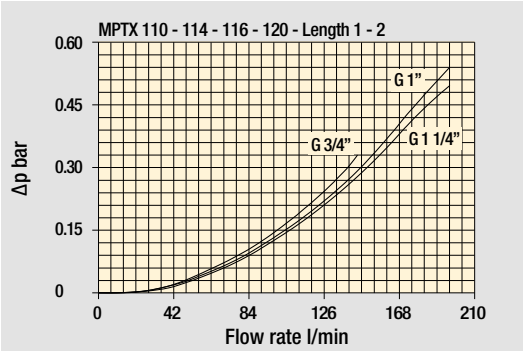

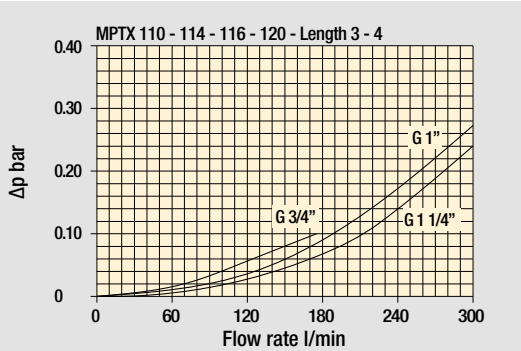

Bypass valve pressure drop

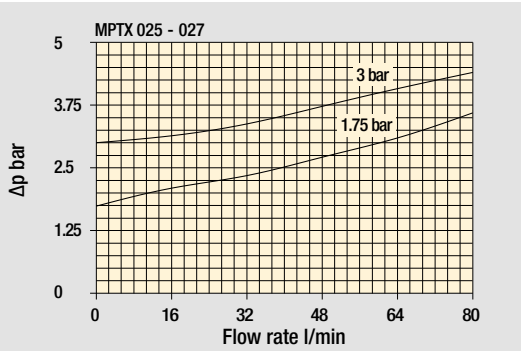

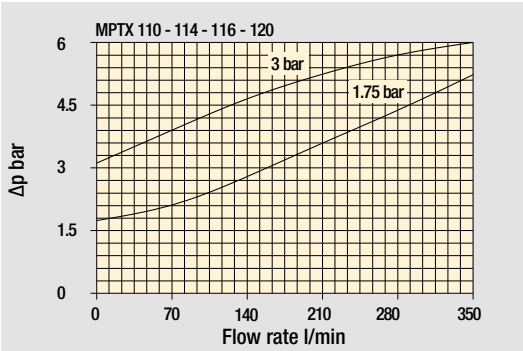

Air breather pressure drop

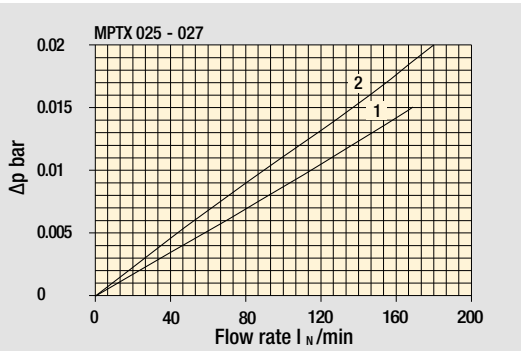

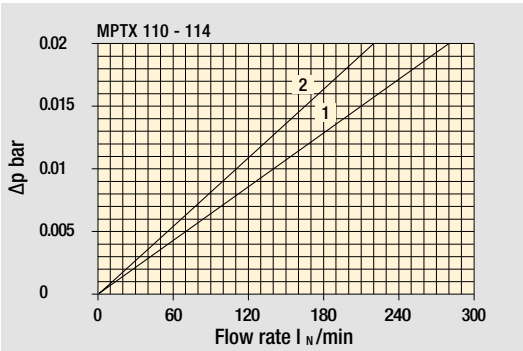

1 C With air breather 10 µm
2 D With anti-splash and SAP50 10 µm

The curves are plotted using mineral oil with density of 0.86 kg/dm³ in compliance with ISO 3968. Δp varies proportionally with density.

MPTX 025 -027		
Air breather port plugged Indicator port	Air breather standard Indicator port	Anti-splash air breather & pressurized Double indicator port
		

Multiport - Multifunction

MPTX 110	
Standard - Single IN Port	Double IN Port - Double indicator port
	
Double IN Port Option: double drain port	Double IN Port - Indicator port Option: drain port
	

MPTX 120
Triple IN port Option: double drain port


MPTX MPTX025 - MPTX027

Designation & Ordering code

COMPLETE FILTER

Configuration example 1:	MPTX025	1	S	A	G3	A10	E	P01
Configuration example 2:	MPTX027	3	C	W	G6	A03	B	P01

Series and size

MPTX025 | **MPTX027** Filter element with private spigot

Length

1 | **2** | **3** |

Air breather

S	Without air breather
C	With air breather 10 µm
D	With anti-splash and air breather SAP050 10 µm
P	With anti-splash and air breather SAP050 10 µm, pressurization 0.5 bar

Seals and treatments

		Filtration rating Axx	Mxx	Pxx
A	NBR	•	•	•
V	FPM	•	•	•
W	NBR head anodized	•	•	
Z	FPM head anodized	•	•	

filter element compatible with fluids HFA-HFB-HFC

Connections

G1	G 3/8”	**G6**	3/4” NPT
G2	G 1/2”	**G7**	SAE 6 - 9/16” - 18 UNF
G3	G 3/4”	**G8**	SAE 8 - 3/4” - 16 UNF
G4	3/8” NPT	**G9**	SAE 12 - 1 1/16” - 12 UN
G5	1/2” NPT		

Filtration rating (filter media)

A03	Inorganic microfiber 3 µm	**M25**	Wire mesh 25 µm
A06	Inorganic microfiber 6 µm	**M60**	Wire mesh 60 µm
A10	Inorganic microfiber 10 µm	**M90**	Wire mesh 90 µm
A16	Inorganic microfiber 16 µm	**P10**	Resin impregnated paper 10 µm
A25	Inorganic microfiber 25 µm	**P25**	Resin impregnated paper 25 µm

Bypass valve

E	3 bar
B	1.75 bar

Execution

P01	MP Filtri standard
Pxx	Customized

FILTER ELEMENT

Configuration example 2:	MFX020	1	A10	H	B	E	P01
Configuration example 1:	MFX020	3	A03	W	B		P01

Element series and size

MFX020 Filter element with private spigot

Element length

1 | **2** | **3** |

Filtration rating (filter media)

A03	Inorganic microfiber 3 µm	**M25**	Wire mesh 25 µm
A06	Inorganic microfiber 6 µm	**M60**	Wire mesh 60 µm
A10	Inorganic microfiber 10 µm	**M90**	Wire mesh 90 µm
A16	Inorganic microfiber 16 µm	**P10**	Resin impregnated paper 10 µm
A25	Inorganic microfiber 25 µm	**P25**	Resin impregnated paper 25 µm

Element Δp

		Filter media Axx	Mxx	Pxx
N	10 bar		•	•
H	10 bar	•		
W	10 bar, compatible with fluids HFA, HFB and HFC	•	•	

Seals

B	NBR
V	FPM

Bypass valve

E	3 bar
	1.75 bar

Execution

P01	MP Filtri standard
Pxx	Customized

ACCESSORIES

Indicators		page
BVA	Axial pressure gauge	240
BVR	Radial pressure gauge	240
BVP	Visual pressure indicator with automatic reset	241
BVQ	Visual pressure indicator with manual reset	241

Additional features		page
TE	Extension tube	248
DPT	Dipstick	249

		page
BEA	Electrical pressure indicator	239
BEM	Electrical pressure indicator	239
BLA	Electrical / visual pressure indicator	239-240

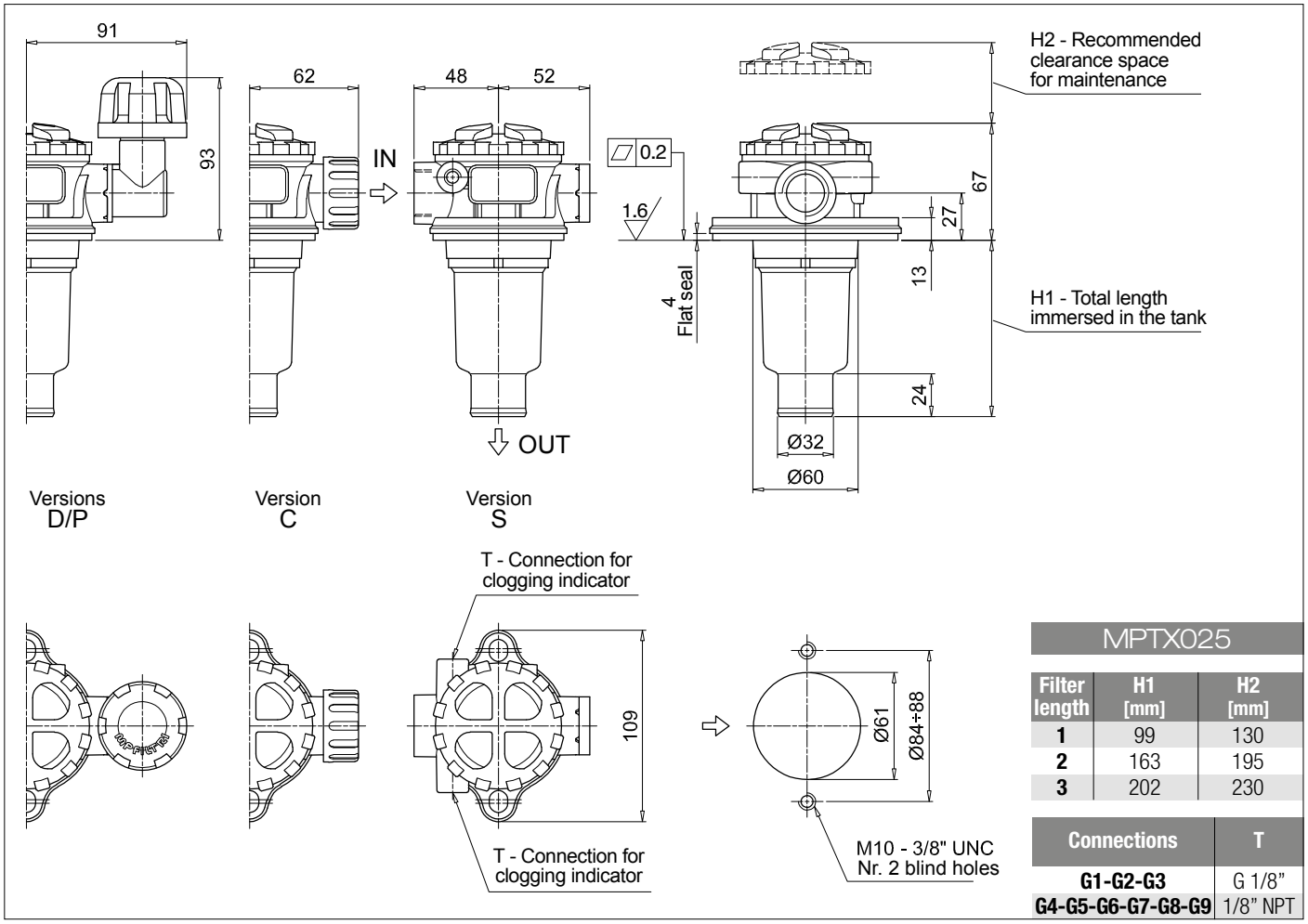

MPTX025

Filter length	H1 [mm]	H2 [mm]
1	99	130
2	163	195
3	202	230

Connections	T
G1-G2-G3	G 1/8"
G4-G5-G6-G7-G8-G9	1/8" NPT

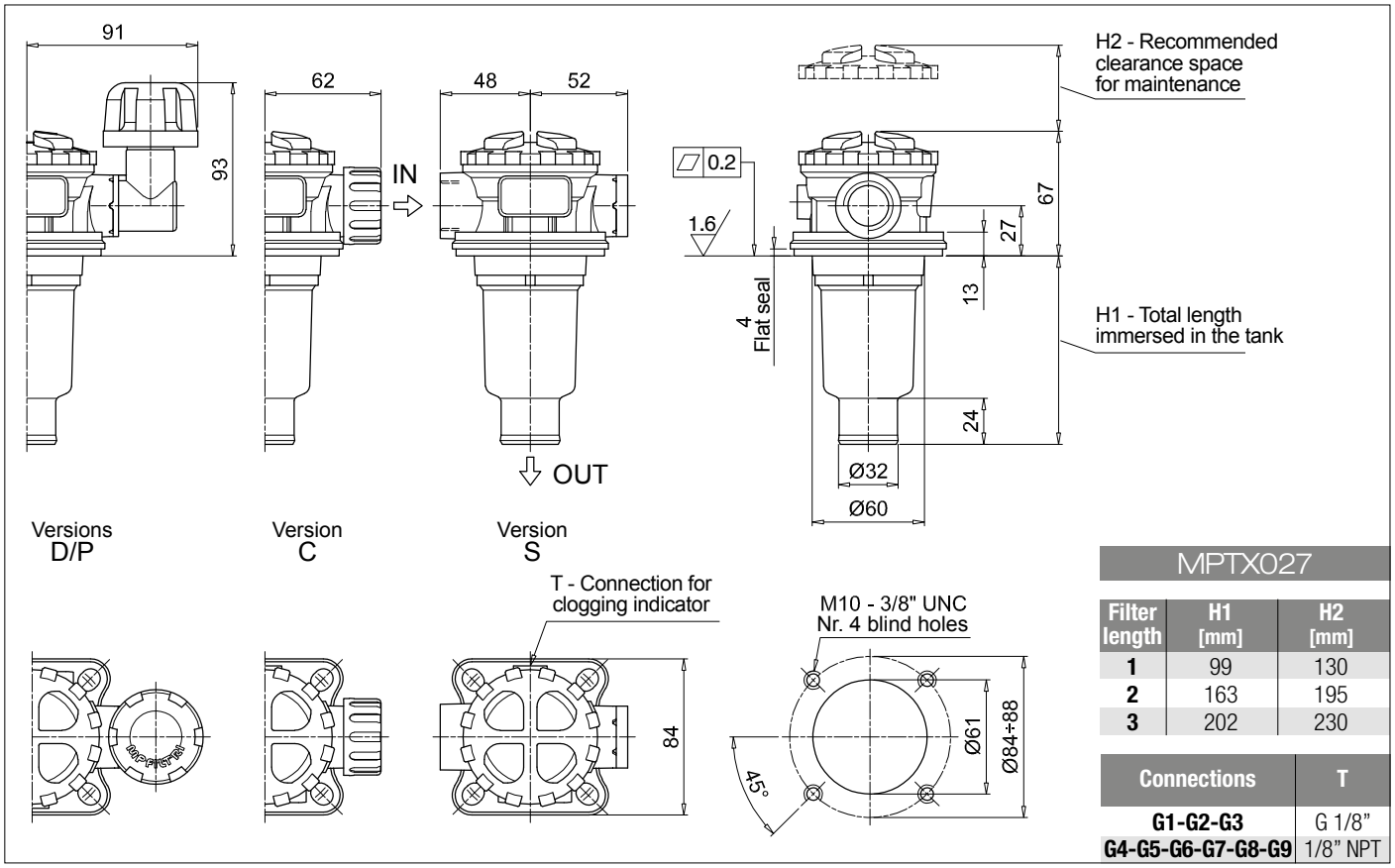

MPTX027

Filter length	H1 [mm]	H2 [mm]
1	99	130
2	163	195
3	202	230

Connections	T
G1-G2-G3	G 1/8"
G4-G5-G6-G7-G8-G9	1/8" NPT

MPTX MPTX110

Designation & Ordering code

COMPLETE FILTER

Configuration example 1:	MPTX110	1	S	A	G1	0	A06	E	P01
Configuration example 2:	MPTX110	3	P	V	G4	1	M25	B	P01

Series and size

MPTX110 Filter element with private spigot

Length

1 | **2** | **3** | **4**

Air breather

S	Without air breather
C	With air breather 10 µm
D	With anti-splash and air breather SAP050 10 µm
P	With anti-splash and air breather SAP050 10 µm, pressurization 0.5 bar

Seals and treatments

		Filtration rating Axx	Mxx	Pxx
A	NBR	•	•	•
V	FPM	•	•	•
W	NBR head anodized	•	•	
Z	FPM head anodized	•	•	

filter element compatible with fluids HFA-HFB-HFC

Main Connections		Aux size 1	Aux size 2
G1	G 3/4"	G 3/8"	G 1/2"
G2	G 1"		
G3	G 1 1/4"		
G4	3/4" NPT	3/8" NPT	1/2" NPT
G5	1" NPT		

Main Connections		Aux size 1	Aux size 2
G6	1 1/4" NPT	3/8" NPT	1/2" NPT
G7	SAE 12 - 1 1/16" - 12 UN	SAE 6 - 9/16" - 18 UNF	SAE 8 - 3/4" - 16 UNF
G8	SAE 16 - 1 5/16" - 12 UN		
G9	SAE 20 - 1 5/8" - 12 UN		

Aux connection - see previous table

0 Not machined **1** Aux size 1 **2** Aux size 2

Filtration rating (filter media)

A03	Inorganic microfiber 3 µm	**M25**	Wire mesh 25 µm
A06	Inorganic microfiber 6 µm	**M60**	Wire mesh 60 µm
A10	Inorganic microfiber 10 µm	**M90**	Wire mesh 90 µm
A16	Inorganic microfiber 16 µm	**P10**	Resin impregnated paper 10 µm
A25	Inorganic microfiber 25 µm	**P25**	Resin impregnated paper 25 µm

Bypass valve

E	3 bar
B	1.75 bar

Execution

P01	MP Filtri standard
Pxx	Customized

FILTER ELEMENT

Configuration example 1:	MFX100	1	A06	H	B	E	P01
Configuration example 2:	MFX100	3	M25	N	V		P01

Element series and size

MFX100 Filter element with private spigot

Element length

1 | **2** | **3** | **4**

Filtration rating (filter media)

A03	Inorganic microfiber 3 µm	**M25**	Wire mesh 25 µm
A06	Inorganic microfiber 6 µm	**M60**	Wire mesh 60 µm
A10	Inorganic microfiber 10 µm	**M90**	Wire mesh 90 µm
A16	Inorganic microfiber 16 µm	**P10**	Resin impregnated paper 10 µm
A25	Inorganic microfiber 25 µm	**P25**	Resin impregnated paper 25 µm

Element Δp

		Filter media Axx	Mxx	Pxx
N	10 bar		•	•
H	10 bar	•		
W	10 bar, compatible with fluids HFA, HFB and HFC	•	•	

Seals

B	NBR
V	FPM

Bypass valve

E	3 bar
	1.75 bar

Execution

P01	MP Filtri standard
Pxx	Customized

ACCESSORIES

Indicators

		page
BVA	Axial pressure gauge	240
BVR	Radial pressure gauge	240
BVP	Visual pressure indicator with automatic reset	241
BVQ	Visual pressure indicator with manual reset	241
BEA	Electrical pressure indicator	239
BEM	Electrical pressure indicator	239
BLA	Electrical / visual pressure indicator	239-240

Additional features

		page
TE	Extension tube	248
DFS	Diffuser with fast lock connection	249
DPT	Dipstick	249

MPTX110		
Filter length	**H1 [mm]**	**H2 [mm]**
1	99	120
2	144	170
3	222	250
4	324	350

Connections	T
G1-G2-G3	G 1/8"
G4-G5-G6-G7-G8-G9	1/8" NPT

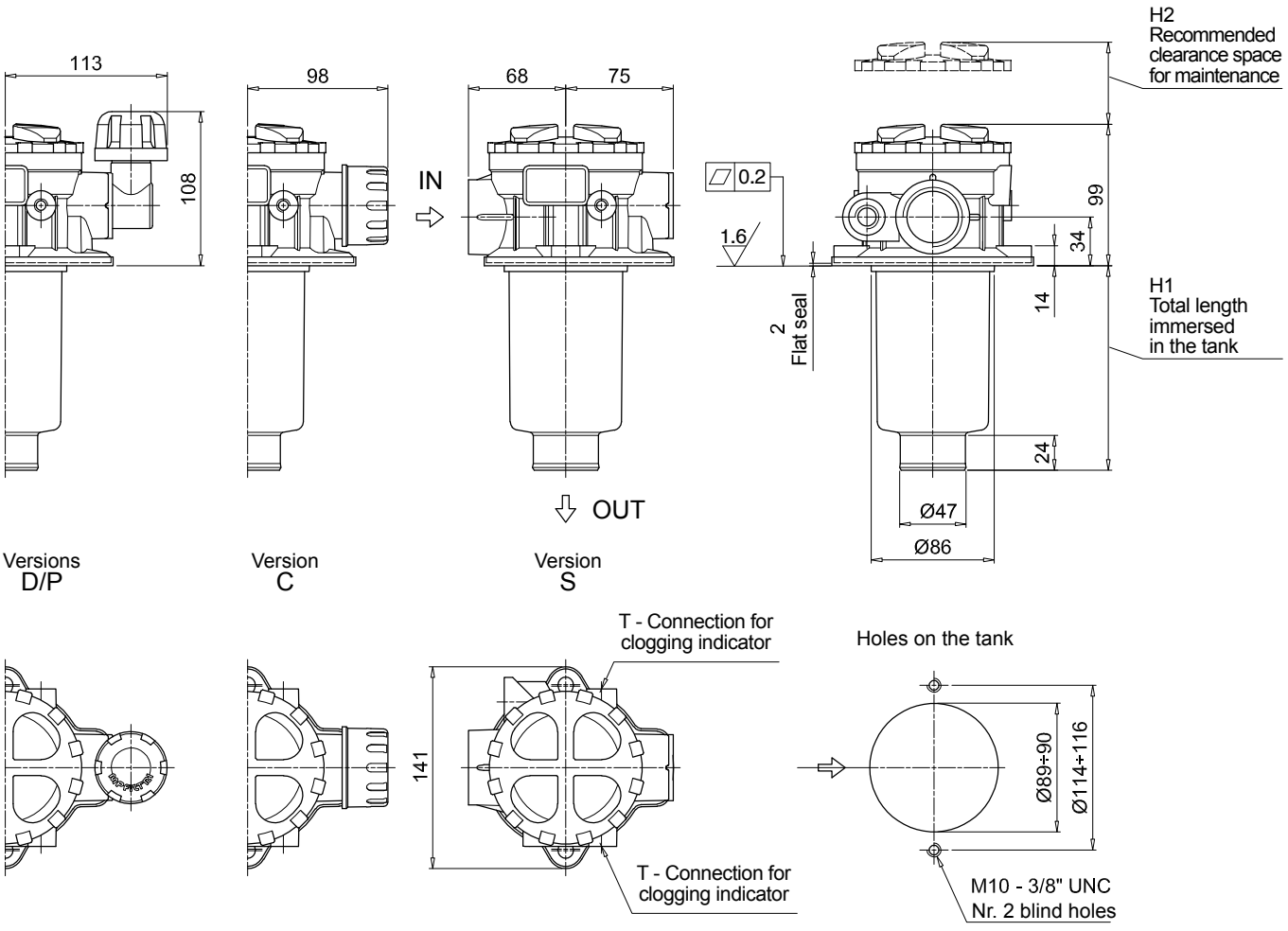

MPTX MPTX114

Designation & Ordering code

COMPLETE FILTER

Configuration example 1:	MPTX114	4	S	A	G3	A10	E	P01
Configuration example 2:	MPTX114	3	C	W	G6	A03	B	P01

Series and size

MPTX114 Filter element with private spigot

Length

1 | **2** | **3** | **4**

Air breather

S	Without air breather
C	With air breather 10 µm
D	With anti-splash and air breather SAP050 10 µm
P	With anti-splash and air breather SAP050 10 µm pressurization 0.5 bar

Seals and treatments

		Filtration rating Axx	Mxx	Pxx
A	NBR	•	•	•
V	FPM	•	•	•
W	NBR head anodized (filter element compatible with fluids HFA-HFB-HFC)	•	•	
Z	FPM head anodized (filter element compatible with fluids HFA-HFB-HFC)	•	•	

Connections

G1	G 3/4”	**G6**	1 1/4” NPT
G2	G 1”	**G7**	SAE 12 - 1 1/16” - 12 UN
G3	G 1 1/4”	**G8**	SAE 16 - 1 5/16” - 12 UN
G4	3/4” NPT	**G9**	SAE 20 - 1 5/8” - 12 UN
G5	1” NPT		

Filtration rating (filter media)

A03	Inorganic microfiber 3 µm	**M25**	Wire mesh 25 µm
A06	Inorganic microfiber 6 µm	**M60**	Wire mesh 60 µm
A10	Inorganic microfiber 10 µm	**M90**	Wire mesh 90 µm
A16	Inorganic microfiber 16 µm	**P10**	Resin impregnated paper 10 µm
A25	Inorganic microfiber 25 µm	**P25**	Resin impregnated paper 25 µm

Bypass valve

E	3 bar
B	1.75 bar

Execution

P01	MP Filtri standard
Pxx	Customized

FILTER ELEMENT

Configuration example 2:	MFX100	4	A10	H	B	E	P01
Configuration example 1:	MFX100	3	A03	W	B		P01

Element series and size

MFX100 Filter element with private spigot

Element length

1 | **2** | **3** | **4**

Filtration rating (filter media)

A03	Inorganic microfiber 3 µm	**M25**	Wire mesh 25 µm
A06	Inorganic microfiber 6 µm	**M60**	Wire mesh 60 µm
A10	Inorganic microfiber 10 µm	**M90**	Wire mesh 90 µm
A16	Inorganic microfiber 16 µm	**P10**	Resin impregnated paper 10 µm
A25	Inorganic microfiber 25 µm	**P25**	Resin impregnated paper 25 µm

Element Δp

		Filter media Axx	Mxx	Pxx
N	10 bar		•	•
H	10 bar	•		
W	10 bar, compatible with fluids HFA, HFB and HFC	•	•	

Seals

B	NBR
V	FPM

Bypass valve

E	3 bar
	1.75 bar

Execution

P01	MP Filtri standard
Pxx	Customized

ACCESSORIES

Indicators		page
BVA	Axial pressure gauge	240
BVR	Radial pressure gauge	240
BVP	Visual pressure indicator with automatic reset	241
BVQ	Visual pressure indicator with manual reset	241
BEA	Electrical pressure indicator	239
BEM	Electrical pressure indicator	239
BLA	Electrical / visual pressure indicator	239-240

Additional features		page
TE	Extension tube	248
DFS	Diffuser with fast lock connection	249
DPT	Dipstick	249

MPTX114		
Filter length	**H1 [mm]**	**H2 [mm]**
1	99	120
2	144	170
3	222	250
4	324	350

Connections	T
G1-G2-G3	G 1/8"
G4-G5-G6-G7-G8-G9	1/8" NPT

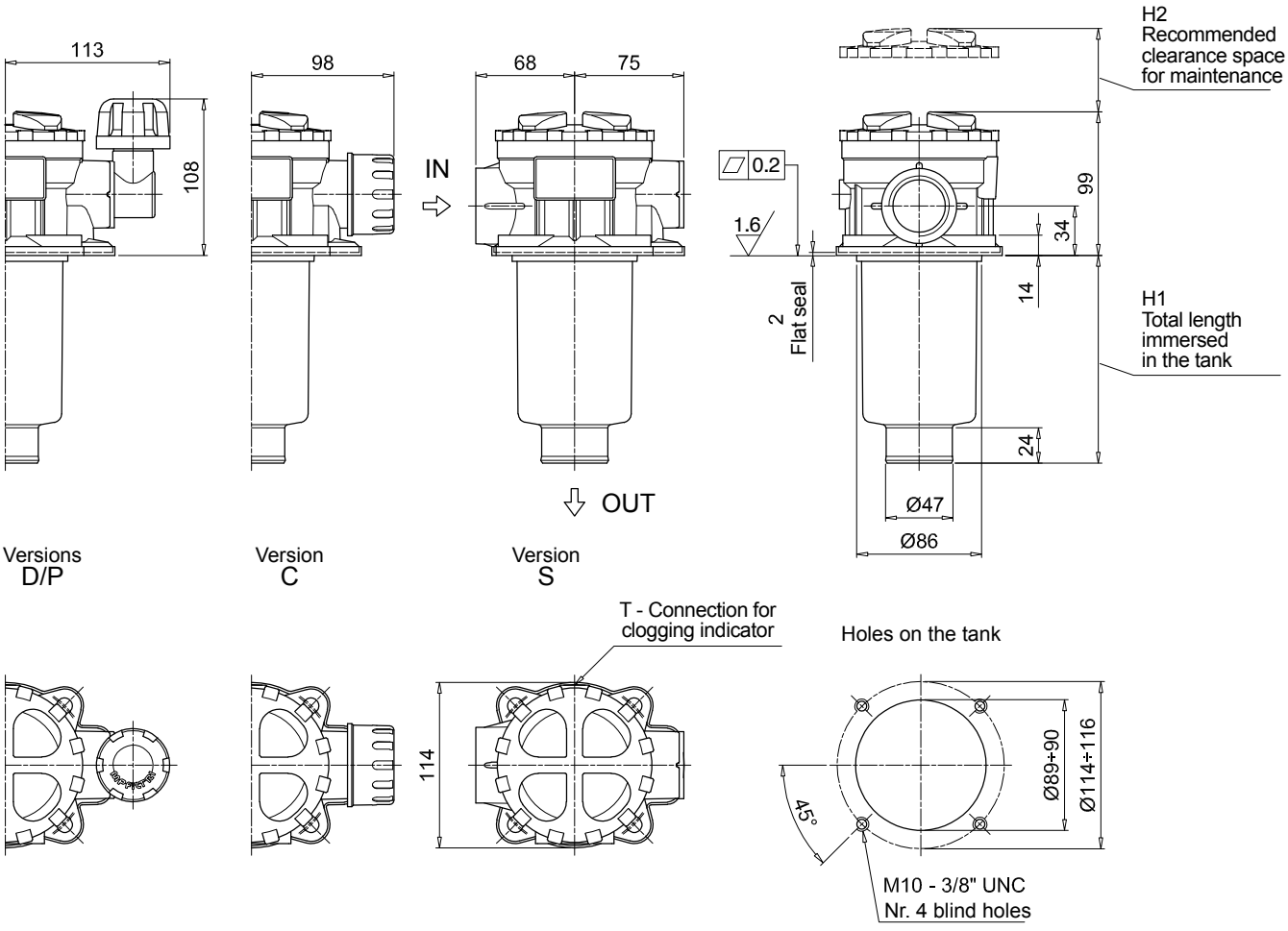

MPTX MPTX116

Designation & Ordering code

COMPLETE FILTER

Configuration example 1:	MPTX116	1	S	A	G1	M90	E	P01
Configuration example 2:	MPTX116	2	S	Z	G9	A03	B	P01

Series and size

MPTX116 Filter element with private spigot

Length

1 | **2** | **3** | **4**

Air breather

S Without air breather

Seals and treatments

		Filtration rating Axx	Mxx	Pxx
A	NBR	•	•	•
V	FPM	•	•	•
W	NBR head anodized	•	•	
Z	FPM head anodized	•	•	

filter element compatible with fluids HFA-HFB-HFC

Flat seal on the head on request

Connections

G1	G 3/4”	**G6**	1 1/4” NPT
G2	G 1”	**G7**	SAE 12 - 1 1/16” - 12 UN
G3	G 1 1/4”	**G8**	SAE 16 - 1 5/16” - 12 UN
G4	3/4” NPT	**G9**	SAE 20 - 1 5/8” - 12 UN
G5	1” NPT		

Filtration rating (filter media)

A03	Inorganic microfiber 3 µm	**M25**	Wire mesh 25 µm
A06	Inorganic microfiber 6 µm	**M60**	Wire mesh 60 µm
A10	Inorganic microfiber 10 µm	**M90**	Wire mesh 90 µm
A16	Inorganic microfiber 16 µm	**P10**	Resin impregnated paper 10 µm
A25	Inorganic microfiber 25 µm	**P25**	Resin impregnated paper 25 µm

Bypass valve

E	3 bar
B	1.75 bar

Execution

P01	MP Filtri standard
Pxx	Customized

FILTER ELEMENT

Configuration example 2:	MFX100	1	M90	N	B	E	P01
Configuration example 1:	MFX100	2	A03	W	V		P01

Element series and size

MFX100 Filter element with private spigot

Element length

1 | **2** | **3** | **4**

Filtration rating (filter media)

A03	Inorganic microfiber 3 µm	**M25**	Wire mesh 25 µm
A06	Inorganic microfiber 6 µm	**M60**	Wire mesh 60 µm
A10	Inorganic microfiber 10 µm	**M90**	Wire mesh 90 µm
A16	Inorganic microfiber 16 µm	**P10**	Resin impregnated paper 10 µm
A25	Inorganic microfiber 25 µm	**P25**	Resin impregnated paper 25 µm

Element Δp

		Filter media Axx	Mxx	Pxx
N	10 bar		•	•
H	10 bar	•		
W	10 bar, compatible with fluids HFA, HFB and HFC	•	•	

Seals

B	NBR
V	FPM

Bypass valve

E	3 bar
	1.75 bar

Execution

P01	MP Filtri standard
Pxx	Customized

ACCESSORIES

Indicators

		page
BVA	Axial pressure gauge	240
BVR	Radial pressure gauge	240
BVP	Visual pressure indicator with automatic reset	241
BVQ	Visual pressure indicator with manual reset	241
BEA	Electrical pressure indicator	239
BEM	Electrical pressure indicator	239
BLA	Electrical / visual pressure indicator	239-240

Additional features

		page
TE	Extension tube	248
DFS	Diffuser with fast lock connection	249
DPT	Dipstick	249

MPTX116		
Filter length	**H1 [mm]**	**H2 [mm]**
1	99	120
2	146	170
3	224	250
4	326	350

Connections	T
G1-G2-G3	G 1/8"
G4-G5-G6-G7-G8-G9	1/8" NPT

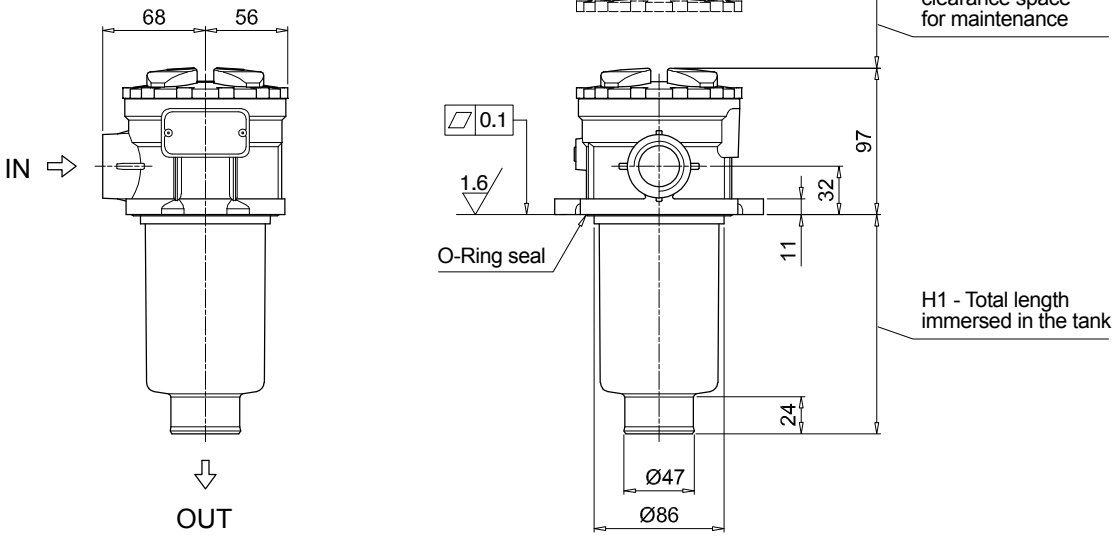

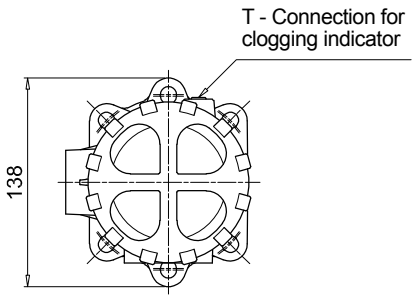

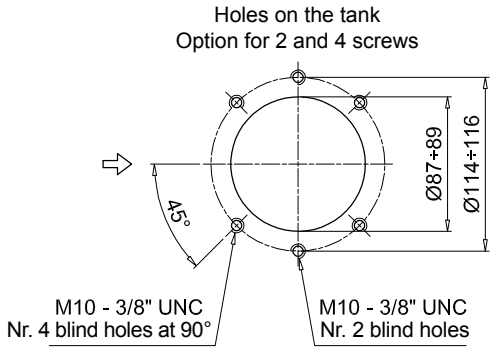

Designation & Ordering code

COMPLETE FILTER

Configuration example 1:	MPTX120	1	A	G1	0	A06	E	P01
Configuration example 2:	MPTX120	3	V	G4	1	M25	B	P01

Series and size

MPTX120 Filter element with private spigot

Length

1 | **2** | **3** | **4** |

Seals and treatments

		Filtration rating Axx	Mxx	Pxx
A	NBR	•	•	•
V	FPM	•	•	•
W	NBR head anodized	•	•	
Z	FPM head anodized	•	•	

filter element compatible with fluids HFA-HFB-HFC

Main Connections		Rear connections	Aux size 1	Aux size 2
G1	G 3/4"	G 3/4"	G 3/8"	G 1/2"
G2	G 1"	G 1"		
G3	G 1 1/4"	G 3/4"		
G4	3/4" NPT	3/4" NPT	3/8" NPT	1/2" NPT
G5	1" NPT	1" NPT		
G6	1 1/4" NPT	3/4" NPT		
G7	SAE 12 - 1 1/16" - 12 UN	SAE 12 - 1 1/16" - 12 UN	SAE 6 - 9/16" - 18 UNF	SAE 8 - 3/4" - 16 UNF
G8	SAE 16 - 1 5/16" - 12 UN	SAE 16 - 1 5/16" - 12 UN		
G9	SAE 20 - 1 5/8" - 12 UN	SAE 12 - 1 1/16" - 12 UN		

Aux connection - see previous table

0 Not machined **1** Aux size 1 **2** Aux size 2

Filtration rating (filter media)

A03	Inorganic microfiber 3 µm	**M25**	Wire mesh 25 µm
A06	Inorganic microfiber 6 µm	**M60**	Wire mesh 60 µm
A10	Inorganic microfiber 10 µm	**M90**	Wire mesh 90 µm
A16	Inorganic microfiber 16 µm	**P10**	Resin impregnated paper 10 µm
A25	Inorganic microfiber 25 µm	**P25**	Resin impregnated paper 25 µm

Bypass valve

E 3 bar
B 1.75 bar

Execution

P01 MP Filtri standard
Pxx Customized

FILTER ELEMENT

Configuration example 1:	MFX100	1	A06	H	B	E	P01
Configuration example 2:	MFX100	3	M25	N	V		P01

Element series and size

MFX100 Filter element with private spigot

Element length

1 | **2** | **3** | **4** |

Filtration rating (filter media)

A03	Inorganic microfiber 3 µm	**M25**	Wire mesh 25 µm
A06	Inorganic microfiber 6 µm	**M60**	Wire mesh 60 µm
A10	Inorganic microfiber 10 µm	**M90**	Wire mesh 90 µm
A16	Inorganic microfiber 16 µm	**P10**	Resin impregnated paper 10 µm
A25	Inorganic microfiber 25 µm	**P25**	Resin impregnated paper 25 µm

Element Δp

		Filter media Axx	Mxx	Pxx
N	10 bar		•	•
H	10 bar	•		
W	10 bar, compatible with fluids HFA, HFB and HFC	•	•	

Seals

B NBR
V FPM

Bypass valve

E 3 bar
1.75 bar

Execution

P01 MP Filtri standard
Pxx Customized

ACCESSORIES

Indicators		page
BVA	Axial pressure gauge	240
BVR	Radial pressure gauge	240
BVP	Visual pressure indicator with automatic reset	241
BVQ	Visual pressure indicator with manual reset	241
BEA	Electrical pressure indicator	239
BEM	Electrical pressure indicator	239
BLA	Electrical / visual pressure indicator	239-240

Additional features		page
TE	Extension tube	248
DFS	Diffuser with fast lock connection	249
DPT	Dipstick	249

MPTX120		
Filter length	**H1 [mm]**	**H2 [mm]**
1	99	120
2	144	170
3	222	250
4	324	350

Connections	T
G1-G2-G3	G 1/8"
G4-G5-G6-G7-G8-G9	1/8" NPT

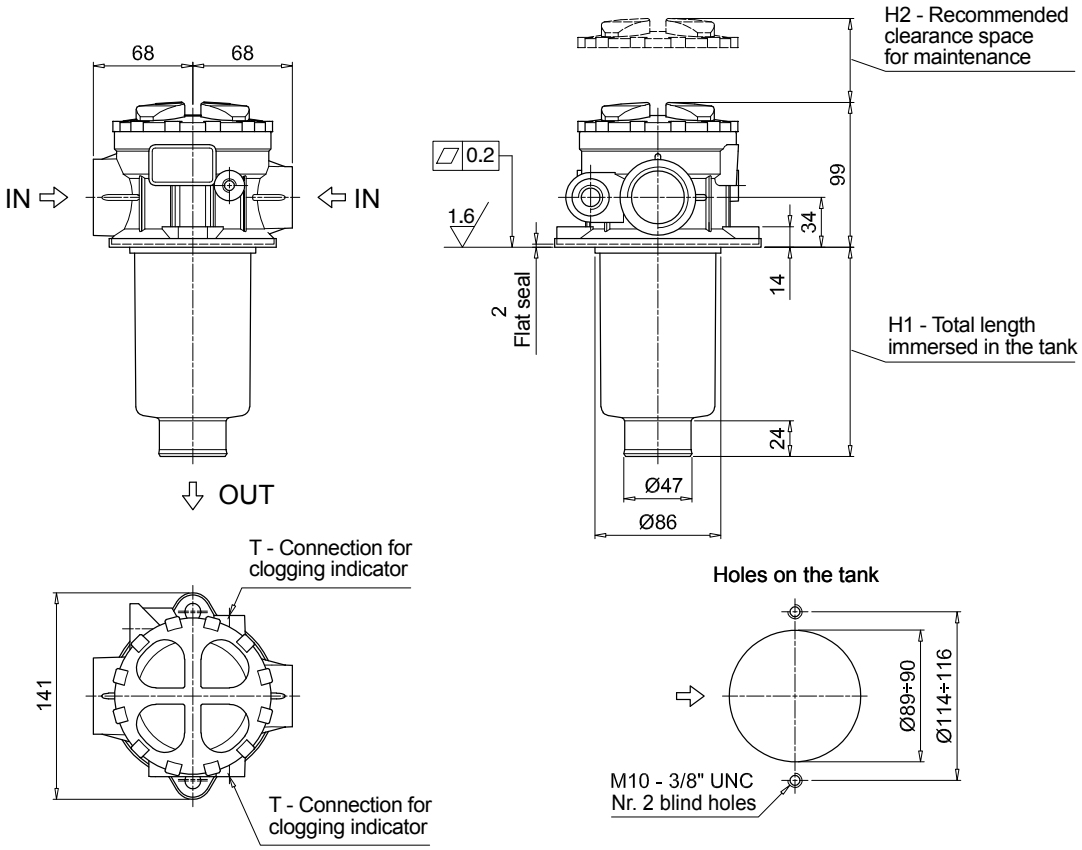

MPTX SPARE PARTS

Order number for spare parts

MPTX 025 - 027 - 110

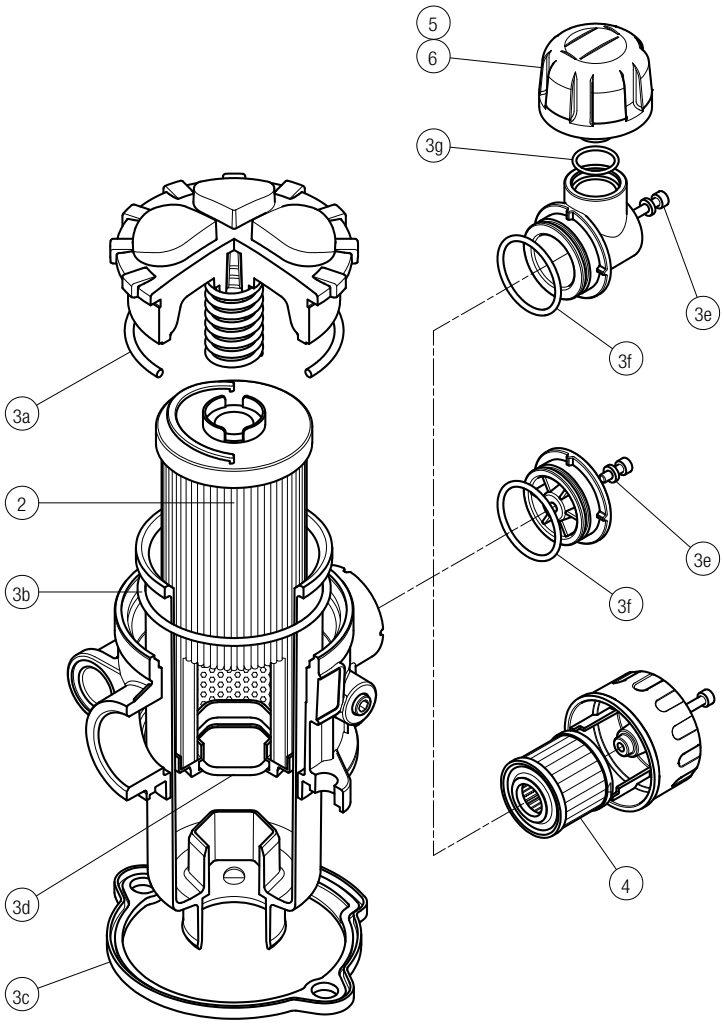

Item:	Q.ty: 1 pc. 2	Q.ty: 1 pc. 3 (3a ÷ 3g)		Q.ty: 1 pc. 4	Q.ty: 1 pc. 5	Q.ty: 1 pc. 6
Filter series	**Filter element**	**Seal Kit code number**		**Air breather filter element - version:**		
		NBR	**FPM**	**C**	**D**	**P**
MPTX 025	See order table	02050701	02050702	10 µm A3L03	10 µm SAP50G3L03A0P01	10 µm SAP50G3L03A1P01
MPTX 027		02050703	02050704	10 µm A3L03	10 µm SAP50G3L03A0P01	10 µm SAP50G3L03A1P01
MPTX 110		02050709	02050710	10 µm A5L03	10 µm SAP50G3L03A0P01	10 µm SAP50G3L03A1P01

MPTX 116

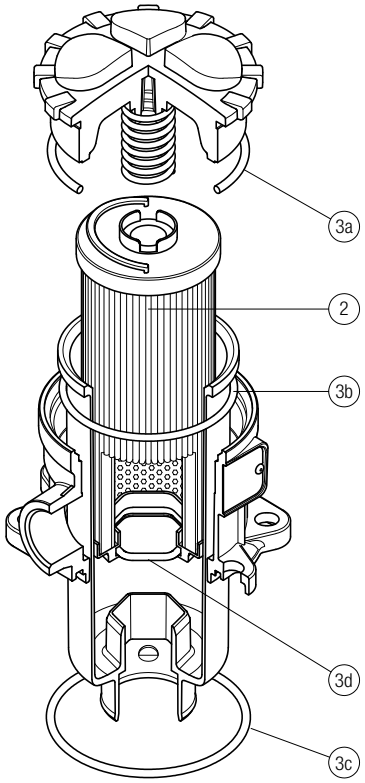

Item:	Q.ty: 1 pc. 2	Q.ty: 1 pc. 3 (3a ÷ 3d)	
Filter series	**Filter element**	**Seal Kit code number**	
		NBR	**FPM**
MPTX 116	See order table	02050737	02050738

Order number for spare parts

MPTX 114

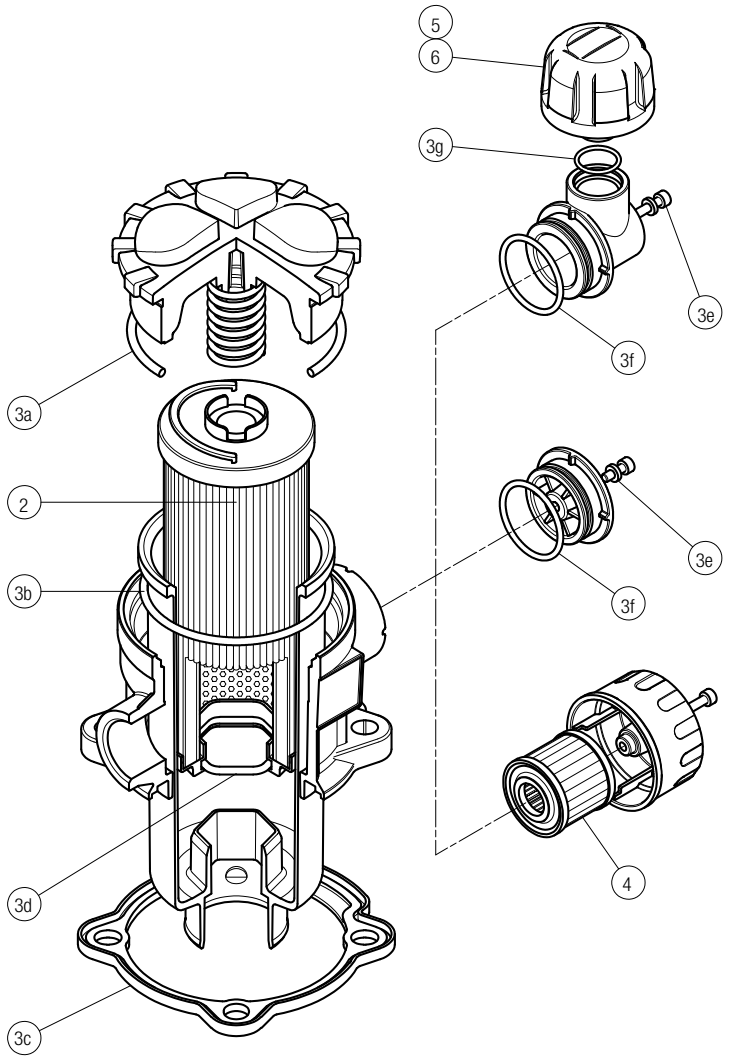

Item:	Q.ty: 1 pc. 2	Q.ty: 1 pc. 3 (3a ÷ 3g)		Q.ty: 1 pc. 4	Q.ty: 1 pc. 5	Q.ty: 1 pc. 6
Filter series	Filter element	Seal Kit code number NBR	FPM	Air breather filter element - version: C	D	P
MPTX 114	See order table	02050707	02050708	10 µm A5L03	10 µm SAP50G3L03A0P01	10 µmm SAP50G3L03A1P01

MPTX 120

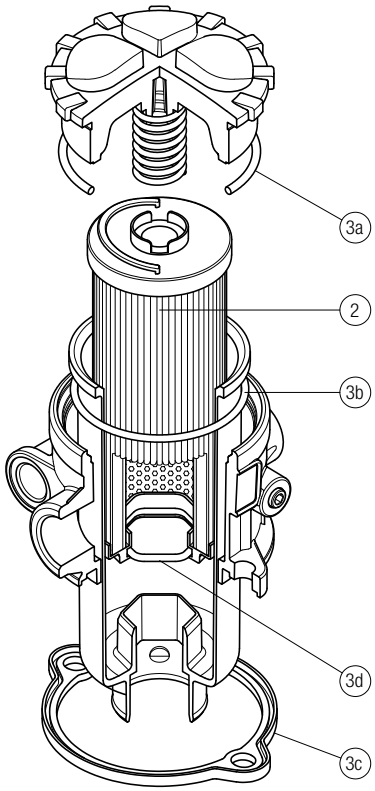

Item:	Q.ty: 1 pc. 2	Q.ty: 1 pc. 3 (3a ÷ 3d)	
Filter series	Filter element	Seal Kit code number NBR	FPM
MPTX 120	See order table	02050711	02050712

MFBX series
BOWL ASSEMBLY

Maximum working pressure up to 800 kPa (8 bar) - Flow rate up to 700 l/min



MFBX GENERAL INFORMATION

Description

Return filter | Bowl assembly

Maximum working pressure up to 800 kPa (8 bar)
Flow rate up to 700 l/min

MFBX is a range of return filter kits for protection of the reservoir against the system contamination.
They are directly integrated in the moulded reservoir in immersed or semi-immersed position to save space into the tank.
Treaded or flanged covers can be provided.
The filter output must be always immersed into the fluid to avoid aeration or foam generation into the reservoir.

Available features:
- Fine filtration rating, to get a good cleanliness level into the reservoir
- Bypass valve integrated into the filter element, to relieve excessive pressure drop across the filter media
- Extension tube, to be used in deep reservoirs (sold as separate item)
- Diffuser, to reduce the risk of aeration, foaming and noise (sold as separate item)
- MyClean interface connection, to protect the product against non-original spare parts
- External protective wrap, to optimize the flow through the element and to save the element efficiency against non-proper handling

Common applications:
Mobile machines

Technical data

Bowl assembly materials
- Cover
  Nylon: MFBX 020-030-100
  Aluminium: MFBX 180-190

- Bowl: Nylon

Filter element materials
- Caps: Nylon
- Spring: Spring steel

Bypass valve
- Opening pressure 175 kPa (1.75 bar) ±10%
- Opening pressure 300 kPa (3 bar) ±10%

Δp element type
- Microfibre filter elements - series H: 10 bar
- Fluid flow through the filter element from OUT to IN

Seals
- Standard NBR series A
- Optional FPM series V

Temperature
From -25 °C to +110 °C

Note
MFBX filters are provided for vertical mounting



Weights [kg] and volumes [dm³]

Filter series	Weights [kg]					Volumes [dm³]				
	Length	1	2	3	4	Length	1	2	3	4
MFBX 020		0.25	0.35	0.40	-		0.10	0.15	0.20	-
MFBX 030		0.25	-	-	-		0.15	-	-	-
MFBX 100		0.50	0.60	0.75	0.95		0.35	0.50	0.80	1.10
MFBX 180		1.60	2.40	-	-		1.50	2.90	-	-
MFBX 190		-	2.40	-	-		-	3.00	-	-

FILTER ASSEMBLY SIZING
Flow rates [l/min]

Filter series	Length	Filter element design - H series					Filter element design - N series		
		A03	A06	A10	A16	A25	M25 M60 M90	P10	P25
MFBX 020	1	7	10	23	28	42	59	51	54
	2	17	20	45	48	56	72	64	67
	3	21	24	50	55	59	76	74	75
MFBX 030	1	7	10	24	29	47	84	60	66
MFBX 100	1	18	20	53	56	65	153	87	96
	2	28	38	65	75	95	158	111	123
	3	48	55	125	135	169	289	224	251
	4	79	89	180	185	198	306	264	289
MFBX 180	1	127	148	235	243	278	441	285	299
	2	231	262	358	382	388	472	404	412
MFBX 190	2	261	305	489	528	546	696	583	598

Maximum flow rate for a complete return filter with a pressure drop Δp = 0.5 bar.
The reference fluid has a kinematic viscosity of 30 mm^2/s (cSt) and a density of 0.86 kg/dm^3.
For different pressure drop or fluid viscosity we recommend to use our selection software available on www.mpfiltri.com.
You can also calculate the right size using the formulas present on the FILTER SIZING paragraph at the beginning of the full catalogue or at the beginning of the filter family brochure.
Please, contact our Sales Department for further additional information.

Hydraulic symbols

Filter series	Style 1 connection
MFBX 020	•
MFBX 030	•
MFBX 100	•
MFBX 180	•
MFBX 190	•

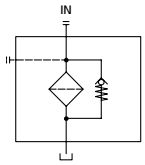

Designation & Ordering code

COMPLETE FILTER

Configuration example 1: MFBX100 | 1 | A | 2 | A10 | H | E | P01

Configuration example 2: MFBX180 | 2 | V | 1 | M25 | N | B | P01

Series and size

MFBX020 | MFBX030 | MFBX100 | MFBX180 | MFBX190

Filter element with private spigot

Length	MFBX020	MFBX030	MFBX100	MFBX180	MFBX190
1	•	•	•	•	
2	•		•	•	•
3	•		•		
4			•		

Seals

A NBR

V FPM

Version	MFBX020	MFBX030	MFBX100	MFBX180	MFBX190
1 Without cover	•	•	•	•	•
2 With flanged cover type MPF		•	•	•	•
3 With threaded cover type MPT	•		•		

Filtration rating (filter media)

A03 Inorganic microfiber 3 µm
A06 Inorganic microfiber 6 µm
A10 Inorganic microfiber 10 µm
A16 Inorganic microfiber 16 µm
A25 Inorganic microfiber 25 µm
M25 Wire mesh 25 µm
M60 Wire mesh 60 µm
M90 Wire mesh 90 µm
P10 Resin impregnated paper 10 µm
P25 Resin impregnated paper 25 µm

Element Δp	Filter media Axx	Mxx	Pxx
N 10 bar		•	•
H 10 bar	•		
W 10 bar, compatible with fluids HFA, HFB and HFC	•	•	

Bypass valve

E 3 bar
B 1.75 bar

Execution

P01 MP Filtri standard
Pxx Customized

FILTER ELEMENT

Configuration example 1: MFX180 | 2 | M25 | H | V | | P01

Configuration example 2: MFX100 | 1 | A10 | N | B | E | P01

Element series and size

MFX020 | MFX030 | MFX100 | MFX180

Filter element with private spigot

Element length	MFX020	MFX030	MFX100	MFX180	MFX190
1	•	•	•	•	
2	•		•	•	•
3	•		•		
4			•		

Filtration rating (filter media)

A03 Inorganic microfiber 3 µm
A06 Inorganic microfiber 6 µm
A10 Inorganic microfiber 10 µm
A16 Inorganic microfiber 16 µm
A25 Inorganic microfiber 25 µm
M25 Wire mesh 25 µm
M60 Wire mesh 60 µm
M90 Wire mesh 90 µm
P10 Resin impregnated paper 10 µm
P25 Resin impregnated paper 25 µm

Element Δp	Filter media Axx	Mxx	Pxx
N 10 bar		•	•
H 10 bar	•		

Seals

B NBR
V FPM

Bypass valve

E 3 bar
1.75 bar

Execution

P01 MP Filtri standard
Pxx Customized

ACCESSORIES

Additional features	MFBX020	MFBX030	MFBX100	MFBX180	MFBX190	page
TE Extension tube	•	•	•	•	•	248
DFS Diffuser with fast lock connection			•			249

MFBX

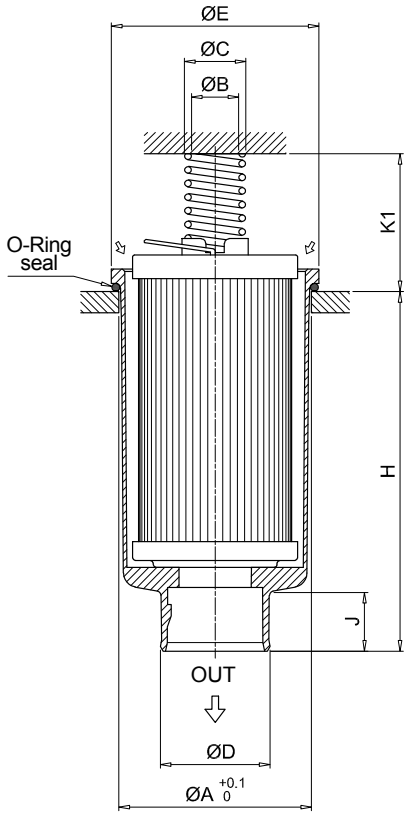

Version 1

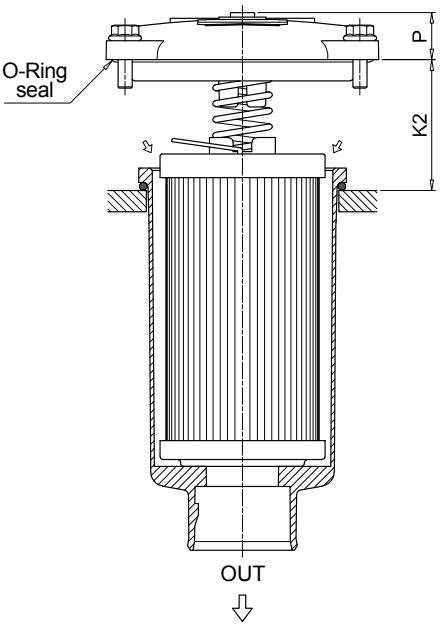

Version 2

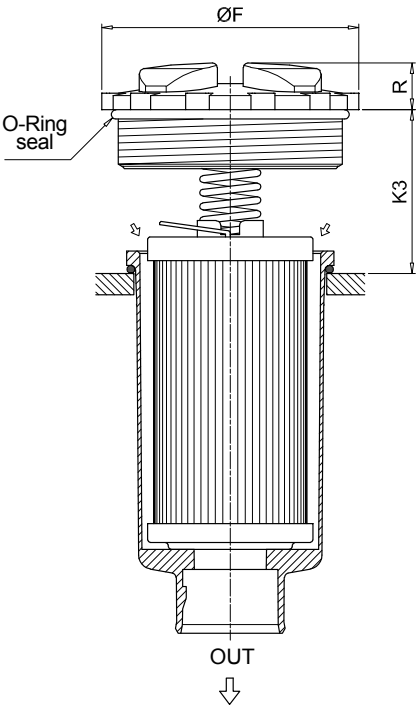

Version 3

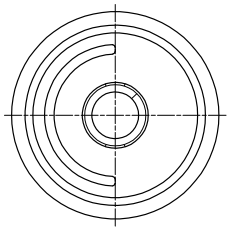

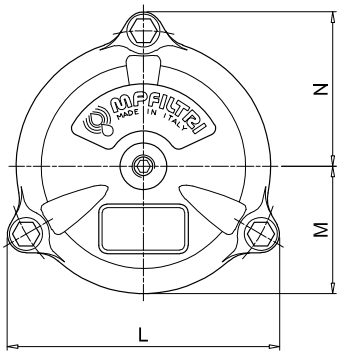

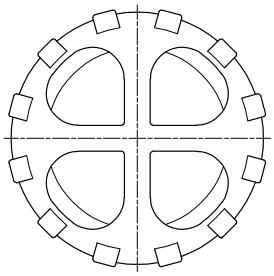

Filter size	Filter Length	ø A [mm]	ø B [mm]	ø C [mm]	ø D [mm]	ø E [mm]	ø F [mm]	H [mm]	J [mm]	K1 [mm]	K2 [mm]	K3 [mm]	L [mm]	M [mm]	N [mm]	P [mm]	R [mm]
020	1	52	20.5	26	32	56	75	111	24	42	-	36	-	-	-	-	18
	2	52	20.5	26	32	56	75	175	24	42	-	36	-	-	-	-	18
	3	52	20.5	26	32	56	75	214	24	42	-	36	-	-	-	-	18
030	1	60.5	20	25.5	32	68	-	93	21	33	35	-	92	42	52	18	-
100	1	80.5	20	26	47	88	111	109	24	58	55	69	116	54	66	20	20
	2	80.5	20	26	47	88	111	154	24	58	55	69	116	54	66	20	20
	3	80.5	20	26	47	88	111	232	24	58	55	69	116	54	66	20	20
	4	80.5	20	26	47	88	111	334	24	58	55	69	116	54	66	20	20
180	1	112.5	26	33.5	47	121	-	234	31	58	69	-	159	76	95	21	-
	2	112.5	26	33.5	47	121	-	447	31	58	69	-	159	76	95	21	-
190	2	112.5	26	33.5	50	121	-	454	38	58	69	-	159	76	95	21	-

MFBX SPARE PARTS

Order number for spare parts

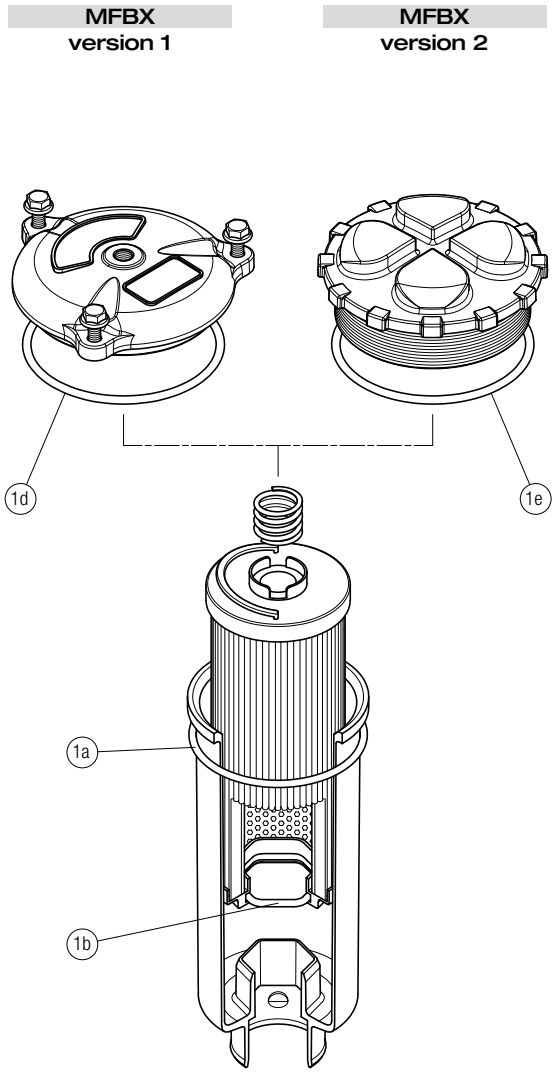

Item:	Q.ty: 1 pc. (1) (1a ÷ 1d)	
Filter series	Seal Kit code number NBR	FPM
MFBX 020	02050713	02050714
MFBX 030	02050715	02050716
MFBX 100	02050717	02050718
MFBX 180-190	02050719	02050720

MPF series

Maximum working pressure up to 800 kPa (8 bar) - Flow rate up to 900 l/min



MPF GENERAL INFORMATION

Description

Return filter

Maximum working pressure up to 800 kPa (8 bar)
Flow rate up to 900 l/min

MPF is a range of return filters for protection of the reservoir against the system contamination.
They are directly fixed to the reservoir, in immersed or semi-immersed position.
The filter output must be always immersed into the fluid to avoid aeration or foam generation into the reservoir.

Available features:

- Female threaded connections up to 2" and flanged connections up to 2", for a maximum flow rate of 900 l/min
- Multiple connections, to connect several return lines or drains
- Fine filtration rating, to get a good cleanliness level into the reservoir
- Bypass valve integrated into the filter element, to relieve excessive pressure drop across the filter media
- 2, 3 or 4 fixing holes for installation, to suit a variety of reservoir surfaces
- O-ring or Flat Seal to suit a variety of reservoir surfaces
- Oil dipstick, to easily check the level of the fluid into the reservoir (sold as separate item)
- Extension tube, to be used in deep reservoirs (sold as separate item)
- Diffuser, to reduce the risk of aeration, foaming and noise (sold as separate item)
- Filler plug, to fill cleaned fluid into the tank without an additional connection
- Visual, electrical and electronic clogging indicators

Common applications:

- Light industrial equipment
- Mobile application

Technical data

Filter housing materials

- Head: Aluminium

- Cover
  Nylon: MPF 020-030-100-104-110
  Aluminium: MPF 181-182-184-191-192-194-400-410-450-451-750

- Bowl: Nylon

Bypass valve

- Opening pressure 175 kPa (1.75 bar) ±10%
- Opening pressure 300 kPa (3 bar) ±10%

Δp element type

- Microfibre filter elements - series H: 10 bar
- Fluid flow through the filter element from OUT to IN

Seals

- Standard NBR series A
- Optional FPM series V

Temperature

From -25 °C to +110 °C

Note

MPF filters are provided for vertical mounting



Weights [kg] and volumes [dm³]

Filter series	Weights [kg]					Volumes [dm³]				
	Length	1	2	3	4	Length	1	2	3	4
MPF 020		0.30	-	-	-		0.26	-	-	-
MPF 030		0.40	-	-	-		0.29	-	-	-
MPF 100		0.61	0.64	0.67	0.74		0.64	0.85	1.20	1.65
MPF 104		0.82	0.96	1.02	1.25		0.64	0.85	1.20	1.65
MPF 110		0.64	0.68	0.71	0.78		-	-	-	-
MPF 181		2.20	3.00	-	-		2.50	4.00	-	-
MPF 182		2.30	3.10	-	-		2.50	4.00	-	-
MPF 184		2.55	3.45	-	-		2.65	4.45	-	-
MPF 191		-	3.00	-	-		-	4.25	-	-
MPF 192		-	3.10	-	-		-	4.25	-	-
MPF 194		-	3.45	-	-		-	4.45	-	-
MPF 400		3.35	3.65	3.90	-		3.70	4.60	5.40	-
MPF 410		3.55	3.85	4.10	-		3.70	4.60	5.40	-
MPF 450-451		3.95	4.25	4.50	-		3.70	4.60	5.40	-
MPF 750		6.30	-	-	-		8.45	-	-	-

FILTER ASSEMBLY SIZING
Flow rates [l/min]

Filter series	Length	Filter element design - H series					Filter element design - N series		
		A03	A06	A10	A16	A25	M25 M60 M90	P10	P25
MPF 020	**1**	7	10	23	28	42	59	51	54
MPF 030	**1**	7	10	24	29	47	84	60	66
MPF 100-104-110	**1**	18	20	53	56	65	153	87	96
	2	28	38	65	75	95	158	111	123
	3	48	55	125	135	169	289	224	251
	4	79	89	180	185	198	306	264	289
MPF 181-182-184	**1**	127	148	235	243	278	441	285	299
	2	231	262	358	382	388	472	404	412
MPF 191-192-194	**2**	261	305	489	528	546	696	583	598
MPF 400	**1**	150	171	294	304	350	585	370	390
	2	237	252	454	462	589	868	619	645
	3	248	288	553	609	621	885	680	703
MPF 410	**1**	146	167	277	285	325	512	341	357
	2	226	239	396	402	485	644	503	519
	3	236	269	462	497	505	653	539	553
MPF 450-451	**1**	150	171	294	304	350	585	370	390
	2	237	252	454	462	589	868	619	645
	3	248	288	553	609	621	885	680	703
MPF 750	**1**	392	465	623	700	769	929	804	819

Maximum flow rate for a complete return filter with a pressure drop Δp = 0.5 bar.
The reference fluid has a kinematic viscosity of 30 mm^2/s (cSt) and a density of 0.86 kg/dm^3.
For different pressure drop or fluid viscosity we recommend to use our selection software available on www.mpfiltri.com.
You can also calculate the right size using the formulas present on the FILTER SIZING paragraph at the beginning of the full catalogue or at the beginning of the filter family brochure.
Please, contact our Sales Department for further additional information.

Hydraulic symbols

Filter series	Style 1 connection	Style 2 connections
MPF 020	•	
MPF 030	•	
MPF 100	•	
MPF 104	•	
MPF 110		•
MPF 181	•	
MPF 182		•
MPF 184	•	•
MPF 191	•	
MPF 192	•	
MPF 194	•	•
MPF 400	•	
MPF 410		•
MPF 450	•	
MPF 451		•
MPF 750	•	

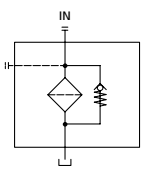

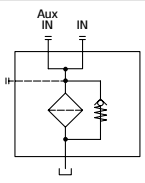

Pressure drop

Filter housings Δp pressure drop

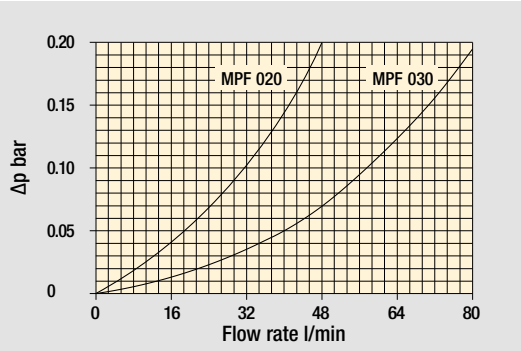

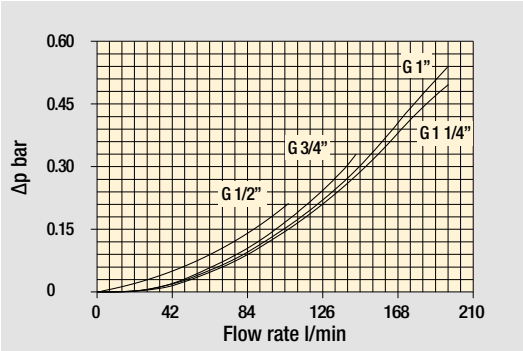

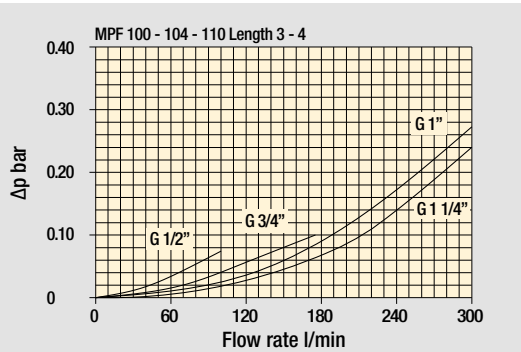

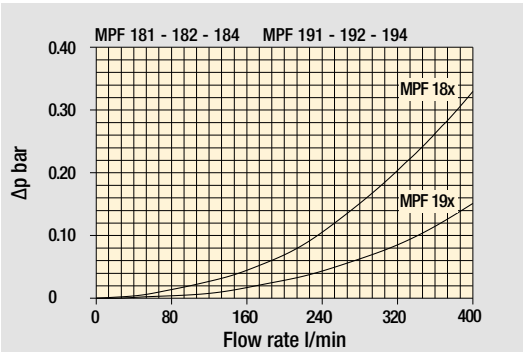

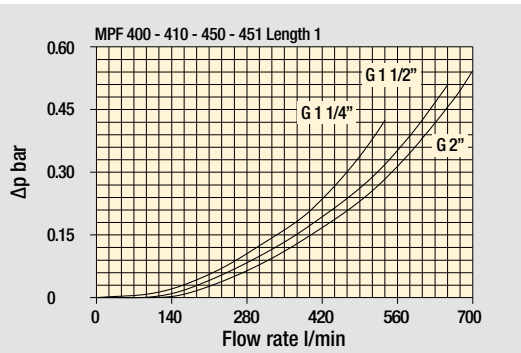

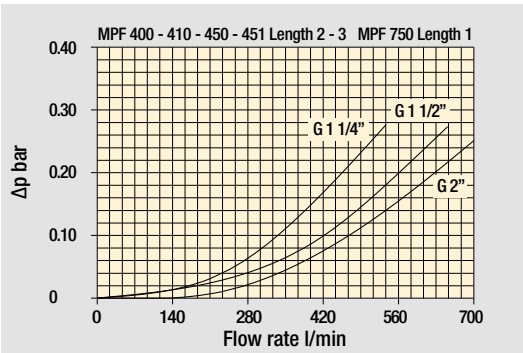

Bypass valve pressure drop

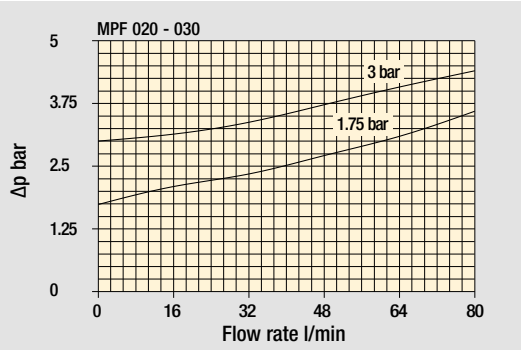

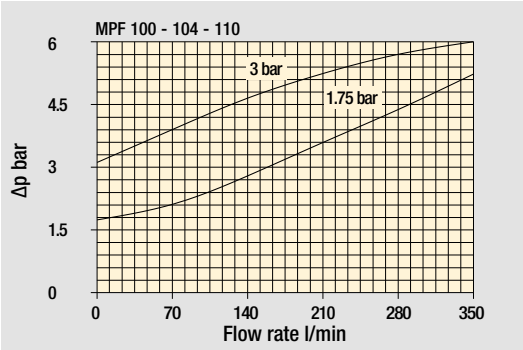

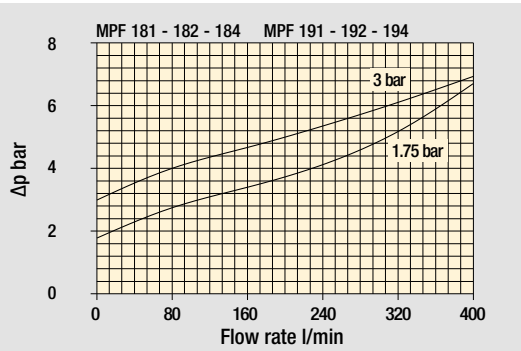

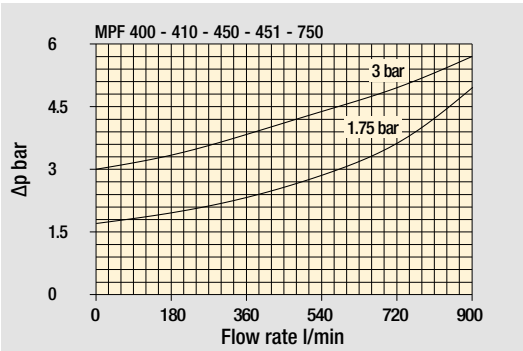

The curves are plotted using mineral oil with density of 0.86 kg/dm³ in compliance with ISO 3968. Δp varies proportionally with density.

Standard - Single IN port



Double IN port
Option: double indicator port

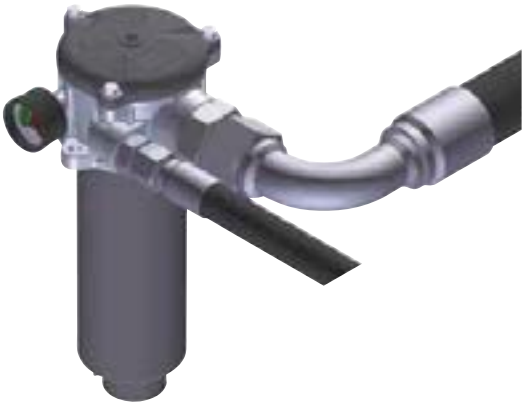

Double IN port - Drain port
Option: indicator port



Double IN port - Double drain port

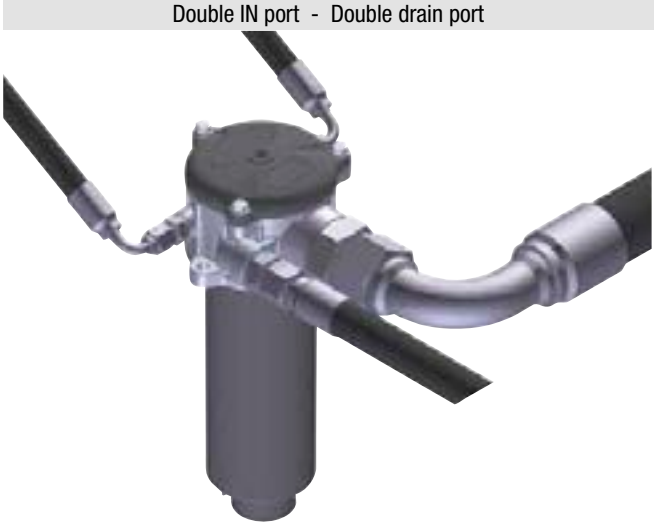

Designation & Ordering code

COMPLETE FILTER

Configuration example 1: MPF020 | 1 | A | P1 | A10 | H | E | P01
Configuration example 2: MPF030 | 1 | V | G1 | M25 | N | B | P01

Series and size
MPF020 | **MPF030** Filter element with standard spigot

Length
1

Seals and treatments
A NBR
V FPM
W NBR head anodized
Z FPM head anodized

Connections	Size 20	Size 30
P1 Hose barb ø12	•	
G1 G 1/2"		•
G4 1/2" NPT		•
G7 SAE 8 - 3/4" - 16 UNF		•

Filtration rating (filter media)

A03	Inorganic microfiber 3 µm	**M25**	Wire mesh 25 µm
A06	Inorganic microfiber 6 µm	**M60**	Wire mesh 60 µm
A10	Inorganic microfiber 10 µm	**M90**	Wire mesh 90 µm
A16	Inorganic microfiber 16 µm	**P10**	Resin impregnated paper 10 µm
A25	Inorganic microfiber 25 µm	**P25**	Resin impregnated paper 25 µm

		Filter media		
Element Δp		Axx	Mxx	Pxx
N	10 bar		•	•
H	10 bar	•		
W	10 bar, compatible with fluids HFA, HFB and HFC	•	•	

Bypass valve
E 3 bar
B 1.75 bar

Execution
P01 MP Filtri standard
Pxx Customized

FILTER ELEMENT

Configuration example 1: MF030 | 1 | A10 | H | B | E | P01
Configuration example 2: MF030 | 1 | M25 | N | V | | P01

Element series and size
MF030 Filter element with standard spigot

Element length
1

Filtration rating (filter media)

A03	Inorganic microfiber 3 µm	**M25**	Wire mesh 25 µm
A06	Inorganic microfiber 6 µm	**M60**	Wire mesh 60 µm
A10	Inorganic microfiber 10 µm	**M90**	Wire mesh 90 µm
A16	Inorganic microfiber 16 µm	**P10**	Resin impregnated paper 10 µm
A25	Inorganic microfiber 25 µm	**P25**	Resin impregnated paper 25 µm

		Filter media		
Element Δp		Axx	Mxx	Pxx
N	10 bar		•	•
H	10 bar	•		
W	10 bar, compatible with fluids HFA, HFB and HFC	•	•	

Seals
B NBR
V FPM

Bypass valve
E 3 bar
1.75 bar

Execution
P01 MP Filtri standard
Pxx Customized

ACCESSORIES

Indicators		page
BVA	Axial pressure gauge	240
BVR	Radial pressure gauge	240
BVP	Visual pressure indicator with automatic reset	241
BVQ	Visual pressure indicator with manual reset	241

Additional features		page
TE	Extension tube	248
T5	Filler plug M30x1.5	249

		page
BEA	Electrical pressure indicator	239
BEM	Electrical pressure indicator	239
BLA	Electrical / visual pressure indicator	239-240

MPF020

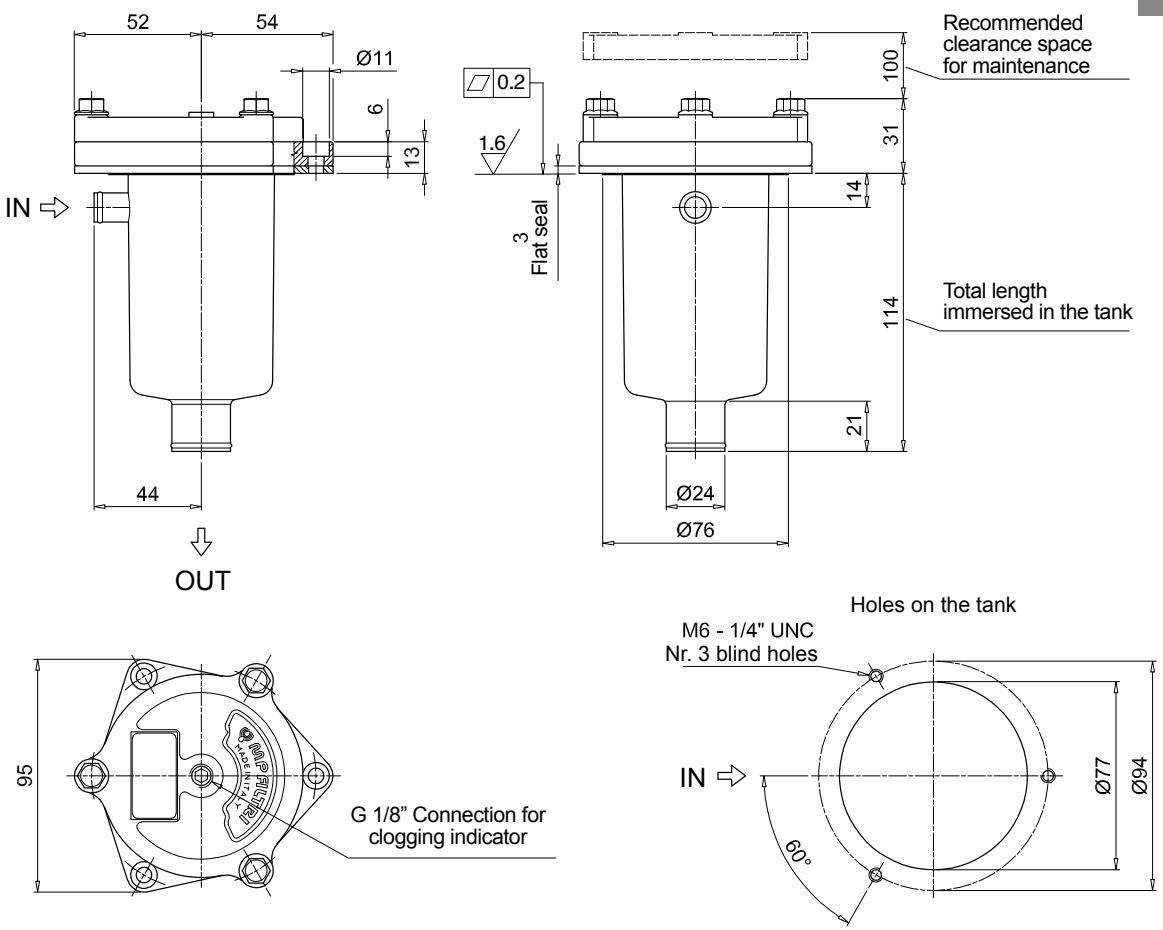

MPF030

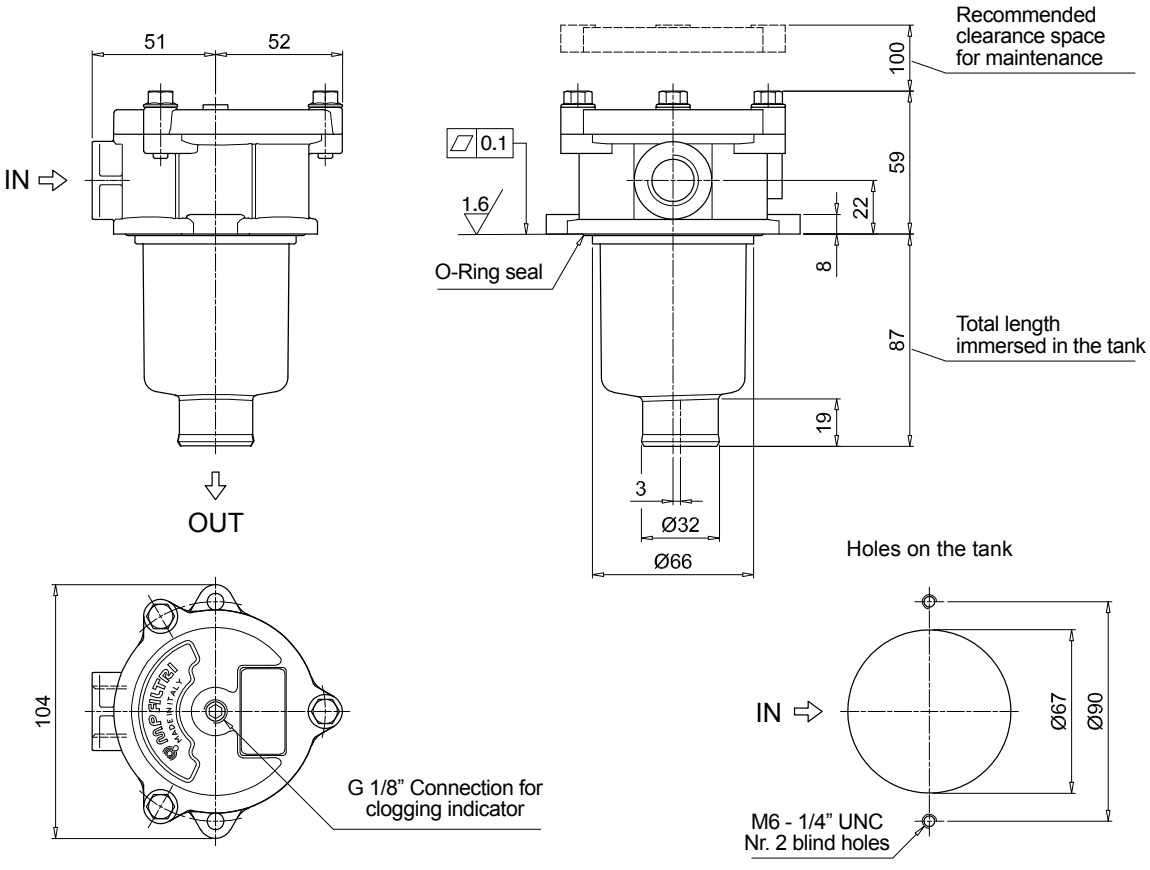

Designation & Ordering code

COMPLETE FILTER

Configuration example 1:	MPF100	2	W	G3	A06	W	B	P01
Configuration example 2:	MPF104	4	A	G8	P10	N	E	P01

Series and size

MPF100 | **MPF104** Filter element with standard spigot

Length

1 | **2** | **3** | **4** |

Seals and treatments

A	NBR
V	FPM
W	NBR head anodized
Z	FPM head anodized

Connections	Size 100	Size 104
G1 G 1/2”	•	•
G2 G 3/4”	•	•
G3 G 1”	•	•
G4 1/2” NPT	•	•
G5 3/4” NPT	•	•
G6 1” NPT	•	•

Connections	Size 100	Size 104
G7 SAE 8 - 3/4” - 16 UNF	•	•
G8 SAE 12 - 1 1/16” - 12 UN	•	•
G9 SAE 16 - 1 5/16” - 12 UN	•	•

Filtration rating (filter media)

A03	Inorganic microfiber 3 µm	**M25**	Wire mesh 25 µm
A06	Inorganic microfiber 6 µm	**M60**	Wire mesh 60 µm
A10	Inorganic microfiber 10 µm	**M90**	Wire mesh 90 µm
A16	Inorganic microfiber 16 µm	**P10**	Resin impregnated paper 10 µm
A25	Inorganic microfiber 25 µm	**P25**	Resin impregnated paper 25 µm

Element Δp	Filter media Axx	Mxx	Pxx
N 10 bar		•	•
H 10 bar	•		
W 10 bar, compatible with fluids HFA, HFB and HFC	•	•	

Bypass valve

E	3 bar
B	1.75 bar

Execution

P01	MP Filtri standard
Pxx	Customized

FILTER ELEMENT

Configuration example 1:	MF100	2	A06	W	B		P01
Configuration example 2:	MF100	4	P10	N	B	E	P01

Element series and size

MF100 Filter element with standard spigot

Element length

1 | **2** | **3** | **4** |

Filtration rating (filter media)

A03	Inorganic microfiber 3 µm	**M25**	Wire mesh 25 µm
A06	Inorganic microfiber 6 µm	**M60**	Wire mesh 60 µm
A10	Inorganic microfiber 10 µm	**M90**	Wire mesh 90 µm
A16	Inorganic microfiber 16 µm	**P10**	Resin impregnated paper 10 µm
A25	Inorganic microfiber 25 µm	**P25**	Resin impregnated paper 25 µm

Element Δp	Filter media Axx	Mxx	Pxx
N 10 bar		•	•
H 10 bar	•		
W 10 bar, compatible with fluids HFA, HFB and HFC	•	•	

Seals

B	NBR
V	FPM

Bypass valve

E	3 bar
	1.75 bar

Execution

P01	MP Filtri standard
Pxx	Customized

ACCESSORIES

Indicators	page
BVA Axial pressure gauge	240
BVR Radial pressure gauge	240
BVP Visual pressure indicator with automatic reset	241
BVQ Visual pressure indicator with manual reset	241
BEA Electrical pressure indicator	239
BEM Electrical pressure indicator	239
BLA Electrical / visual pressure indicator	239-240

Additional features	page
TE Extension tube	248
DFS Diffuser with fast lock connection	249
T5 Filler plug M30x1.5	249
DPT Dipstick	249

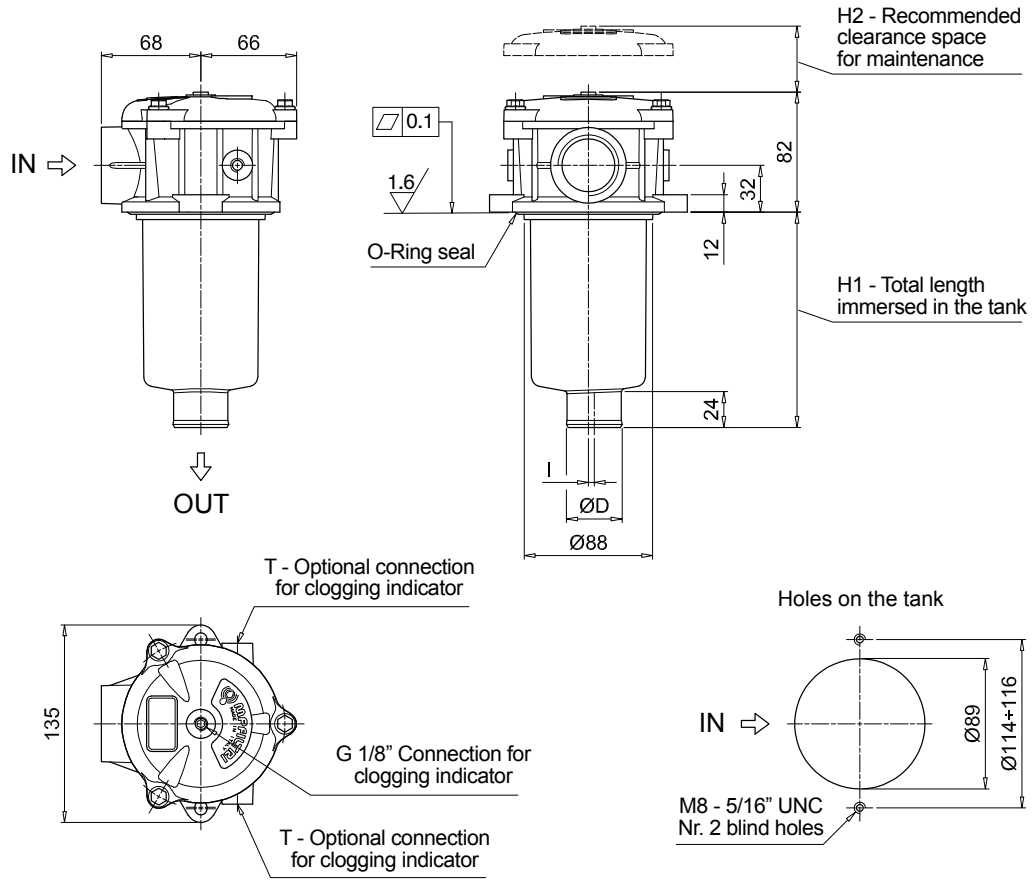

MPF100

Filter length	H1 [mm]	H2 [mm]	D [mm]	l [mm]
1	100	120	38	4
2	147	170	38	4
3	225	250	47	-
4	327	350	47	2.5

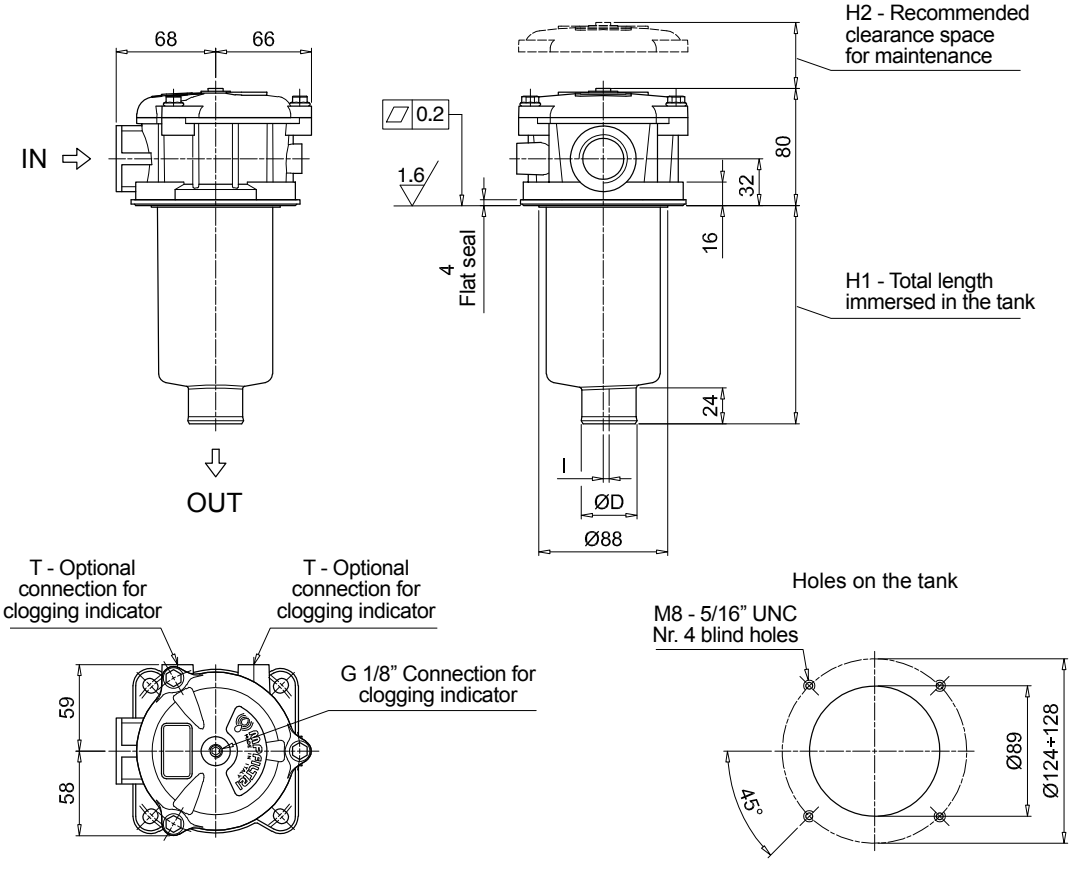

MPF104

Filter length	H1 [mm]	H2 [mm]	D [mm]	l [mm]
1	98	120	38	4
2	145	170	38	4
3	223	250	47	-
4	325	350	47	2.5

MPF MPF110

Designation & Ordering code

COMPLETE FILTER

Configuration example 1:	MPF110	2	A	G2	1	A16	H	E	P01
Configuration example 2:	MPF110	4	V	G12	1	M60	N	B	P01

Series and size

MPF110 Filter element with standard spigot

Length

1 | **2** | **3** | **4**

Seals and treatments

A	NBR	**W**	NBR head anodized
V	FPM	**Z**	FPM head anodized

Main Connections		Aux size 1	Aux size 2
G1	G 1/2"	G 3/8"	G 1/2"
G2	G 3/4"		
G3	G 1"		
G4	1/2" NPT	3/8" NPT	1/2" NPT
G5	3/4" NPT		
G6	1" NPT		
G7	SAE 8 - 3/4" - 16 UNF	SAE 6 - 9/16"- 18 UNF	SAE 8 - 3/4"- 16 UNF
G8	SAE 12 - 1 1/16" - 12 UN		
G9	SAE 16 - 1 5/16" - 12 UN		
G10	G 1 1/4"	G 3/8"	G 1/2"
G11	1 1/4" NPT	3/8" NPT	1/2" NPT
G12	SAE 20 - 1 5/8" - 12 UN	SAE 6 - 9/16"- 18 UNF	SAE 8 - 3/4"- 16 UNF

Aux connection - see previous table

1	Aux size 1	**2**	Aux size 2

Filtration rating (filter media)

A03	Inorganic microfiber 3 µm	**M25**	Wire mesh 25 µm
A06	Inorganic microfiber 6 µm	**M60**	Wire mesh 60 µm
A10	Inorganic microfiber 10 µm	**M90**	Wire mesh 90 µm
A16	Inorganic microfiber 16 µm	**P10**	Resin impregnated paper 10 µm
A25	Inorganic microfiber 25 µm	**P25**	Resin impregnated paper 25 µm

Element Δp		Filter media Axx	Mxx	Pxx
N	10 bar		•	•
H	10 bar	•		
W	10 bar, compatible with fluids HFA, HFB and HFC	•	•	

Bypass valve

E	3 bar
B	1.75 bar

Execution

P01	MP Filtri standard
Pxx	Customized

FILTER ELEMENT

Configuration example 1:	MF100	2	A16	H	B	E	P01
Configuration example 2:	MF100	4	M60	N	V		P01

Element series and size

MF100 Filter element with standard spigot

Element length

1 | **2** | **3** | **4**

Filtration rating (filter media)

A03	Inorganic microfiber 3 µm	**M25**	Wire mesh 25 µm
A06	Inorganic microfiber 6 µm	**M60**	Wire mesh 60 µm
A10	Inorganic microfiber 10 µm	**M90**	Wire mesh 90 µm
A16	Inorganic microfiber 16 µm	**P10**	Resin impregnated paper 10 µm
A25	Inorganic microfiber 25 µm	**P25**	Resin impregnated paper 25 µm

Element Δp		Filter media Axx	Mxx	Pxx
N	10 bar		•	•
H	10 bar	•		
W	10 bar, compatible with fluids HFA, HFB and HFC	•	•	

Seals

B	NBR
V	FPM

Bypass valve

E	3 bar
	1.75 bar

Execution

P01	MP Filtri standard
Pxx	Customized

ACCESSORIES

Indicators		page
BVA	Axial pressure gauge	240
BVR	Radial pressure gauge	240
BVP	Visual pressure indicator with automatic reset	241
BVQ	Visual pressure indicator with manual reset	241
BEA	Electrical pressure indicator	239
BEM	Electrical pressure indicator	239
BLA	Electrical / visual pressure indicator	239-240

Additional features		page
TE	Extension tube	248
DFS	Diffuser with fast lock connection	249
T5	Filler plug M30x1.5	249
DPT	Dipstick	249

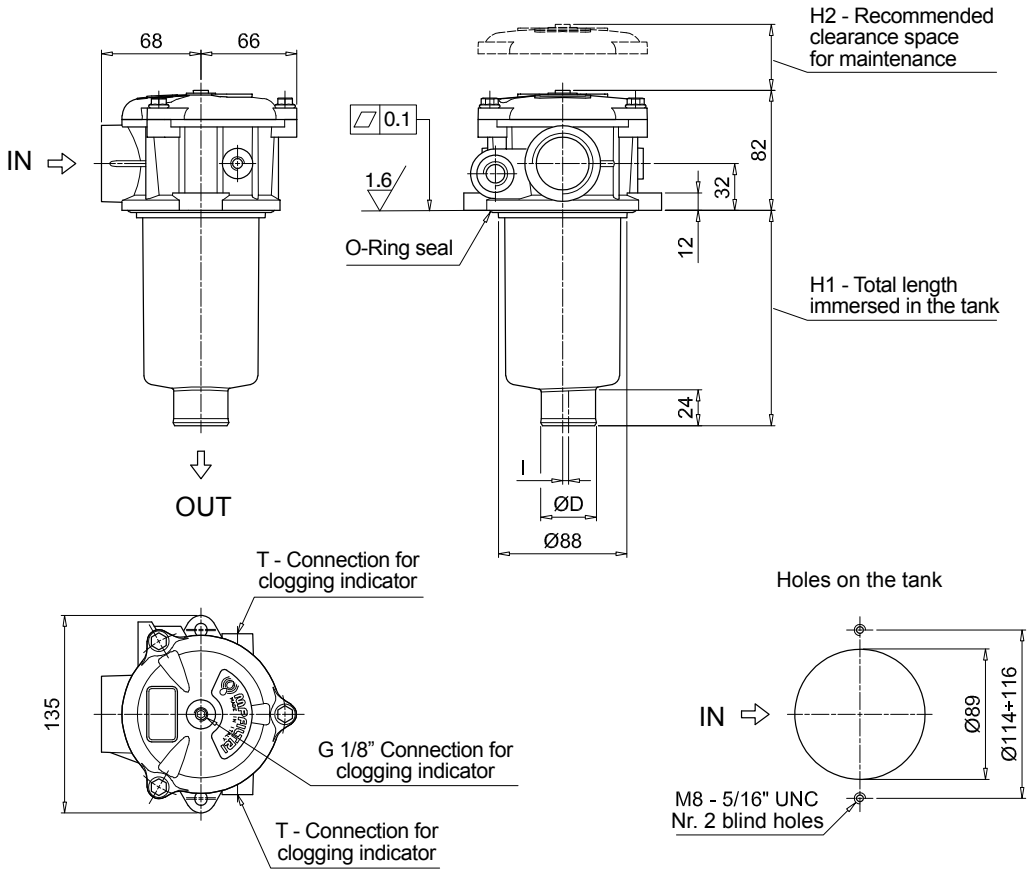

MPF110

Filter length	H1 [mm]	H2 [mm]	D [mm]	l [mm]
1	100	120	38	4
2	147	170	38	4
3	225	250	47	-
4	327	350	47	2.5

Connections	T
G1-G2-G3	G 1/8"
G4-G5-G6-G7-G8-G9	1/8" NPT
G10	G 1/8"
G11-G12	1/8" NPT

Designation & Ordering code

COMPLETE FILTER

Configuration example 1: MPF181 | 1 | A | G1 | A25 | H | E | P01
Configuration example 2: MPF191 | 2 | V | G2 | P10 | N | B | P01

Series and size

MPF181 | **MPF191** Filter element with standard spigot

Length	Size 181	Size 191
1	•	
2	•	•

Seals and treatments

A	NBR		**B**	NBR	flat seal on head
V	FPM		**D**	FPM	flat seal on head
W	NBR	head anodized	**L**	NBR	head anodized, flat seal on head
Z	FPM	head anodized	**M**	FPM	head anodized, flat seal on head

Connections

G1	G 1 1/4”	**G5**	1 1/2” NPT
G2	G 1 1/2”	**G7**	SAE 20 - 1 5/8” - 12 UN
G4	1 1/4” NPT	**G8**	SAE 24 - 1 7/8” - 12 UN

Filtration rating (filter media)

A03	Inorganic microfiber 3 µm	**M25**	Wire mesh 25 µm
A06	Inorganic microfiber 6 µm	**M60**	Wire mesh 60 µm
A10	Inorganic microfiber 10 µm	**M90**	Wire mesh 90 µm
A16	Inorganic microfiber 16 µm	**P10**	Resin impregnated paper 10 µm
A25	Inorganic microfiber 25 µm	**P25**	Resin impregnated paper 25 µm

		Filter media		
Element Δp		Axx	Mxx	Pxx
N	10 bar		•	•
H	10 bar	•		
W	10 bar, compatible with fluids HFA, HFB and HFC	•	•	

Bypass valve

E	3 bar
B	1.75 bar

Execution

P01	MP Filtri standard
Pxx	Customized

FILTER ELEMENT

Configuration example 1: MF180 | 1 | A25 | H | B | E | P01
Configuration example 2: MF190 | 2 | P10 | N | V | | P01

Element series and size

MF180 | **MF190** Filter element with standard spigot

Element length	Size 180	Size 190
1	•	
2	•	•

Filtration rating (filter media)

A03	Inorganic microfiber 3 µm	**M25**	Wire mesh 25 µm
A06	Inorganic microfiber 6 µm	**M60**	Wire mesh 60 µm
A10	Inorganic microfiber 10 µm	**M90**	Wire mesh 90 µm
A16	Inorganic microfiber 16 µm	**P10**	Resin impregnated paper 10 µm
A25	Inorganic microfiber 25 µm	**P25**	Resin impregnated paper 25 µm

		Filter media		
Element Δp		Axx	Mxx	Pxx
N	10 bar		•	•
H	10 bar	•		
W	10 bar, compatible with fluids HFA, HFB and HFC	•	•	

Seals

B	NBR
V	FPM

Bypass valve

E	3 bar
	1.75 bar

Execution

P01	MP Filtri standard
Pxx	Customized

ACCESSORIES

Indicators		page
BVA	Axial pressure gauge	240
BVR	Radial pressure gauge	240
BVP	Visual pressure indicator with automatic reset	241
BVQ	Visual pressure indicator with manual reset	241

Additional features		page
TE	Extension tube	248
Sxx	Extension tube	248
T5	Filler plug M30x1.5	249

		page
BEA	Electrical pressure indicator	239
BEM	Electrical pressure indicator	239
BLA	Electrical / visual pressure indicator	239-240

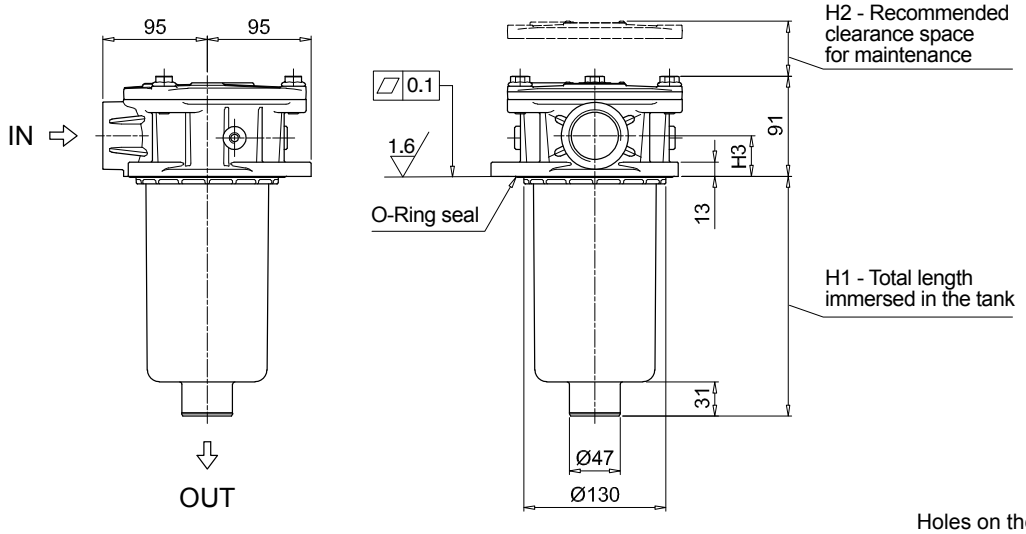

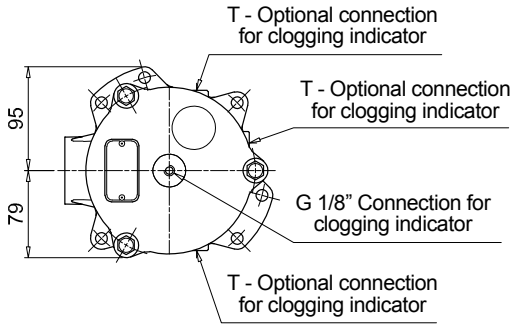

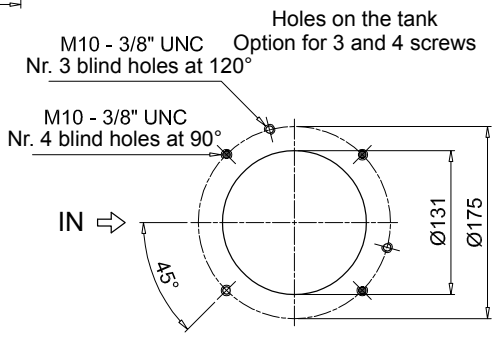

MPF181

Filter length	H1 [mm]	H2 [mm]
1	235	255
2	448	475

Connections	H3 [mm]
G1 - G4 - G7	35
G2 - G5 - G8	37

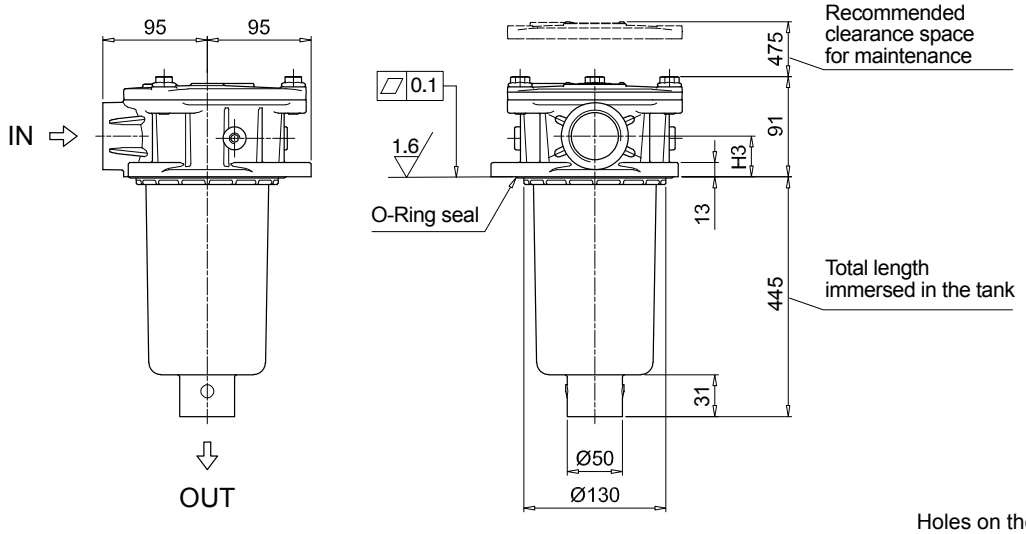

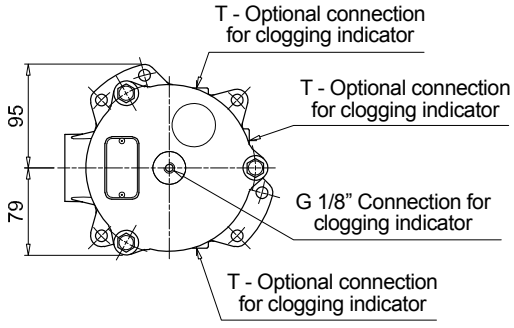

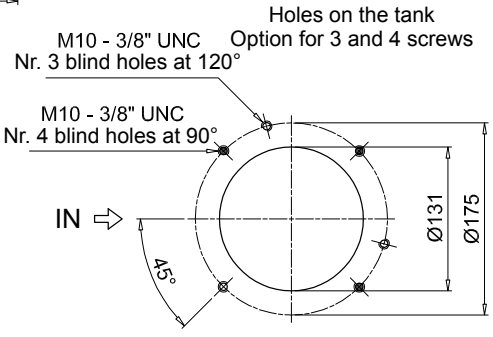

MPF191

Connections	H3 [mm]
G1 - G4 - G7	35
G2 - G5 - G8	37

Designation & Ordering code

COMPLETE FILTER

Configuration example 1:	MPF182	1	A	G1	1	A25	H	E	P01
Configuration example 2:	MPF192	2	V	G4	2	P10	N	B	P01

Series and size

MPF182	**MPF192**	Filter element with standard spigot

Length

	Size 182	Size 192
1	•	
2	•	•

Seals and treatments

A	NBR		**B**	NBR	flat seal on head
V	FPM		**D**	FPM	flat seal on head
W	NBR	head anodized	**L**	NBR	head anodized, flat seal on head
Z	FPM	head anodized	**M**	FPM	head anodized, flat seal on head

Main Connections		Aux size 1	Aux size 2
G1	G 1 1/4"	G 1/2"	G 3/4"
G4	1 1/4" NPT	1/2" NPT	3/4" NPT
G7	SAE 20 - 1 5/8" - 12 UN	SAE 8 - 3/16"- 16 UNF	SAE 12 - 1 1/16"- 12 UN

Aux connection - see previous table

1	Aux size 1	**2**	Aux size 2

Filtration rating (filter media)

A03	Inorganic microfiber 3 µm	**M25**	Wire mesh 25 µm
A06	Inorganic microfiber 6 µm	**M60**	Wire mesh 60 µm
A10	Inorganic microfiber 10 µm	**M90**	Wire mesh 90 µm
A16	Inorganic microfiber 16 µm	**P10**	Resin impregnated paper 10 µm
A25	Inorganic microfiber 25 µm	**P25**	Resin impregnated paper 25 µm

Element Δp		Filter media Axx	Mxx	Pxx
N	10 bar		•	•
H	10 bar	•		
W	10 bar, compatible with fluids HFA, HFB and HFC	•	•	

Bypass valve	
E	3 bar
B	1.75 bar

Execution	
P01	MP Filtri standard
Pxx	Customized

FILTER ELEMENT

Configuration example 1:	MF180	1	A25	H	B	E	P01
Configuration example 2:	MF190	2	P10	N	V		P01

Element series and size

MF180	**MF190**	Filter element with standard spigot

Element length

	Size 180	Size 190
1	•	
2	•	•

Filtration rating (filter media)

A03	Inorganic microfiber 3 µm	**M25**	Wire mesh 25 µm
A06	Inorganic microfiber 6 µm	**M60**	Wire mesh 60 µm
A10	Inorganic microfiber 10 µm	**M90**	Wire mesh 90 µm
A16	Inorganic microfiber 16 µm	**P10**	Resin impregnated paper 10 µm
A25	Inorganic microfiber 25 µm	**P25**	Resin impregnated paper 25 µm

Element Δp		Filter media Axx	Mxx	Pxx
N	10 bar		•	•
H	10 bar	•		
W	10 bar, compatible with fluids HFA, HFB and HFC	•	•	

Seals	
B	NBR
V	FPM

Bypass valve	
E	3 bar
	1.75 bar

Execution	
P01	MP Filtri standard
Pxx	Customized

ACCESSORIES

Indicators		page
BVA	Axial pressure gauge	240
BVR	Radial pressure gauge	240
BVP	Visual pressure indicator with automatic reset	241
BVQ	Visual pressure indicator with manual reset	241

		page
BEA	Electrical pressure indicator	239
BEM	Electrical pressure indicator	239
BLA	Electrical / visual pressure indicator	239-240

Additional features		page
TE	Extension tube	248
Sxx	Extension tube	248
T5	Filler plug M30x1.5	249

MPF182

Filter length	H1 [mm]	H2 [mm]
1	235	255
2	448	475

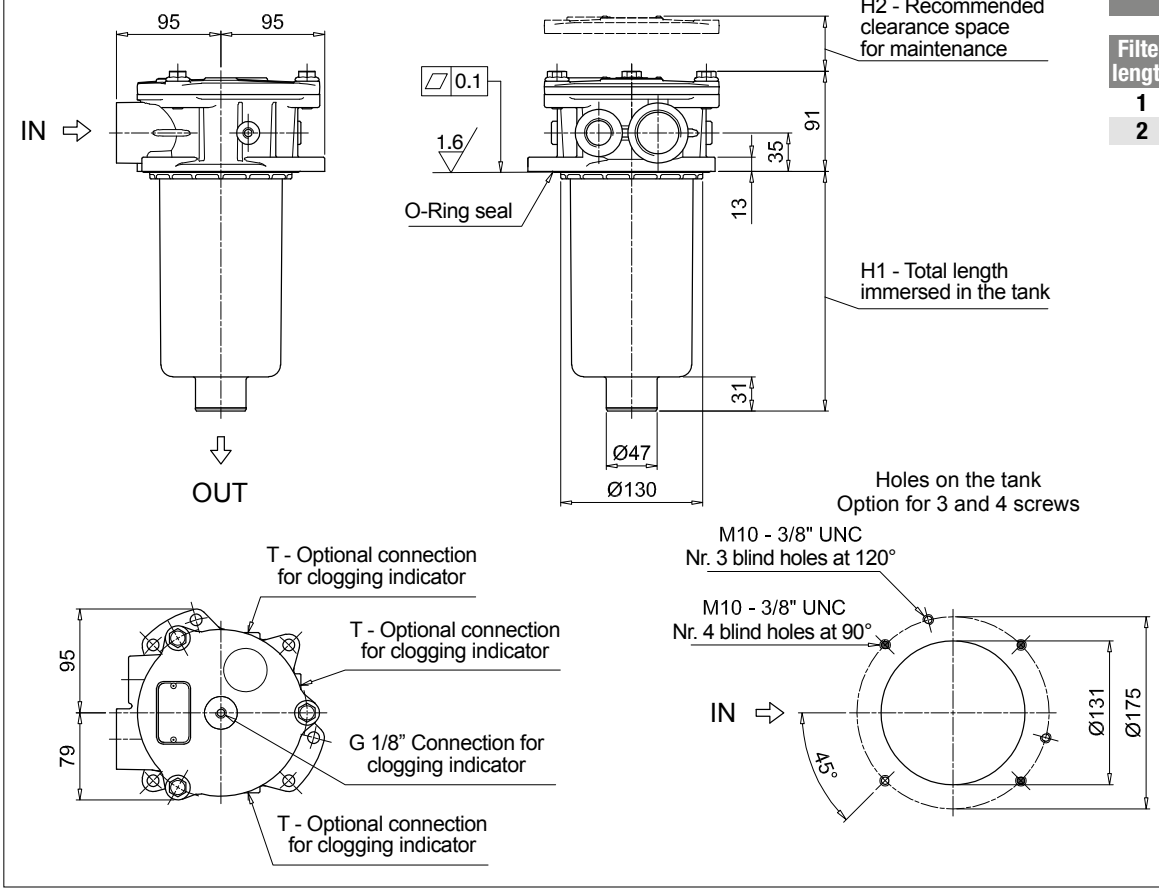

MPF192

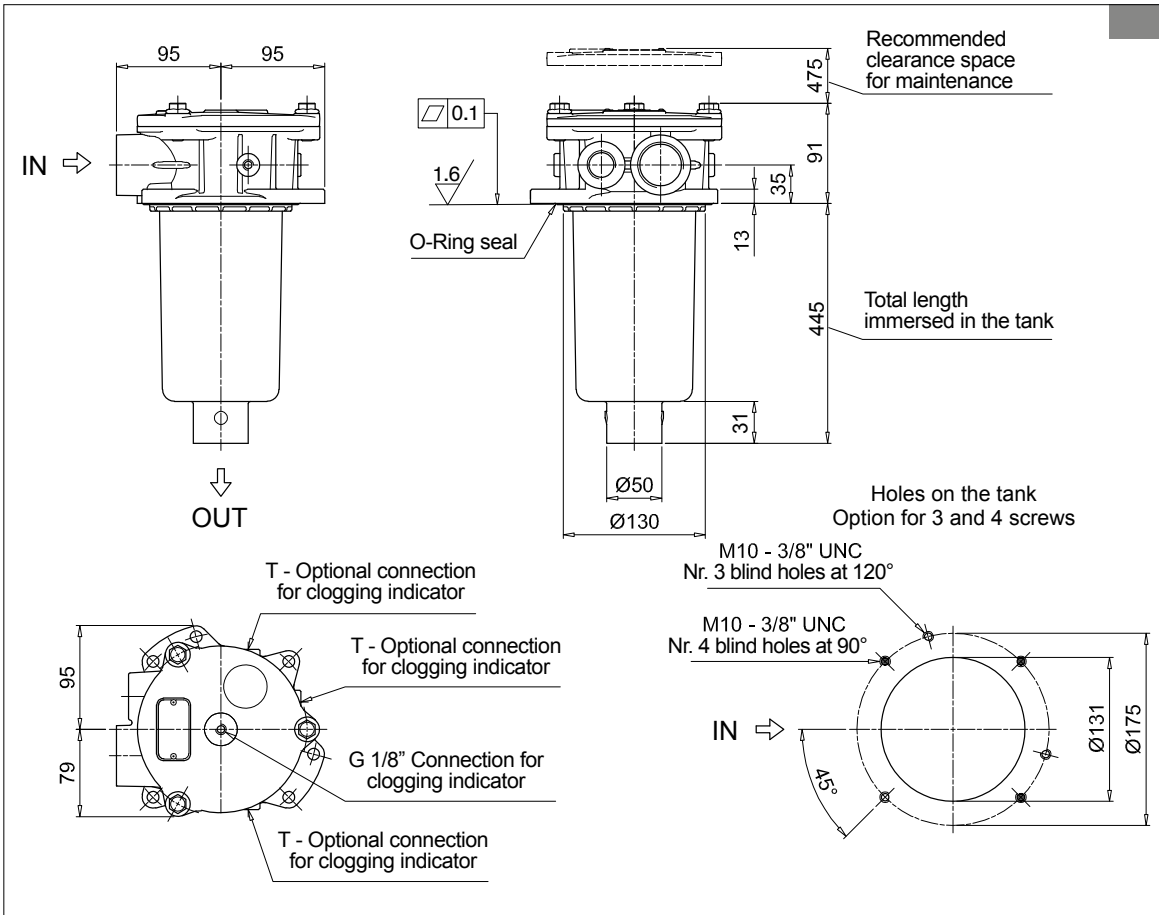

Designation & Ordering code

COMPLETE FILTER

Configuration example 1: MPF184 | 1 | A | G1 | A25 | H | E | P01
Configuration example 2: MPF194 | 2 | V | F3 | P10 | N | B | P01

Series and size
MPF184 | **MPF194** Filter element with standard spigot

Length	Size 184	Size 194
1	•	
2	•	•

Seals and treatments

A	NBR	**W**	NBR head anodized
V	FPM	**Z**	FPM head anodized

Main Connections		Rear connections
G1	G 1 1/4"	-
G2	G 1 1/4"	G 1 1/4"
G4	1 1/4" NPT	-
G5	1 1/4" NPT	1 1/4" NPT
G7	SAE 20 - 1 5/8" - 12 UN	-
G8	SAE 20 - 1 5/8" - 12 UN	SAE 20 - 1 5/8" - 12 UN
G10	SAE 24 - 1 7/8" - 12 UN	-
G11	SAE 24 - 1 7/8" - 12 UN	SAE 20 - 1 5/8" - 12 UN

Main Connections		Rear connections
G13	G 1 1/2"	-
G14	G 1 1/2"	G 1 1/4"
G15	1 1/2" NPT	-
G16	1 1/2" NPT	1 1/4" NPT
F1	1 1/2" SAE 3000 psi/M	-
F2	1 1/2" SAE 3000 psi/UNC	-
F3	1 1/2" SAE 3000 psi/M	1 1/2" SAE 3000 psi/M
F4	1 1/2" SAE 3000 psi/UNC	1 1/2" SAE 3000 psi/UNC

Filtration rating (filter media)

A03	Inorganic microfiber 3 µm	**M25**	Wire mesh 25 µm
A06	Inorganic microfiber 6 µm	**M60**	Wire mesh 60 µm
A10	Inorganic microfiber 10 µm	**M90**	Wire mesh 90 µm
A16	Inorganic microfiber 16 µm	**P10**	Resin impregnated paper 10 µm
A25	Inorganic microfiber 25 µm	**P25**	Resin impregnated paper 25 µm

	Element Δp	Filter media Axx	Mxx	Pxx
N	10 bar		•	•
H	10 bar	•		
W	10 bar, compatible with fluids HFA, HFB and HFC	•	•	

Bypass valve		Execution	
E	3 bar	**P01**	MP Filtri standard
B	1.75 bar	**Pxx**	Customized

FILTER ELEMENT

Configuration example 1: MF180 | 1 | A25 | H | B | E | P01
Configuration example 2: MF190 | 2 | P10 | N | V | | P01

Element series and size
MF180 | **MF190** Filter element with standard spigot

Element length	Size 180	Size 190
1	•	
2	•	•

Filtration rating (filter media)

A03	Inorganic microfiber 3 µm	**M25**	Wire mesh 25 µm
A06	Inorganic microfiber 6 µm	**M60**	Wire mesh 60 µm
A10	Inorganic microfiber 10 µm	**M90**	Wire mesh 90 µm
A16	Inorganic microfiber 16 µm	**P10**	Resin impregnated paper 10 µm
A25	Inorganic microfiber 25 µm	**P25**	Resin impregnated paper 25 µm

	Element Δp	Filter media Axx	Mxx	Pxx
N	10 bar		•	•
H	10 bar	•		
W	10 bar, compatible with fluids HFA, HFB and HFC	•	•	

Seals		Bypass valve		Execution	
B	NBR	**E**	3 bar	**P01**	MP Filtri standard
V	FPM		1.75 bar	**Pxx**	Customized

ACCESSORIES

Indicators		page
BVA	Axial pressure gauge	240
BVR	Radial pressure gauge	240
BVP	Visual pressure indicator with automatic reset	241
BVQ	Visual pressure indicator with manual reset	241

		page
BEA	Electrical pressure indicator	239
BEM	Electrical pressure indicator	239
BLA	Electrical / visual pressure indicator	239-240

Additional features		page
TE	Extension tube	248
Sxx	Extension tube	248
T5	Filler plug M30x1.5	249

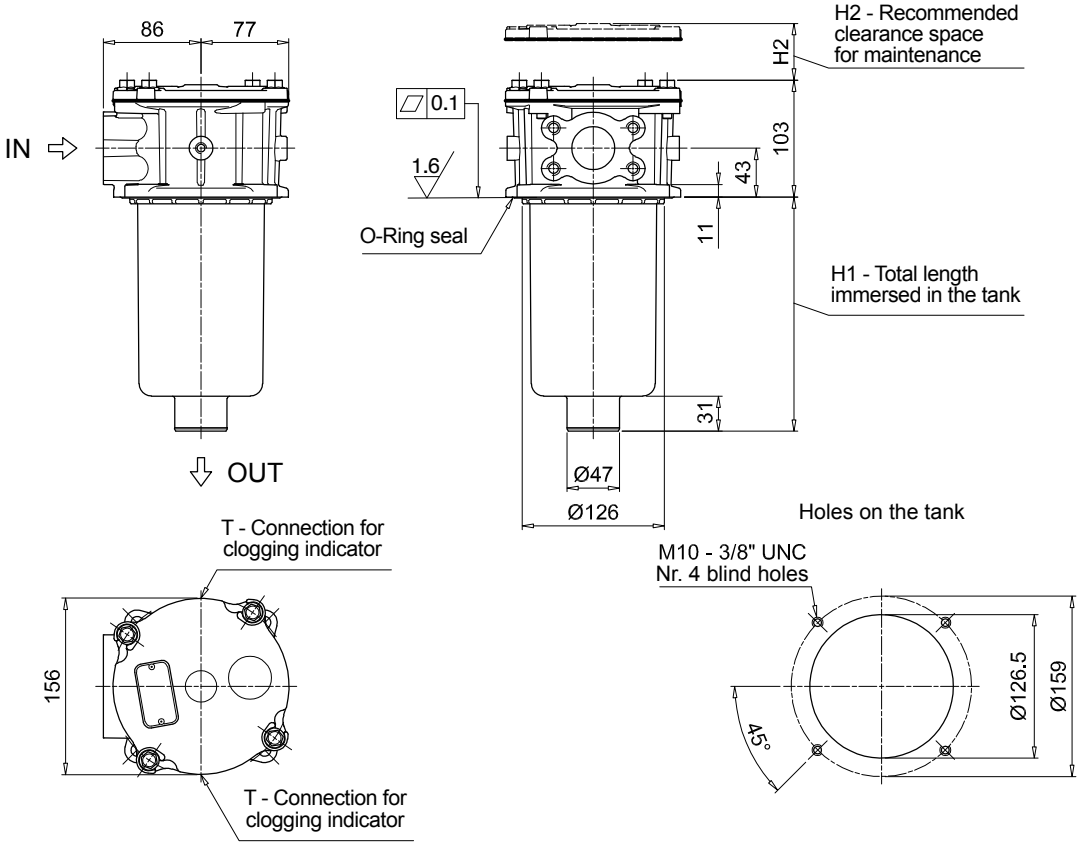

MPF184

1 connection port

Filter length	H1 [mm]	H2 [mm]
1	232	260
2	445	480

Connections	T
G1	G 1/8"
G4 - G7 - G10	1/8" NPT
G13	G 1/8"
G15 - F1 - F2	1/8" NPT

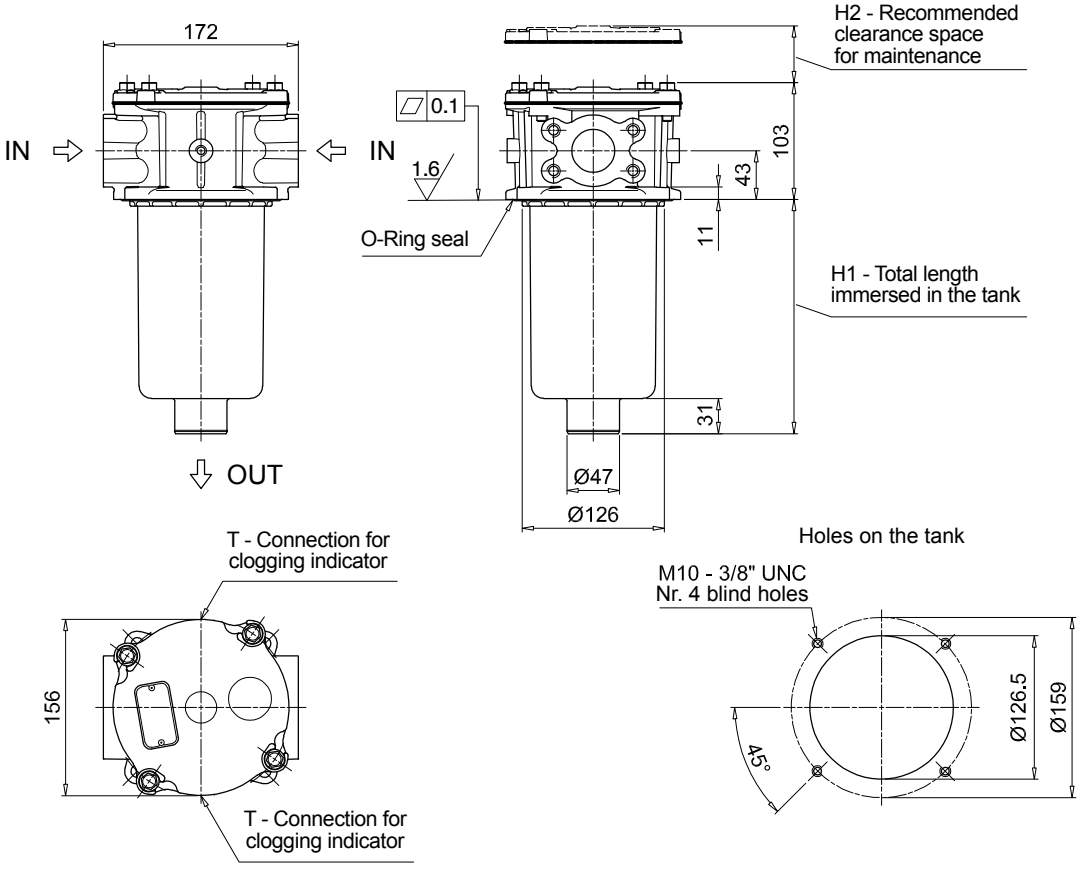

MPF184

2 connection ports

Filter length	H1 [mm]	H2 [mm]
1	232	260
2	445	480

Connections	T
G2	G 1/8"
G5 - G8 - G11	1/8" NPT
G14	G 1/8"
G16 - F3 - F4	1/8" NPT

Dimensions

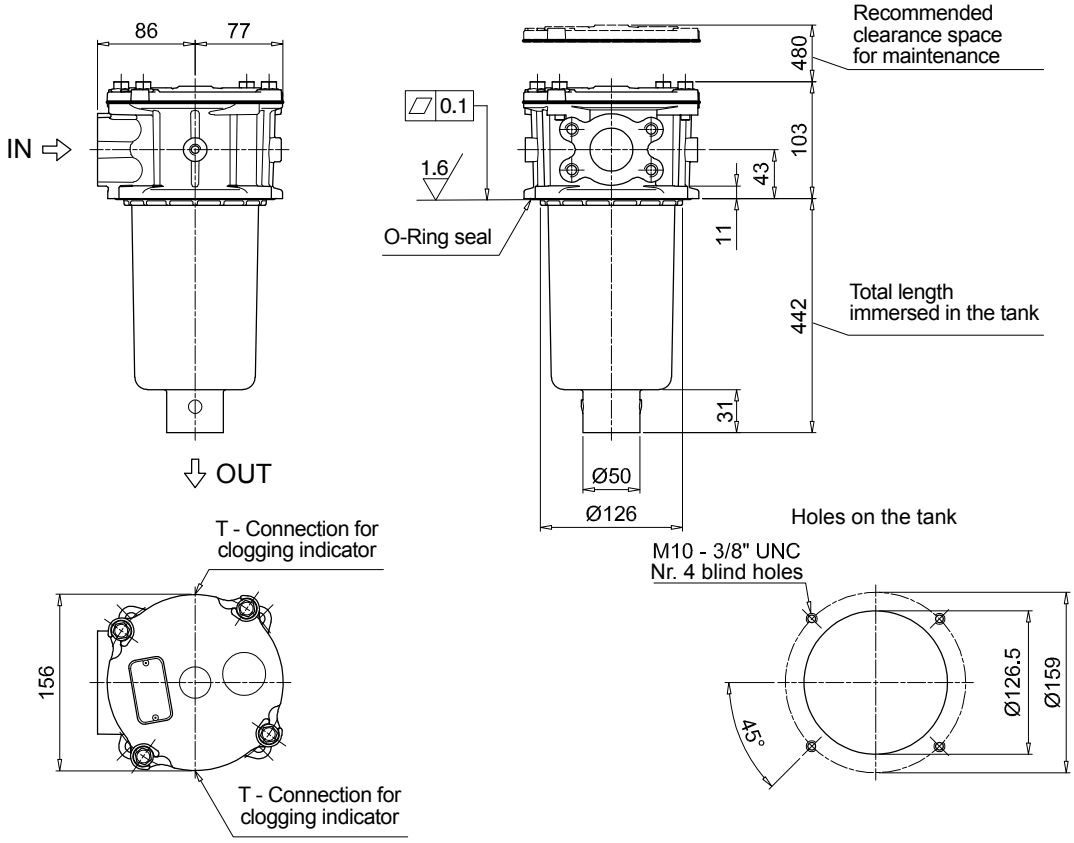

MPF194	
1 connection port	
Connections	**T**
G1	G 1/8"
G4 - G7 - G10	1/8" NPT
G13	G 1/8"
G15 - F1 - F2	1/8" NPT

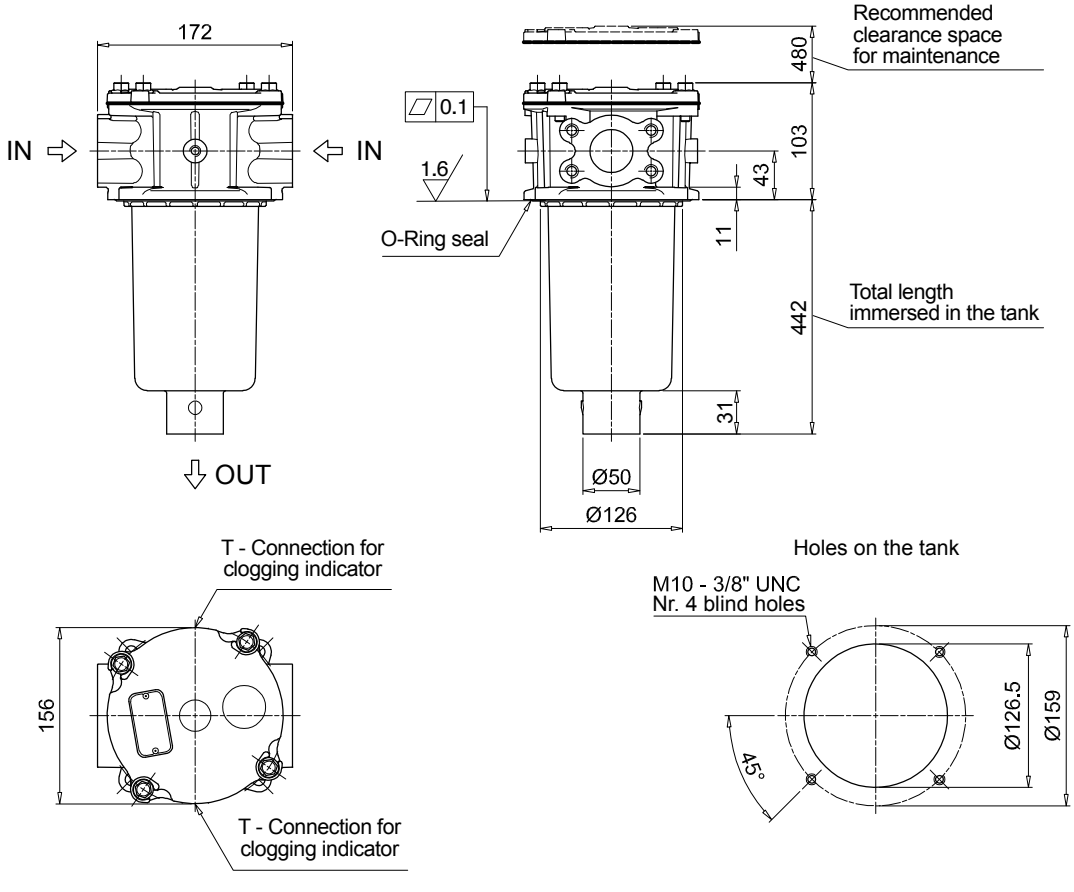

MPF194	
2 connection ports	
Connections	**T**
G2	G 1/8"
G5 - G8 - G11	1/8" NPT
G14	G 1/8"
G16 - F3 - F4	1/8" NPT

Designation & Ordering code

COMPLETE FILTER

Configuration example 1:	MPF400	1	A	G9	A25	H	B	P01
Configuration example 2:	MPF400	2	V	G4	P10	N	E	P01

Series and size

MPF400 Filter element with standard spigot

Length

1 | **2** | **3**

Seals and treatments

A	NBR
V	FPM
W	NBR head anodized
Z	FPM head anodized

Connections

G1	G 1 1/4”	**G6**	2” NPT
G2	G 1 1/2”	**G7**	SAE 20 - 1 5/8” - 12 UN
G3	G 2”	**G8**	SAE 24 - 1 7/8” - 12 UN
G4	1 1/4” NPT	**G9**	SAE 32 - 2 1/2” - 12 UN
G5	1 1/2” NPT		

Filtration rating (filter media)

A03	Inorganic microfiber 3 µm	**M25**	Wire mesh 25 µm
A06	Inorganic microfiber 6 µm	**M60**	Wire mesh 60 µm
A10	Inorganic microfiber 10 µm	**M90**	Wire mesh 90 µm
A16	Inorganic microfiber 16 µm	**P10**	Resin impregnated paper 10 µm
A25	Inorganic microfiber 25 µm	**P25**	Resin impregnated paper 25 µm

Element Δp	Filter media Axx	Mxx	Pxx
N 10 bar		•	•
H 10 bar	•		
W 10 bar, compatible with fluids HFA, HFB and HFC	•	•	

Bypass valve

E	3 bar
B	1.75 bar

Execution

P01	MP Filtri standard
Pxx	Customized

FILTER ELEMENT

Configuration example 1:	MF400	1	A25	H	B		P01
Configuration example 2:	MF400	2	P10	N	V	E	P01

Element series and size

MF400 Filter element with standard spigot

Element length

1 | **2** | **3**

Filtration rating (filter media)

A03	Inorganic microfiber 3 µm	**M25**	Wire mesh 25 µm
A06	Inorganic microfiber 6 µm	**M60**	Wire mesh 60 µm
A10	Inorganic microfiber 10 µm	**M90**	Wire mesh 90 µm
A16	Inorganic microfiber 16 µm	**P10**	Resin impregnated paper 10 µm
A25	Inorganic microfiber 25 µm	**P25**	Resin impregnated paper 25 µm

Element Δp	Filter media Axx	Mxx	Pxx
N 10 bar		•	•
H 10 bar	•		
W 10 bar, compatible with fluids HFA, HFB and HFC	•	•	

Seals

B	NBR
V	FPM

Bypass valve

E	3 bar
	1.75 bar

Execution

P01	MP Filtri standard
Pxx	Customized

ACCESSORIES

Indicators

		page
BVA	Axial pressure gauge	240
BVR	Radial pressure gauge	240
BVP	Visual pressure indicator with automatic reset	241
BVQ	Visual pressure indicator with manual reset	241
BEA	Electrical pressure indicator	239
BEM	Electrical pressure indicator	239
BLA	Electrical / visual pressure indicator	239-240

Additional features

		page
Sxx	Extension tube	248
T5	Filler plug M30x1.5	249

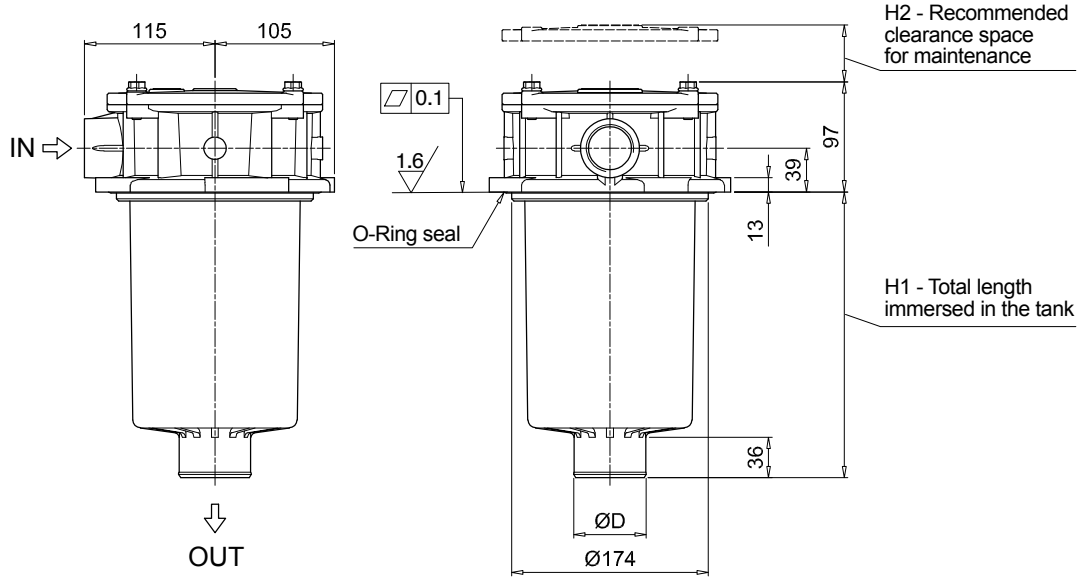

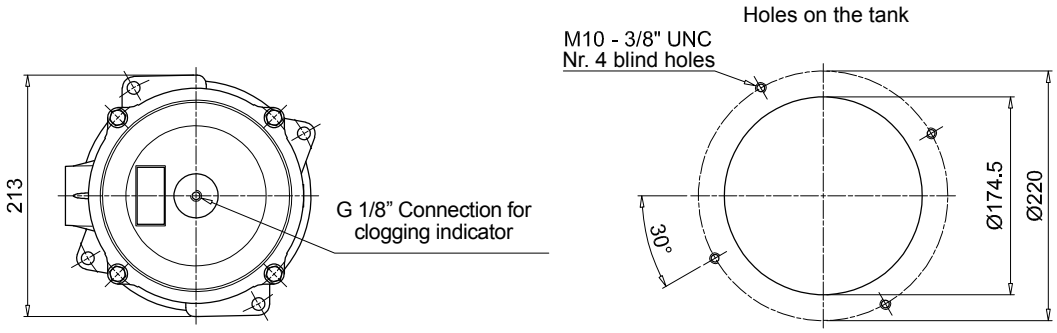

MPF400

Filter length	H1 [mm]	H2 [mm]	D [mm]
1	180	210	51
2	240	270	64
3	290	315	64

Designation & Ordering code

COMPLETE FILTER

Configuration example 1:	MPF410	1	A	G1	1	A25	H	B	P01
Configuration example 2:	MPF410	1	V	G4	1	P10	N	E	P01

Series and size

MPF410 Filter element with standard spigot

Length

1 | **2** | **3**

Seals and treatments

A	NBR
V	FPM
W	NBR head anodized
Z	FPM head anodized

Main Connections		Aux size 1
G1	G 1 1/4”	G 1”
G4	1 1/4” NPT	1” NPT
G7	SAE 20 - 1 5/8” - 12 UN	SAE 16 - 1 5/16”- 12 UN

Aux connection - see previous table

1 Aux size 1

Filtration rating (filter media)

A03	Inorganic microfiber 3 µm	**M25**	Wire mesh 25 µm
A06	Inorganic microfiber 6 µm	**M60**	Wire mesh 60 µm
A10	Inorganic microfiber 10 µm	**M90**	Wire mesh 90 µm
A16	Inorganic microfiber 16 µm	**P10**	Resin impregnated paper 10 µm
A25	Inorganic microfiber 25 µm	**P25**	Resin impregnated paper 25 µm

Element Δp		Filter media Axx	Mxx	Pxx
N	10 bar		•	•
H	10 bar	•		
W	10 bar, compatible with fluids HFA, HFB and HFC	•	•	

Bypass valve	
E	3 bar
B	1.75 bar

Execution	
P01	MP Filtri standard
Pxx	Customized

FILTER ELEMENT

Configuration example 1:	MF400	1	A25	H	B		P01
Configuration example 2:	MF400	1	P10	N	V	E	P01

Element series and size

MF400 Filter element with standard spigot

Element length

1 | **2** | **3**

Filtration rating (filter media)

A03	Inorganic microfiber 3 µm	**M25**	Wire mesh 25 µm
A06	Inorganic microfiber 6 µm	**M60**	Wire mesh 60 µm
A10	Inorganic microfiber 10 µm	**M90**	Wire mesh 90 µm
A16	Inorganic microfiber 16 µm	**P10**	Resin impregnated paper 10 µm
A25	Inorganic microfiber 25 µm	**P25**	Resin impregnated paper 25 µm

Element Δp		Filter media Axx	Mxx	Pxx
N	10 bar		•	•
H	10 bar	•		
W	10 bar, compatible with fluids HFA, HFB and HFC	•	•	

Seals	
B	NBR
V	FPM

Bypass valve	
E	3 bar
	1.75 bar

Execution	
P01	MP Filtri standard
Pxx	Customized

ACCESSORIES

Indicators		page
BVA	Axial pressure gauge	240
BVR	Radial pressure gauge	240
BVP	Visual pressure indicator with automatic reset	241
BVQ	Visual pressure indicator with manual reset	241

		page
BEA	Electrical pressure indicator	239
BEM	Electrical pressure indicator	239
BLA	Electrical / visual pressure indicator	239-240

Additional features		page
Sxx	Extension tube	248
T5	Filler plug M30x1.5	249

Dimensions

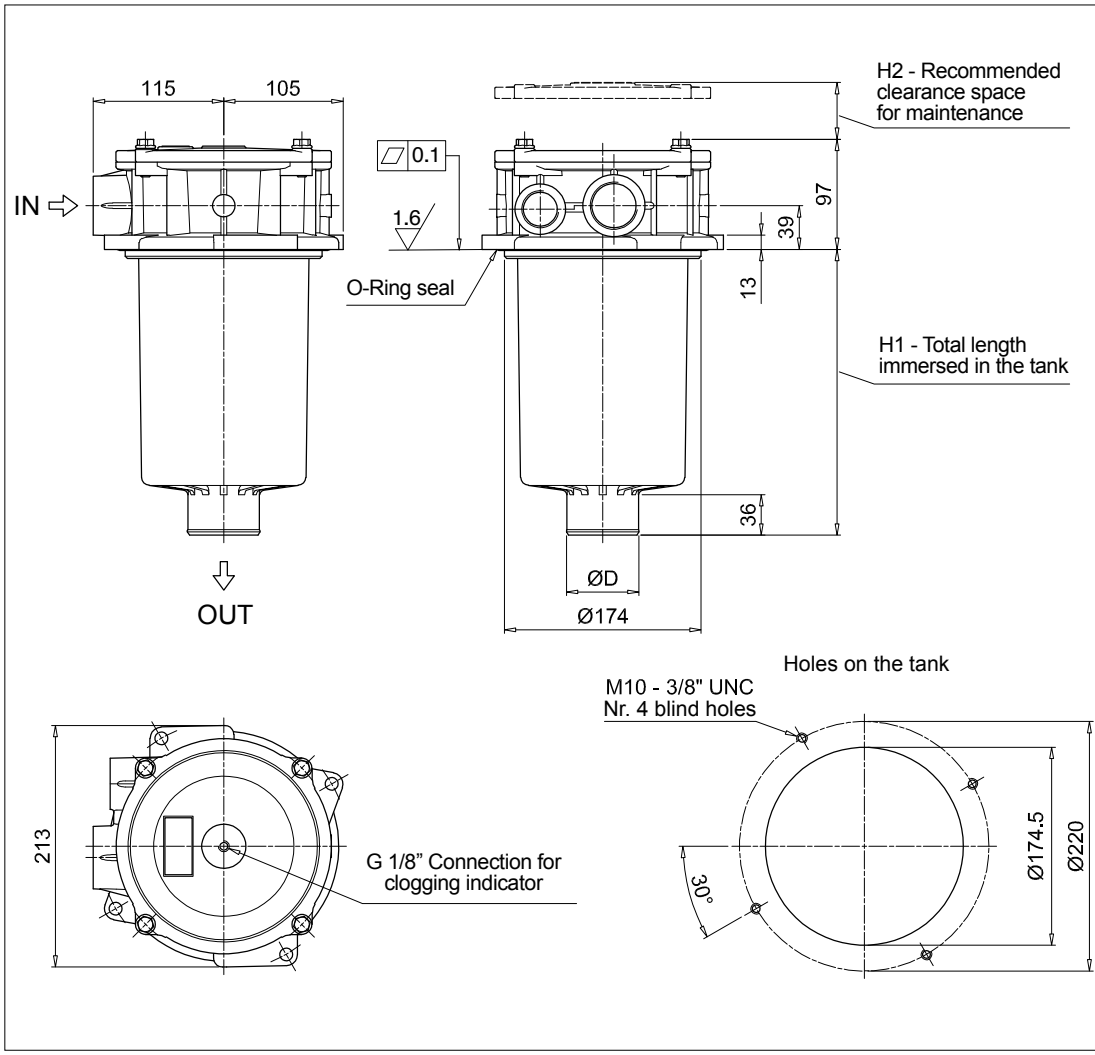

MPF410

Filter length	H1 [mm]	H2 [mm]	D [mm]
1	180	210	51
2	240	270	64
3	290	315	64

MPF MPF450 - MPF451 - MPF750

Designation & Ordering code

COMPLETE FILTER

Configuration example 1:	MPF450	1	A	G1	A25	H	B	P01
Configuration example 2:	MPF750	1	V	F2	P10	N	E	P01

Series and size

MPF450 | **MPF451** | **MPF750** Filter element with standard spigot

Length	MPF 450	MPF 451	MPF 750
1	•	•	•
2	•	•	
3	•	•	

Seals and treatments

A	NBR	**W**	NBR head anodized
V	FPM	**Z**	FPM head anodized

Connections	Aux (only size 451)
G1 G 2”	G 3/4”
G4 2” NPT	3/4” NPT
G7 SAE 32 - 2 1/2” - 12 UN	SAE 12 - 1 1/16” - 12 UN
F1 2” SAE 3000 psi/M	G 3/4”
F2 2” SAE 3000 psi/UN	3/4” NPT

Filtration rating (filter media)

A03	Inorganic microfiber 3 µm	**M25**	Wire mesh 25 µm
A06	Inorganic microfiber 6 µm	**M60**	Wire mesh 60 µm
A10	Inorganic microfiber 10 µm	**M90**	Wire mesh 90 µm
A16	Inorganic microfiber 16 µm	**P10**	Resin impregnated paper 10 µm
A25	Inorganic microfiber 25 µm	**P25**	Resin impregnated paper 25 µm

Element Δp	Filter media Axx	Mxx	Pxx
N 10 bar		•	•
H 10 bar	•		
W 10 bar, compatible with fluids HFA, HFB and HFC	•	•	

Bypass valve	
E	3 bar
B	1.75 bar

Execution	
P01	MP Filtri standard
Pxx	Customized

FILTER ELEMENT

Configuration example 1:	MF400	1	A25	H	B		P01
Configuration example 2:	MFX750	1	P10	N	V	E	P01

Element series and size

MF400 | **MF750** Filter element with standard spigot

Element length	MPF 450	MPF 451	MPF 750
1	•	•	•
2	•	•	
3	•	•	

Filtration rating (filter media)

A03	Inorganic microfiber 3 µm	**M25**	Wire mesh 25 µm
A06	Inorganic microfiber 6 µm	**M60**	Wire mesh 60 µm
A10	Inorganic microfiber 10 µm	**M90**	Wire mesh 90 µm
A16	Inorganic microfiber 16 µm	**P10**	Resin impregnated paper 10 µm
A25	Inorganic microfiber 25 µm	**P25**	Resin impregnated paper 25 µm

Element Δp	Filter media Axx	Mxx	Pxx
N 10 bar		•	•
H 10 bar	•		
W 10 bar, compatible with fluids HFA, HFB and HFC	•	•	

Seals	
B	NBR
V	FPM

Bypass valve	
E	3 bar
	1.75 bar

Execution	
P01	MP Filtri standard
Pxx	Customized

ACCESSORIES

Indicators	page
BVA Axial pressure gauge	240
BVR Radial pressure gauge	240
BVP Visual pressure indicator with automatic reset	241
BVQ Visual pressure indicator with manual reset	241

	page
BEA Electrical pressure indicator	239
BEM Electrical pressure indicator	239
BLA Electrical / visual pressure indicator	239-240

Additional features	page
Sxx Extension tube	248
T5 Filler plug M30x1.5	249

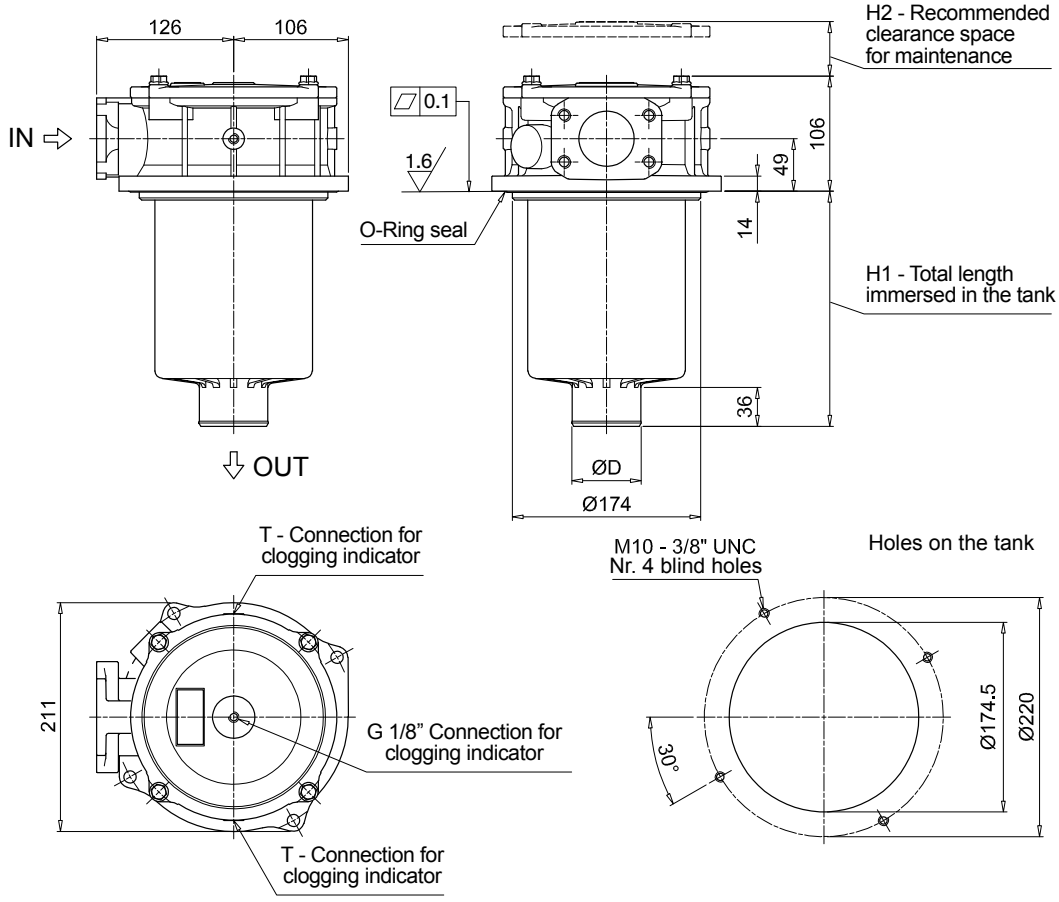

MPF450

Filter length	H1 [mm]	H2 [mm]	D [mm]
1	180	210	51
2	240	270	64
3	290	315	64

Connections	T
G1	G 1/8"
G4 - G7	1/8" NPT
F1	G 1/8"
F2	1/8" NPT

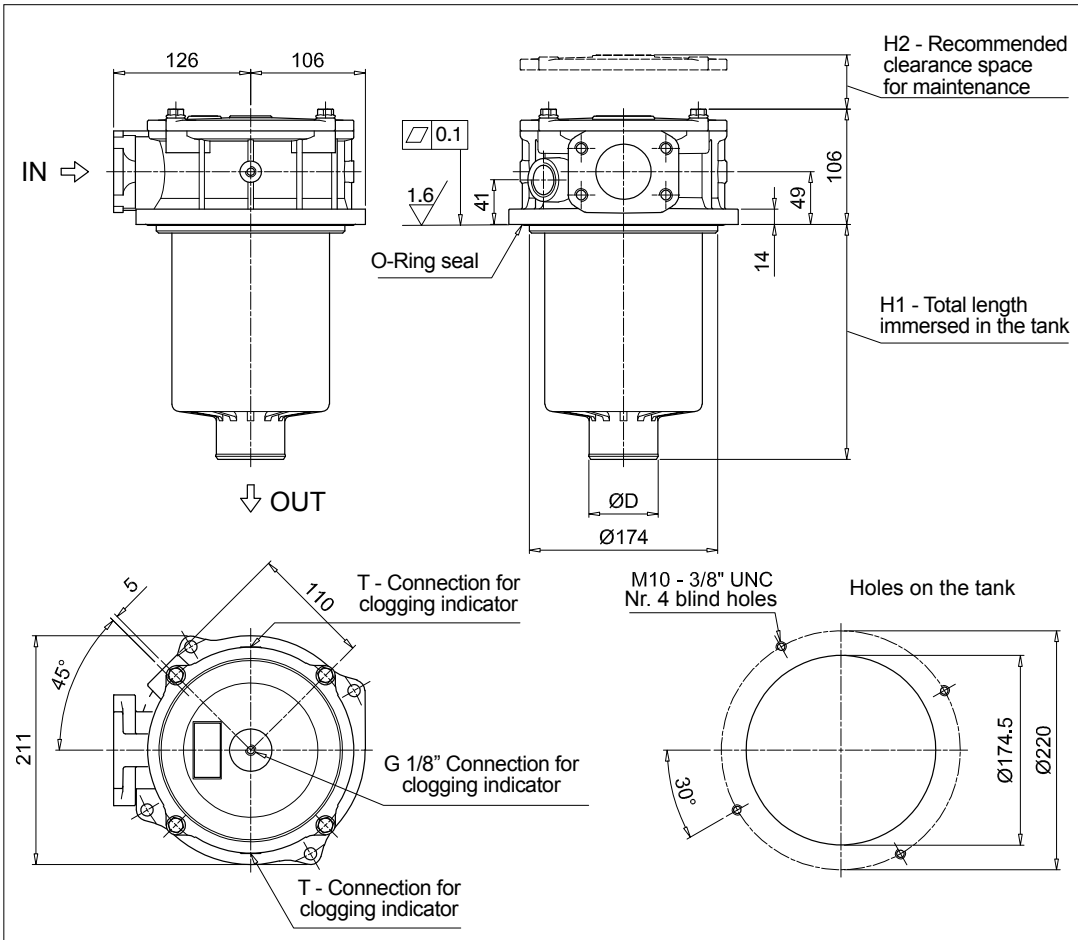

MPF451

Filter length	H1 [mm]	H2 [mm]	D [mm]
1	180	210	51
2	240	270	64
3	290	315	64

Connections	T
G1	G 1/8"
G4 - G7	1/8" NPT
F1	G 1/8"
F2	1/8" NPT

Dimensions

MPF750

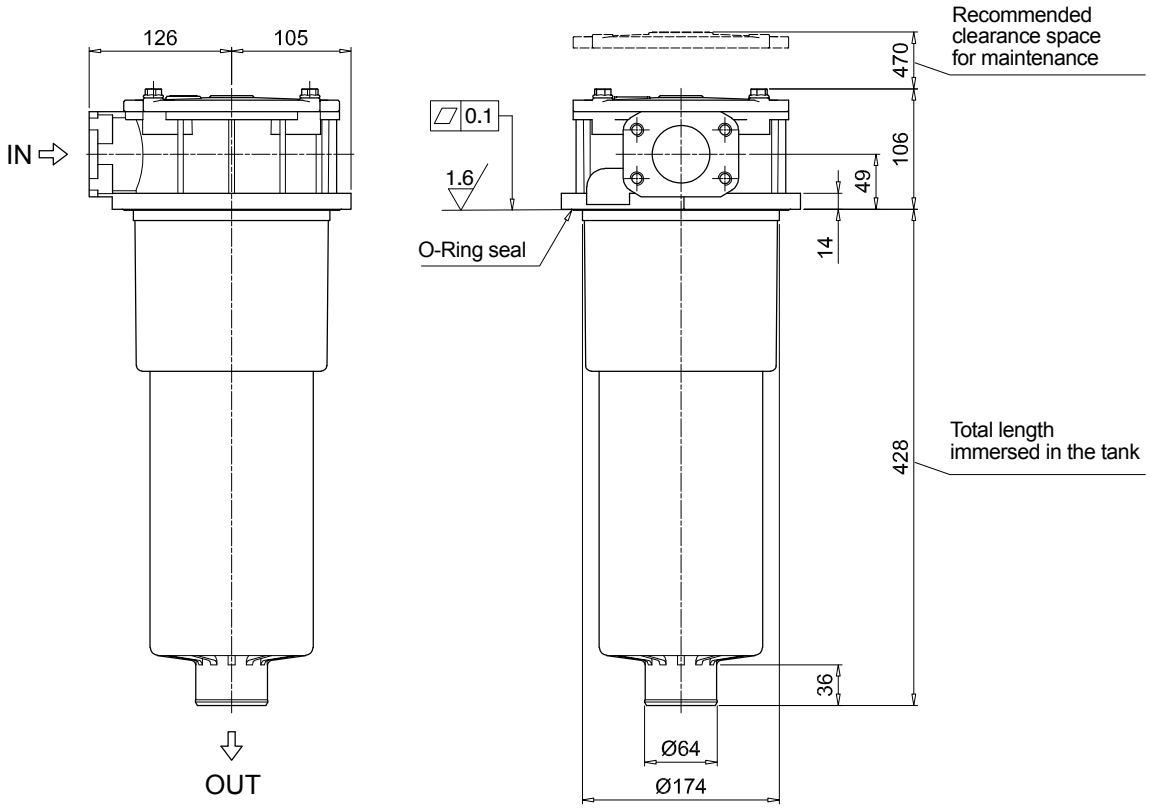

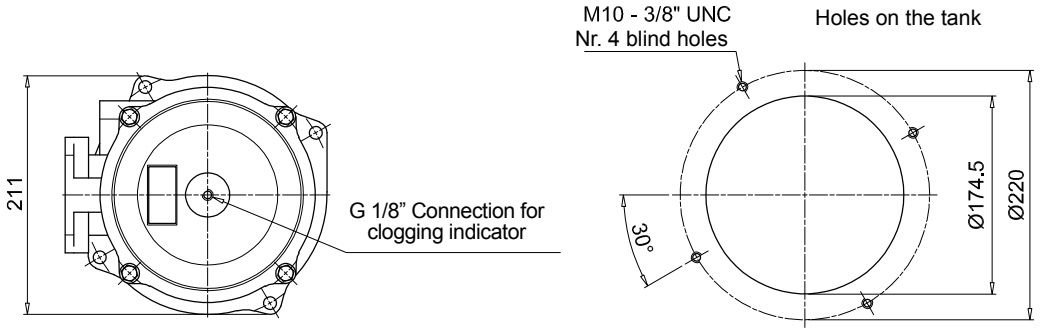

MPF 100

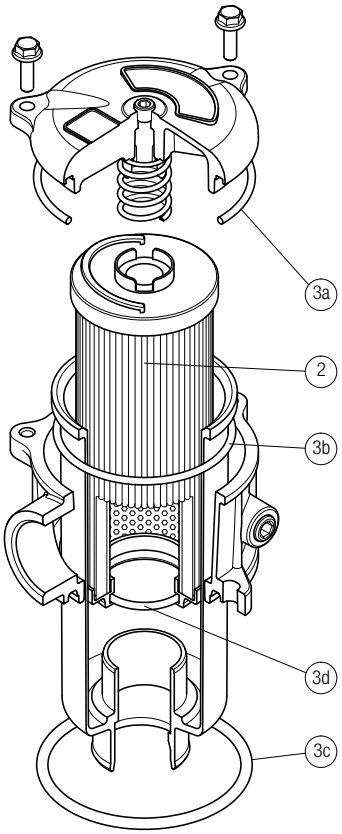

MPF 181

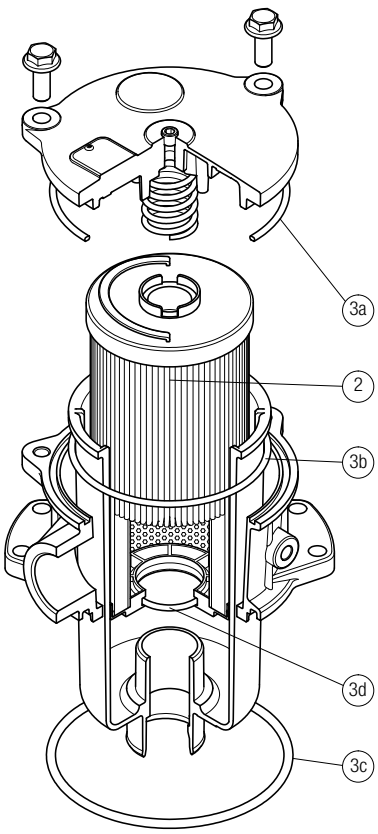

O-RING SEAL

Item:	Q.ty: 1 pc. 2	Q.ty: 1 pc. 3 (3a ÷ 3d)	
Filter series	Filter element	Seal Kit code number NBR	FPM
MPF 030	See order table	02050055	02050056
MPF 100-110		02050057	02050058
MPF 181-182		02050059	02050060
MPF 184		02050455	02050456
MPF 191-192		02050457	02050458
MPF 194		02050459	02050460
MPF 400-410		02050061	02050062
MPF 450-451		02050461	02050462
MPF 750		02050106	02050107

MPF 104

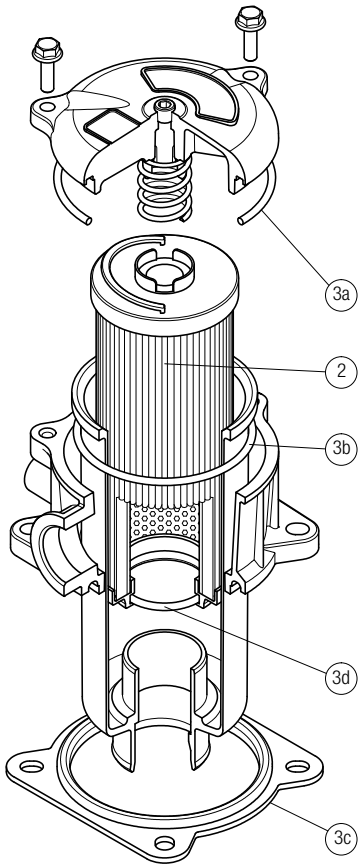

MPF 181

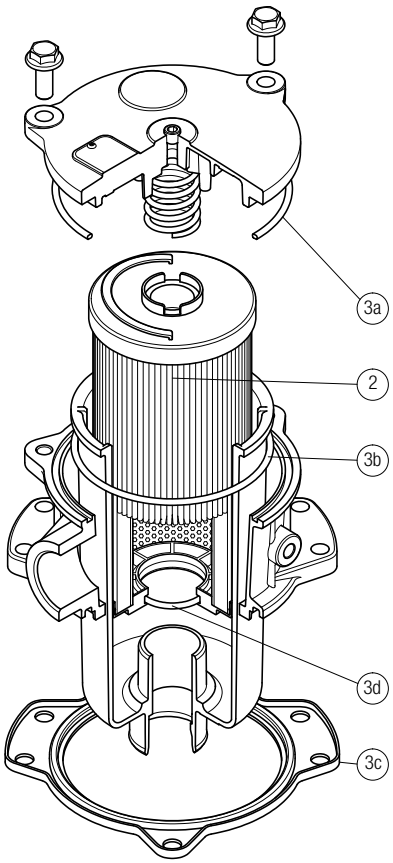

FLAT SEAL

Item:	Q.ty: 1 pc. 2	Q.ty: 1 pc. 3 (3a ÷ 3d)	
Filter series	Filter element	Seal Kit code number NBR	FPM
MPF 020	See order table	02050438	02050439
MPF 104		02050350	02050408
MPF 181-182		02050659	02050660
MPF 191-192		02050661	02050662

MPT series

Maximum working pressure up to 800 kPa (8 bar) - Flow rate up to 300 l/min



Description

Return filter

Maximum working pressure up to 800 kPa (8 bar)
Flow rate up to 300 l/min

MPT is a range of return filters with integrated breather filter, for protection of the reservoir against the system contamination.
They are directly fixed to the reservoir, in immersed or semi-immersed position.
The filter output must be always immersed into the fluid to avoid aeration or foam generation into the reservoir.

Available features:
- Female threaded connections up to 1 1/4", for a maximum flow rate of 300 l/min
- Multiple connections, to connect several return lines or drains
- Fine filtration rating, to get a good cleanliness level into the reservoir
- Bypass valve integrated into the filter element, to relieve excessive pressure drop across the filter media
- 2, 3 or 6 fixing holes for installation, to suit a variety of reservoir surfaces
- O-ring or Flat Seal to suit a variety of reservoir surfaces
- Screw-in cover with a special shape, to allow the filter element replacement without the use of specific tools
- Oil dipstick, to easily check the level of the fluid into the reservoir (sold as separate item)
- Extension tube, to be used in deep reservoirs (sold as separate item)
- Diffuser, to reduce the risk of aeration, foaming and noise (sold as separate item)
- Integrated breather filter, to clean the air that moves into the reservoir as result of the oil level fluctuation
- Integrated breather filter with pressurization valve, to clean the air that moves into the reservoir as result of the oil level fluctuation and to guarantee the pressurization into the reservoir
- Visual, electrical and electronic clogging indicators

Common applications:
- Light industrial equipment
- Mobile application

Technical data

Filter housing materials
- Head: Aluminium
- Cover: Nylon
- Bowl: Nylon

Bypass valve
- Opening pressure 175 kPa (1.75 bar) ±10%
- Opening pressure 300 kPa (3 bar) ±10%

Δp element type
- Microfibre filter elements - series H: 10 bar
- Fluid flow through the filter element from OUT to IN

Seals
- Standard NBR series A
- Optional FPM series V

Temperature
From -25 °C to +110 °C

Note
MPT filters are provided for vertical mounting



Weights [kg] and volumes [dm³]

Filter series	Weights [kg]					Volumes [dm³]				
	Length	1	2	3	4	Length	1	2	3	4
MPT 025		0.41	0.45	0.50	-		0.24	0.35	0.42	-
MPT 027		0.44	0.48	0.55	-		0.24	0.35	0.42	-
MPT 110		1.00	1.05	1.15	1.40		0.72	0.93	1.28	1.74
MPT 114		1.10	1.15	1.25	1.50		0.72	0.93	1.28	1.74
MPT 116		1.10	1.15	1.25	1.50		0.72	0.93	1.28	1.74
MPT 120		1.00	1.05	1.15	1.40		0.72	0.93	1.28	1.74

FILTER ASSEMBLY SIZING
Flow rates [l/min]

Filter series	Length	Filter element design - H series					Filter element design - N series		
		A03	A06	A10	A16	A25	M25 M60 M90	P10	P25
MPT 025-027	**1**	7	10	23	28	42	59	51	54
	2	17	20	45	48	56	72	64	67
	3	21	24	50	55	59	76	74	75
MPT 110-114 116-120	**1**	18	20	53	56	65	153	87	96
	2	28	38	65	75	95	158	111	123
	3	48	55	125	135	169	289	224	251
	4	79	89	180	185	198	306	264	289

Maximum flow rate for a complete return filter with a pressure drop Δp = 0.5 bar.
The reference fluid has a kinematic viscosity of 30 mm^2/s (cSt) and a density of 0.86 kg/dm^3.
For different pressure drop or fluid viscosity we recommend to use our selection software available on www.mpfiltri.com.
You can also calculate the right size using the formulas present on the FILTER SIZING paragraph at the beginning of the full catalogue or at the beginning of the filter family brochure.
Please, contact our Sales Department for further additional information.

Hydraulic symbols

Filter series	Style 1 connection	Style 2 connections	Style 3 connections
MPT 025	•		
MPT 027	•		
MPT 110		•	
MPT 114	•		
MPT 116	•		
MPT 120			•

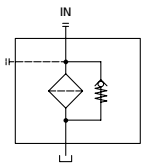

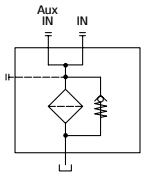

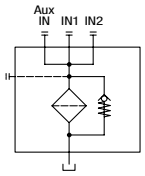

Pressure drop

Filter housings Δp pressure drop

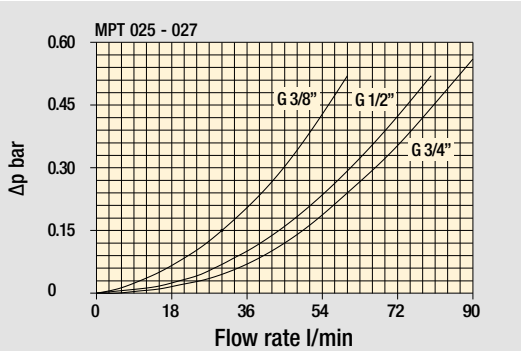

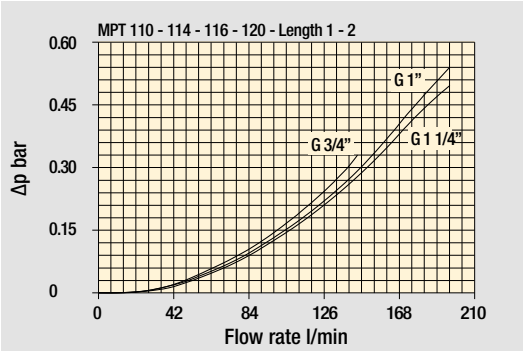

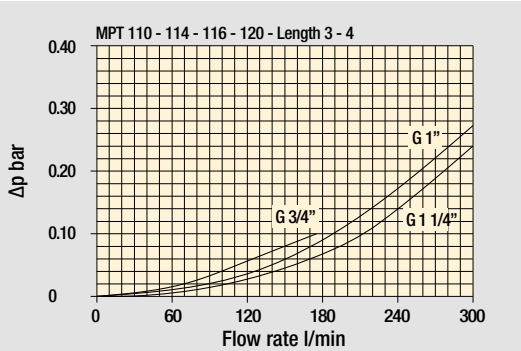

Bypass valve pressure drop

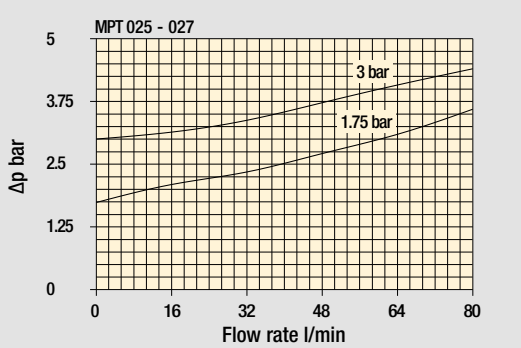

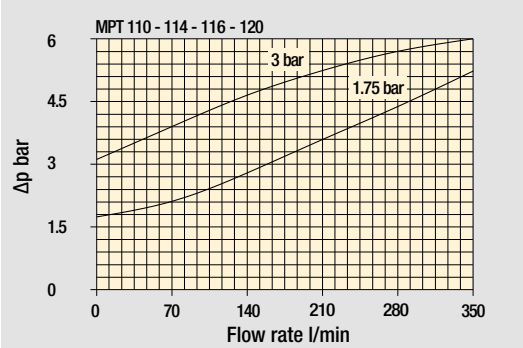

Air breather pressure drop

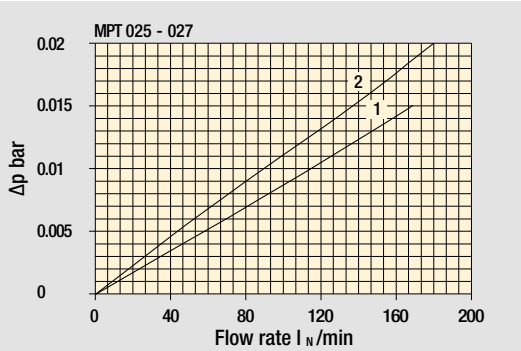

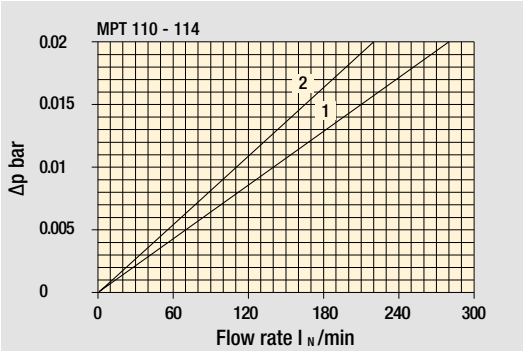

1 C With air breather 10 µm

2 D With anti-splash and SAP50 10 µm

The curves are plotted using mineral oil with density of 0.86 kg/dm³ in compliance with ISO 3968. Δp varies proportionally with density.

MPT 025 -027		
Air breather port plugged Indicator port	Air breather standard Indicator port	Anti-splash air breather & pressurized Double indicator port
		

Multiport - Multifunction

MPT 110	
Standard - Single IN Port	Double IN Port - Double indicator port
	
Double IN Port Option: double drain port	Double IN Port - Indicator port Option: drain port
	

MPT 120
Triple IN port Option: double drain port


Designation & Ordering code

COMPLETE FILTER

Configuration example 1: MPT025 | 1 | S | A | G3 | A10 | E | P01
Configuration example 2: MPT027 | 3 | C | W | G6 | A03 | B | P01

Series and size
MPT025 | **MPT027** Filter element with standard spigot

Length
1 | **2** | **3**

Air breather
S Without air breather
C With air breather 10 µm
D With anti-splash and air breather SAP050 10 µm
P With anti-splash and air breather SAP050 10 µm, pressurization 0.5 bar

Seals and treatments — Filtration rating: Axx | Mxx | Pxx
A NBR • • •
V FPM • • •
W NBR head anodized • • (filter element compatible with fluids HFA-HFB-HFC)
Z FPM head anodized • •

Connections
G1 G 3/8”
G2 G 1/2”
G3 G 3/4”
G4 3/8” NPT
G5 1/2” NPT
G6 3/4” NPT
G7 SAE 6 - 9/16” - 18 UNF
G8 SAE 8 - 3/4” - 16 UNF
G9 SAE 12 - 1 1/16” - 12 UN

Filtration rating (filter media)
A03 Inorganic microfiber 3 µm
A06 Inorganic microfiber 6 µm
A10 Inorganic microfiber 10 µm
A16 Inorganic microfiber 16 µm
A25 Inorganic microfiber 25 µm
M25 Wire mesh 25 µm
M60 Wire mesh 60 µm
M90 Wire mesh 90 µm
P10 Resin impregnated paper 10 µm
P25 Resin impregnated paper 25 µm

Bypass valve
E 3 bar
B 1.75 bar

Execution
P01 MP Filtri standard
Pxx Customized

FILTER ELEMENT

Configuration example 1: MF020 | 1 | A10 | H | B | E | P01
Configuration example 2: MF020 | 3 | A03 | W | B | | P01

Element series and size
MF020 Filter element with standard spigot

Element length
1 | **2** | **3**

Filtration rating (filter media)
A03 Inorganic microfiber 3 µm
A06 Inorganic microfiber 6 µm
A10 Inorganic microfiber 10 µm
A16 Inorganic microfiber 16 µm
A25 Inorganic microfiber 25 µm
M25 Wire mesh 25 µm
M60 Wire mesh 60 µm
M90 Wire mesh 90 µm
P10 Resin impregnated paper 10 µm
P25 Resin impregnated paper 25 µm

Element Δp — Filter media: Axx | Mxx | Pxx
N 10 bar • •
H 10 bar •
W 10 bar, compatible with fluids HFA, HFB and HFC • •

Seals
B NBR
V FPM

Bypass valve
E 3 bar
1.75 bar

Execution
P01 MP Filtri standard
Pxx Customized

ACCESSORIES

Indicators		page
BVA	Axial pressure gauge	240
BVR	Radial pressure gauge	240
BVP	Visual pressure indicator with automatic reset	241
BVQ	Visual pressure indicator with manual reset	241

Additional features		page
TE	Extension tube	248
DPT	Dipstick	249

		page
BEA	Electrical pressure indicator	239
BEM	Electrical pressure indicator	239
BLA	Electrical / visual pressure indicator	239-240

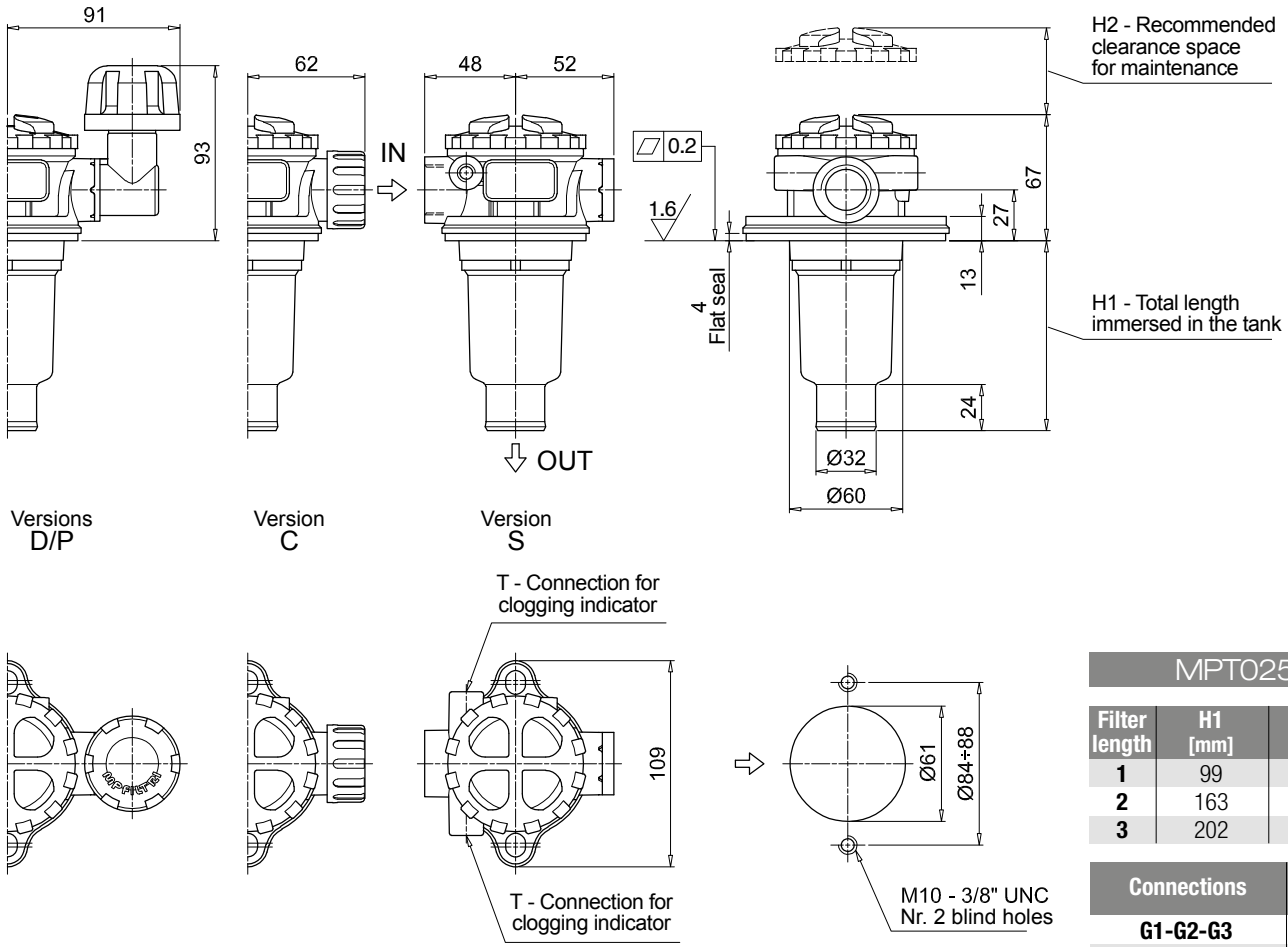

MPT025

Filter length	H1 [mm]	H2 [mm]
1	99	130
2	163	195
3	202	230

Connections	T
G1-G2-G3	G 1/8"
G4-G5-G6-G7-G8-G9	1/8" NPT

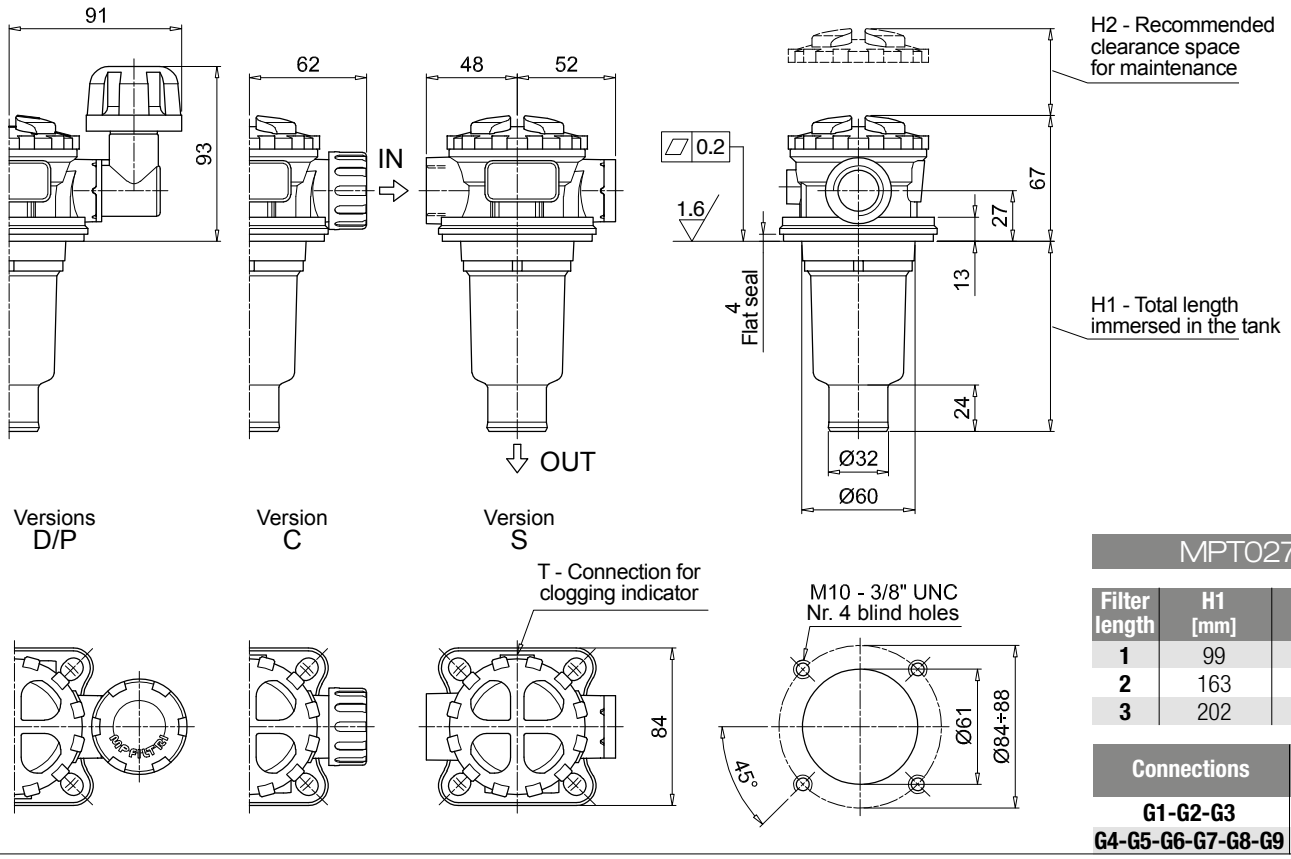

MPT027

Filter length	H1 [mm]	H2 [mm]
1	99	130
2	163	195
3	202	230

Connections	T
G1-G2-G3	G 1/8"
G4-G5-G6-G7-G8-G9	1/8" NPT

MPT MPT110

Designation & Ordering code

COMPLETE FILTER

Configuration example 1:	MPT110	1	S	A	G1	0	A06	E	P01
Configuration example 2:	MPT110	3	P	V	G4	1	M25	B	P01

Series and size

MPT110 Filter element with standard spigot

Length

1 | **2** | **3** | **4**

Air breather

S	Without air breather
C	With air breather 10 µm
D	With anti-splash and air breather SAP050 10 µm
P	With anti-splash and air breather SAP050 10 µm, pressurization 0.5 bar

Seals and treatments

		Filtration rating Axx	Mxx	Pxx
A	NBR	•	•	•
V	FPM	•	•	•
W	NBR head anodized	•	•	
Z	FPM head anodized	•	•	

filter element compatible with fluids HFA-HFB-HFC

Main Connections		Aux size 1	Aux size 2
G1	G 3/4"	G 3/8"	G 1/2"
G2	G 1"		
G3	G 1 1/4"		
G4	3/4" NPT	3/8" NPT	1/2" NPT
G5	1" NPT		

Main Connections		Aux size 2	Aux size 2
G6	1 1/4" NPT	3/8" NPT	1/2" NPT
G7	SAE 12 - 1 1/16" - 12 UN	SAE 6 - 9/16" - 18 UNF	SAE 8 - 3/4" - 16 UNF
G8	SAE 16 - 1 5/16" - 12 UN		
G9	SAE 20 - 1 5/8" - 12 UN		

Aux connection - see previous table

0 Not machined **1** Aux size 1 **2** Aux size 2

Filtration rating (filter media)

A03	Inorganic microfiber 3 µm	**M25**	Wire mesh 25 µm
A06	Inorganic microfiber 6 µm	**M60**	Wire mesh 60 µm
A10	Inorganic microfiber 10 µm	**M90**	Wire mesh 90 µm
A16	Inorganic microfiber 16 µm	**P10**	Resin impregnated paper 10 µm
A25	Inorganic microfiber 25 µm	**P25**	Resin impregnated paper 25 µm

Bypass valve

E	3 bar
B	1.75 bar

Execution

P01	MP Filtri standard
Pxx	Customized

FILTER ELEMENT

Configuration example 1:	MF100	1	A06	H	B	E	P01
Configuration example 2:	MF100	3	M25	N	V		P01

Element series and size

MF100 Filter element with standard spigot

Element length

1 | **2** | **3** | **4**

Filtration rating (filter media)

A03	Inorganic microfiber 3 µm	**M25**	Wire mesh 25 µm
A06	Inorganic microfiber 6 µm	**M60**	Wire mesh 60 µm
A10	Inorganic microfiber 10 µm	**M90**	Wire mesh 90 µm
A16	Inorganic microfiber 16 µm	**P10**	Resin impregnated paper 10 µm
A25	Inorganic microfiber 25 µm	**P25**	Resin impregnated paper 25 µm

Element Δp

		Filter media Axx	Mxx	Pxx
N	10 bar		•	•
H	10 bar	•		
W	10 bar, compatible with fluids HFA, HFB and HFC	•	•	

Seals

B	NBR
V	FPM

Bypass valve

E	3 bar
	1.75 bar

Execution

P01	MP Filtri standard
Pxx	Customized

ACCESSORIES

Indicators		page
BVA	Axial pressure gauge	240
BVR	Radial pressure gauge	240
BVP	Visual pressure indicator with automatic reset	241
BVQ	Visual pressure indicator with manual reset	241
BEA	Electrical pressure indicator	239
BEM	Electrical pressure indicator	239
BLA	Electrical / visual pressure indicator	239-240

Additional features		page
TE	Extension tube	248
DFS	Diffuser with fast lock connection	249
DPT	Dipstick	249

MPT110				
Filter length	**H1 [mm]**	**H2 [mm]**	**D [mm]**	**I [mm]**
1	97	120	38	4
2	144	170	38	4
3	222	250	47	-
4	324	350	47	2.5

Connections	T
G1-G2-G3	G 1/8"
G4-G5-G6-G7-G8-G9	1/8" NPT

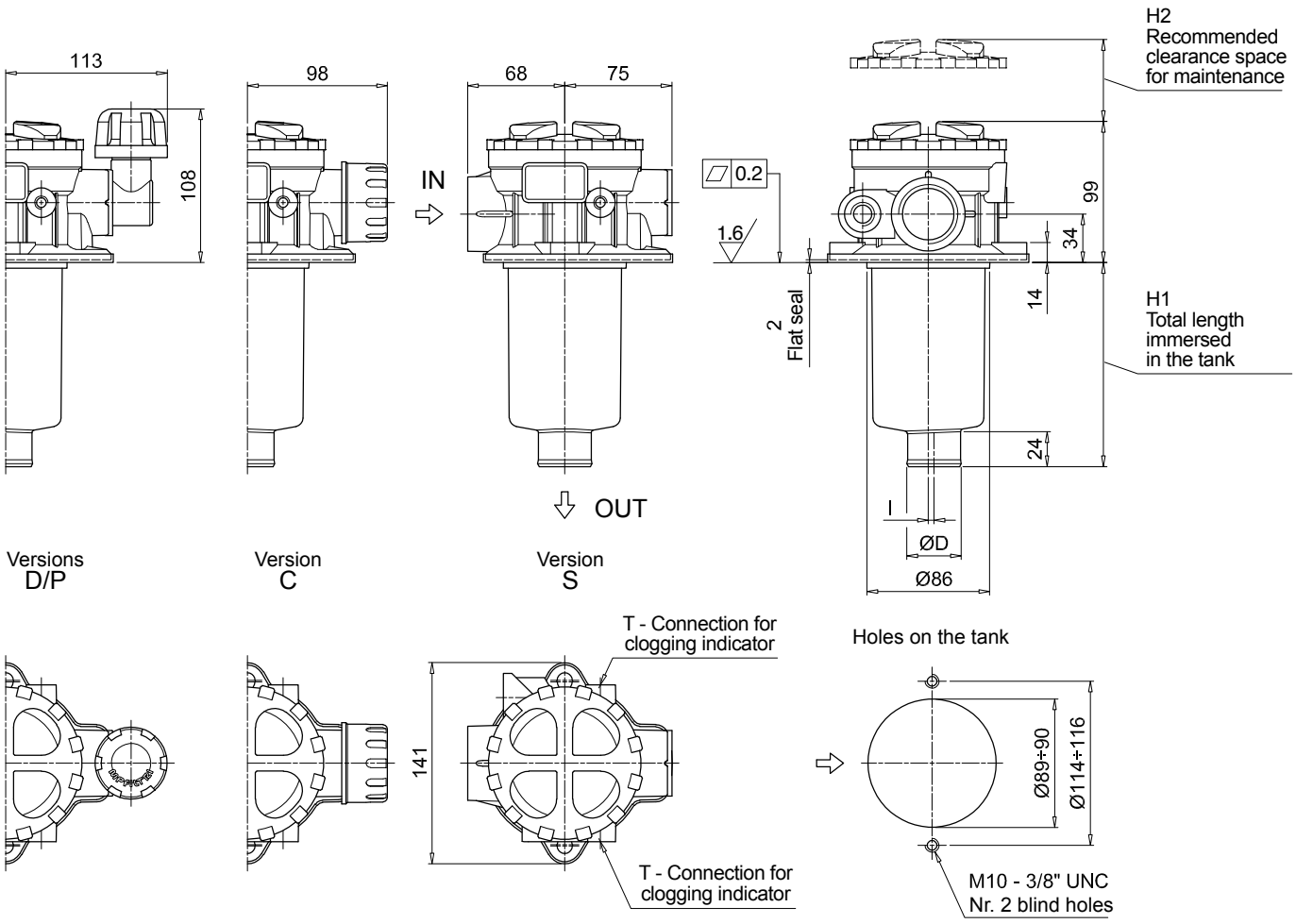

Designation & Ordering code

COMPLETE FILTER

Configuration example 1:	MPT114	4	S	A	G3	A10	E	P01
Configuration example 2:	MPT114	3	C	W	G6	A03	B	P01

Series and size

MPT114 Filter element with standard spigot

Length

1 | **2** | **3** | **4**

Air breather

S	Without air breather
C	With air breather 10 µm
D	With anti-splash and air breather SAP050 10 µm
P	With anti-splash and air breather SAP050 10 µm pressurization 0.5 bar

Seals and treatments

		Filtration rating Axx	Mxx	Pxx
A	NBR	•	•	•
V	FPM	•	•	•
W	NBR head anodized (filter element compatible with fluids HFA-HFB-HFC)	•	•	
Z	FPM head anodized (filter element compatible with fluids HFA-HFB-HFC)	•	•	

Connections

G1	G 3/4”	**G6**	1 1/4” NPT
G2	G 1”	**G7**	SAE 12 - 1 1/16” - 12 UN
G3	G 1 1/4”	**G8**	SAE 16 - 1 5/16” - 12 UN
G4	3/4” NPT	**G9**	SAE 20 - 1 5/8” - 12 UN
G5	1” NPT		

Filtration rating (filter media)

A03	Inorganic microfiber 3 µm	**M25**	Wire mesh 25 µm
A06	Inorganic microfiber 6 µm	**M60**	Wire mesh 60 µm
A10	Inorganic microfiber 10 µm	**M90**	Wire mesh 90 µm
A16	Inorganic microfiber 16 µm	**P10**	Resin impregnated paper 10 µm
A25	Inorganic microfiber 25 µm	**P25**	Resin impregnated paper 25 µm

Bypass valve

E	3 bar
B	1.75 bar

Execution

P01	MP Filtri standard
Pxx	Customized

FILTER ELEMENT

Configuration example 2:	MF100	4	A10	H	B	E	P01
Configuration example 1:	MF100	3	A03	W	B		P01

Element series and size

MF100 Filter element with standard spigot

Element length

1 | **2** | **3** | **4**

Filtration rating (filter media)

A03	Inorganic microfiber 3 µm	**M25**	Wire mesh 25 µm
A06	Inorganic microfiber 6 µm	**M60**	Wire mesh 60 µm
A10	Inorganic microfiber 10 µm	**M90**	Wire mesh 90 µm
A16	Inorganic microfiber 16 µm	**P10**	Resin impregnated paper 10 µm
A25	Inorganic microfiber 25 µm	**P25**	Resin impregnated paper 25 µm

Element Δp

		Filter media Axx	Mxx	Pxx
N	10 bar		•	•
H	10 bar	•		
W	10 bar, compatible with fluids HFA, HFB and HFC	•	•	

Seals

B	NBR
V	FPM

Bypass valve

E	3 bar
	1.75 bar

Execution

P01	MP Filtri standard
Pxx	Customized

ACCESSORIES

Indicators

		page
BVA	Axial pressure gauge	240
BVR	Radial pressure gauge	240
BVP	Visual pressure indicator with automatic reset	241
BVQ	Visual pressure indicator with manual reset	241
BEA	Electrical pressure indicator	239
BEM	Electrical pressure indicator	239
BLA	Electrical / visual pressure indicator	239-240

Additional features

		page
TE	Extension tube	248
DFS	Diffuser with fast lock connection	249
DPT	Dipstick	249

MPT114				
Filter length	**H1 [mm]**	**H2 [mm]**	**D [mm]**	**I [mm]**
1	97	120	38	4
2	144	170	38	4
3	222	250	47	-
4	324	350	47	2.5

Connections	T
G1-G2-G3	G 1/8"
G4-G5-G6-G7-G8-G9	1/8" NPT

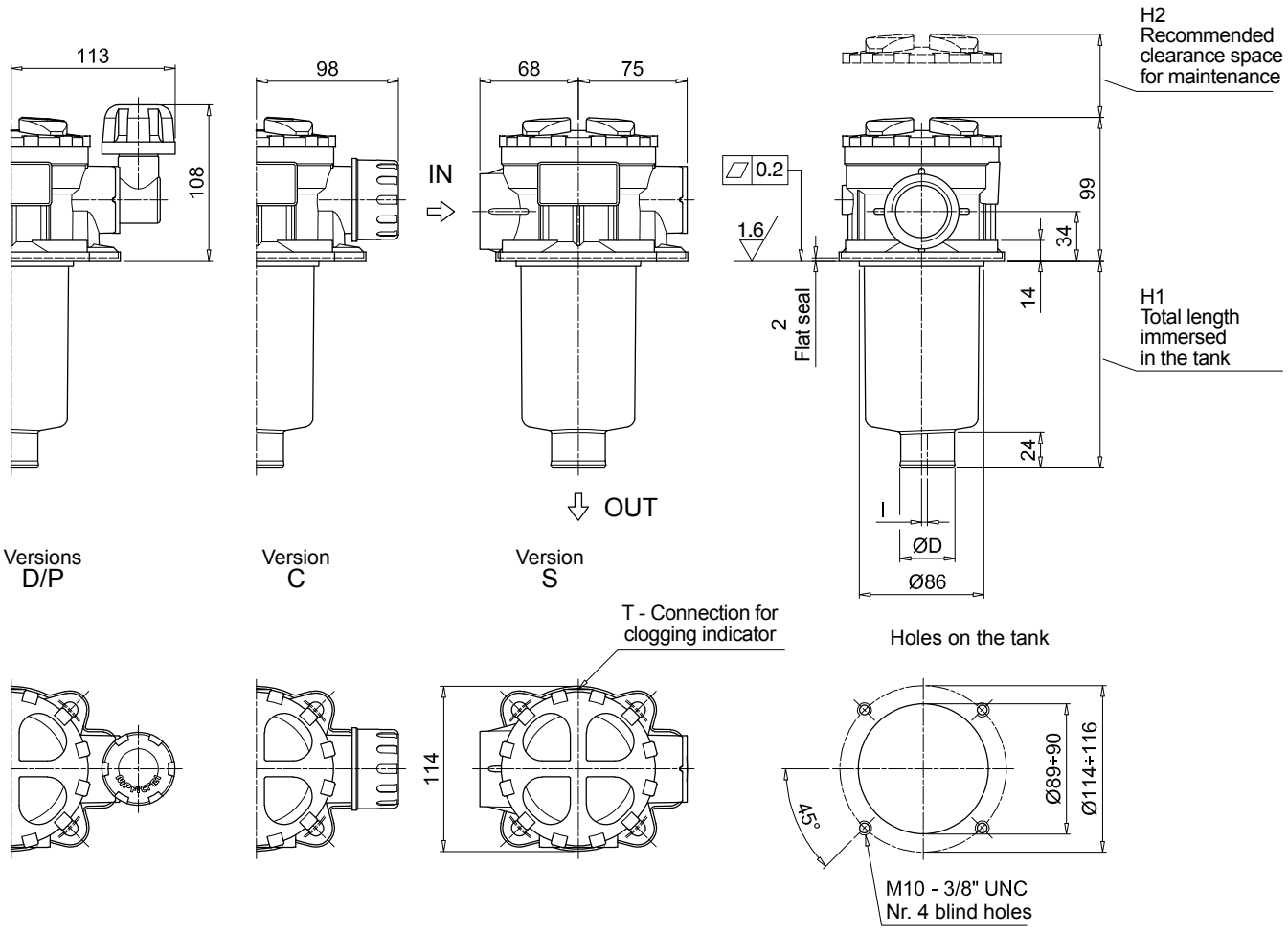

Designation & Ordering code

COMPLETE FILTER

Configuration example 1:	MPT116	1	S	A	G1	M90	E	P01
Configuration example 2:	MPT116	2	S	Z	G9	A03	B	P01

Series and size

MPT116 Filter element with standard spigot

Length

1 | **2** | **3** | **4**

Air breather

S Without air breather

Seals and treatments

		Filtration rating Axx	Mxx	Pxx
A	NBR	•	•	•
V	FPM	•	•	•
W	NBR head anodized	•	•	
Z	FPM head anodized	•	•	

filter element compatible with fluids HFA-HFB-HFC

Flat seal on the head on request

Connections

G1	G 3/4”	**G6**	1 1/4” NPT
G2	G 1”	**G7**	SAE 12 - 1 1/16” - 12 UN
G3	G 1 1/4”	**G8**	SAE 16 - 1 5/16” - 12 UN
G4	3/4” NPT	**G9**	SAE 20 - 1 5/8” - 12 UN
G5	1” NPT		

Filtration rating (filter media)

A03	Inorganic microfiber 3 µm	**M25**	Wire mesh 25 µm
A06	Inorganic microfiber 6 µm	**M60**	Wire mesh 60 µm
A10	Inorganic microfiber 10 µm	**M90**	Wire mesh 90 µm
A16	Inorganic microfiber 16 µm	**P10**	Resin impregnated paper 10 µm
A25	Inorganic microfiber 25 µm	**P25**	Resin impregnated paper 25 µm

Bypass valve

E 3 bar

B 1.75 bar

Execution

P01 MP Filtri standard

Pxx Customized

FILTER ELEMENT

Configuration example 2:	MF100	1	M90	N	B	E	P01
Configuration example 1:	MF100	2	A03	W	V		P01

Element series and size

MF100 Filter element with standard spigot

Element length

1 | **2** | **3** | **4**

Filtration rating (filter media)

A03	Inorganic microfiber 3 µm	**M25**	Wire mesh 25 µm
A06	Inorganic microfiber 6 µm	**M60**	Wire mesh 60 µm
A10	Inorganic microfiber 10 µm	**M90**	Wire mesh 90 µm
A16	Inorganic microfiber 16 µm	**P10**	Resin impregnated paper 10 µm
A25	Inorganic microfiber 25 µm	**P25**	Resin impregnated paper 25 µm

Element Δp

		Filter media Axx	Mxx	Pxx
N	10 bar		•	•
H	10 bar	•		
W	10 bar, compatible with fluids HFA, HFB and HFC	•	•	

Seals

B NBR

V FPM

Bypass valve

E 3 bar

1.75 bar

Execution

P01 MP Filtri standard

Pxx Customized

ACCESSORIES

Indicators		page
BVA	Axial pressure gauge	240
BVR	Radial pressure gauge	240
BVP	Visual pressure indicator with automatic reset	241
BVQ	Visual pressure indicator with manual reset	241
BEA	Electrical pressure indicator	239
BEM	Electrical pressure indicator	239
BLA	Electrical / visual pressure indicator	239-240

Additional features		page
TE	Extension tube	248
DFS	Diffuser with fast lock connection	249
DPT	Dipstick	249

MPT116				
Filter length	**H1 [mm]**	**H2 [mm]**	**D [mm]**	**I [mm]**
1	99	120	38	4
2	146	170	38	4
3	224	250	47	-
4	326	350	47	2.5

Connections	T
G1-G2-G3	G 1/8"
G4-G5-G6-G7-G8-G9	1/8" NPT

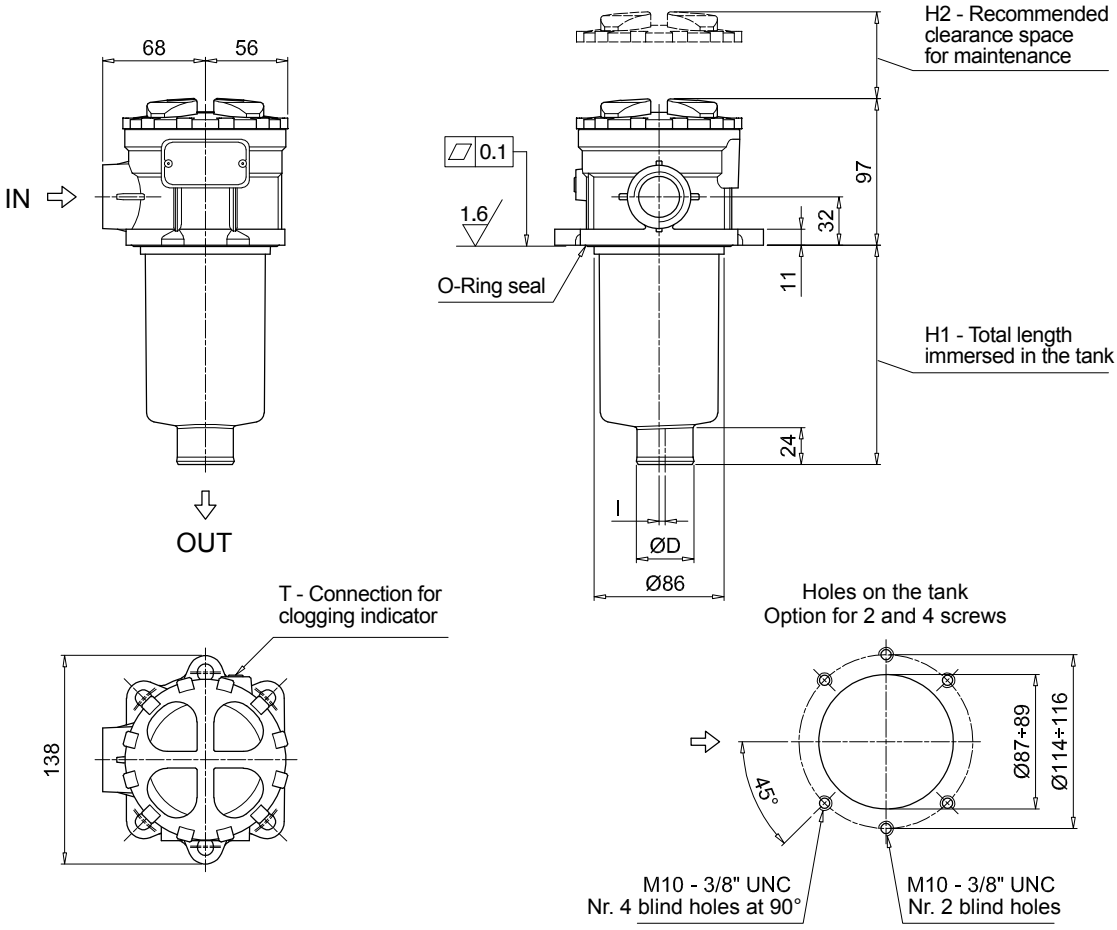

Designation & Ordering code

COMPLETE FILTER

Configuration example 1:	MPT120	1	A	G1	0	A06	E	P01
Configuration example 2:	MPT120	3	V	G4	1	M25	B	P01

Series and size

MPT120 Filter element with standard spigot

Length

1 | **2** | **3** | **4**

Seals and treatments

		Filtration rating Axx	Mxx	Pxx
A	NBR	•	•	•
V	FPM	•	•	•
W	NBR head anodized	•	•	
Z	FPM head anodized	•	•	

filter element compatible with fluids HFA-HFB-HFC

Main Connections	Rear connections	Aux size 1	Aux size 2
G1 G 3/4”	G 3/4”	G 3/8”	G 1/2”
G2 G 1”	G 1”		
G3 G 1 1/4”	G 3/4”		
G4 3/4” NPT	3/4” NPT	3/8” NPT	1/2” NPT
G5 1” NPT	1” NPT		
G6 1 1/4” NPT	3/4” NPT		
G7 SAE 12 - 1 1/16” - 12 UN	SAE 12 - 1 1/16” - 12 UN	SAE 6 - 9/16” - 18 UNF	SAE 8 - 3/4” - 16 UNF
G8 SAE 16 - 1 5/16” - 12 UN	SAE 16 - 1 5/16” - 12 UN		
G9 SAE 20 - 1 5/8” - 12 UN	SAE 12 - 1 1/16” - 12 UN		

Aux connection - see previous table

0 Not machined **1** Aux size 1 **2** Aux size 2

Filtration rating (filter media)

A03	Inorganic microfiber 3 µm	**M25**	Wire mesh 25 µm
A06	Inorganic microfiber 6 µm	**M60**	Wire mesh 60 µm
A10	Inorganic microfiber 10 µm	**M90**	Wire mesh 90 µm
A16	Inorganic microfiber 16 µm	**P10**	Resin impregnated paper 10 µm
A25	Inorganic microfiber 25 µm	**P25**	Resin impregnated paper 25 µm

Bypass valve

E 3 bar

B 1.75 bar

Execution

P01 MP Filtri standard

Pxx Customized

FILTER ELEMENT

Configuration example 1:	MF100	1	A06	H	B	E	P01
Configuration example 2:	MF100	3	M25	N	V		P01

Element series and size

MF100 Filter element with standard spigot

Element length

1 | **2** | **3** | **4**

Filtration rating (filter media)

A03	Inorganic microfiber 3 µm	**M25**	Wire mesh 25 µm
A06	Inorganic microfiber 6 µm	**M60**	Wire mesh 60 µm
A10	Inorganic microfiber 10 µm	**M90**	Wire mesh 90 µm
A16	Inorganic microfiber 16 µm	**P10**	Resin impregnated paper 10 µm
A25	Inorganic microfiber 25 µm	**P25**	Resin impregnated paper 25 µm

Element Δp

		Filter media Axx	Mxx	Pxx
N	10 bar		•	•
H	10 bar	•		
W	10 bar, compatible with fluids HFA, HFB and HFC	•	•	

Seals

B NBR

V FPM

Bypass valve

E 3 bar

1.75 bar

Execution

P01 MP Filtri standard

Pxx Customized

ACCESSORIES

Indicators		page
BVA	Axial pressure gauge	240
BVR	Radial pressure gauge	240
BVP	Visual pressure indicator with automatic reset	241
BVQ	Visual pressure indicator with manual reset	241
BEA	Electrical pressure indicator	239
BEM	Electrical pressure indicator	239
BLA	Electrical / visual pressure indicator	239-240

Additional features		page
TE	Extension tube	248
DFS	Diffuser with fast lock connection	249
DPT	Dipstick	249

MPT120				
Filter length	**H1 [mm]**	**H2 [mm]**	**D [mm]**	**I [mm]**
1	97	120	38	4
2	147	170	38	4
3	222	250	47	-
4	324	350	47	2.5

Connections	T
G1-G2-G3	G 1/8"
G4-G5-G6-G7-G8-G9	1/8" NPT

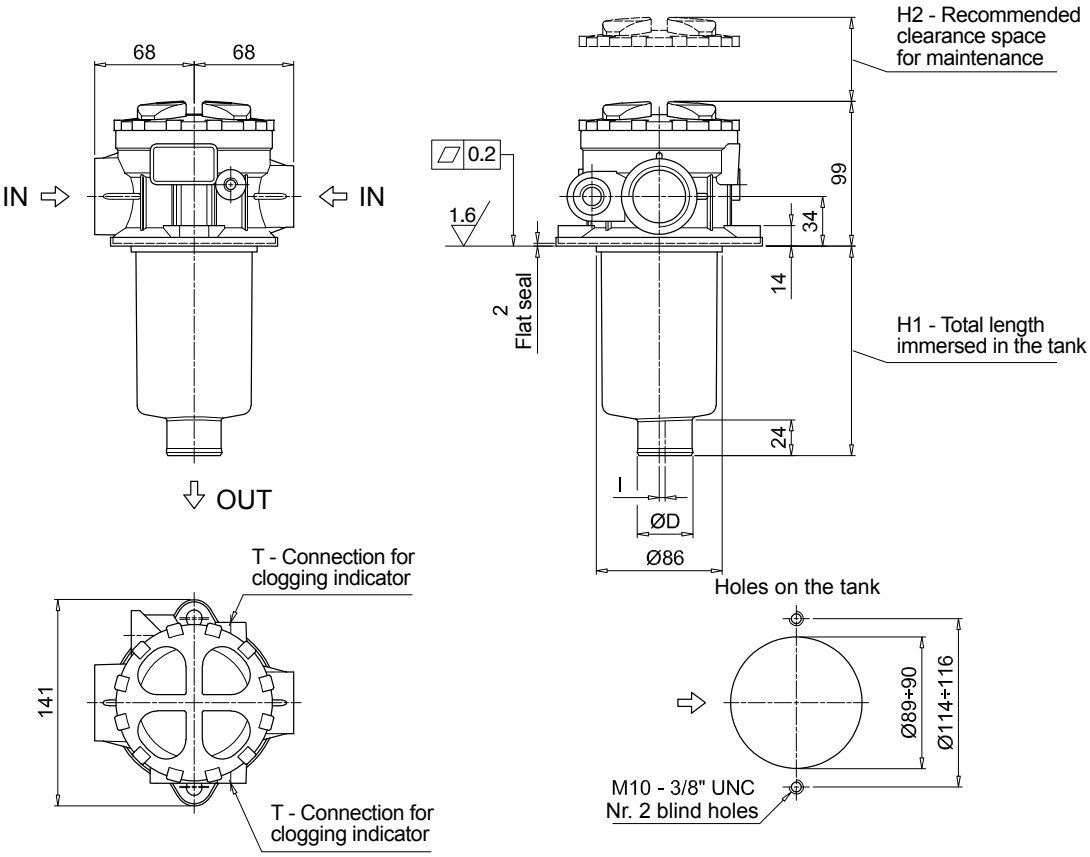

Order number for spare parts

MPT 025 - 027 - 110

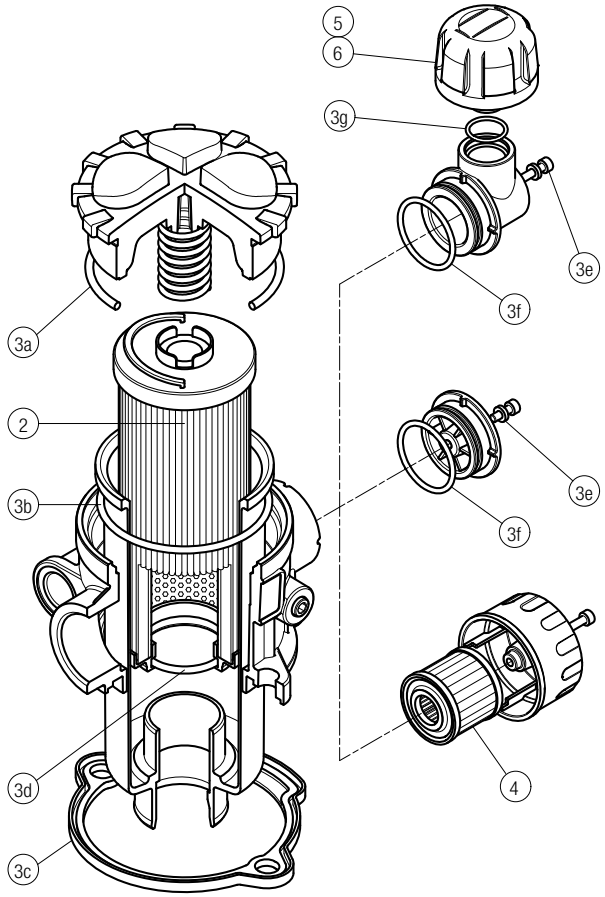

Item:	Q.ty: 1 pc. 2	Q.ty: 1 pc. 3 (3a ÷ 3g)		Q.ty: 1 pc. 4	Q.ty: 1 pc. 5	Q.ty: 1 pc. 6
Filter series	Filter element	Seal Kit code number NBR	FPM	C	D	P
MPT 025	See order table	02050557	02050558	10 µm A3L03	10 µm SAP50G3L03A0P01	10 µm SAP50G3L03A1P01
MPT 027		02050559	02050560	10 µm A3L03	10 µm SAP50G3L03A0P01	10 µm SAP50G3L03A1P01
MPT 110		02050561	02050562	10 µm A5L03	10 µm SAP50G3L03A0P01	10 µm SAP50G3L03A1P01

MPT 116

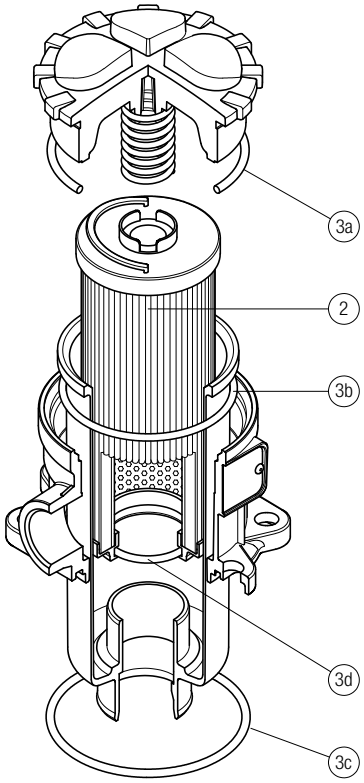

Item:	Q.ty: 1 pc. 2	Q.ty: 1 pc. 3 (3a ÷ 3d)	
Filter series	Filter element	Seal Kit code number NBR	FPM
MPT 116	See order table	02050466	02050467

Order number for spare parts

MPT 114

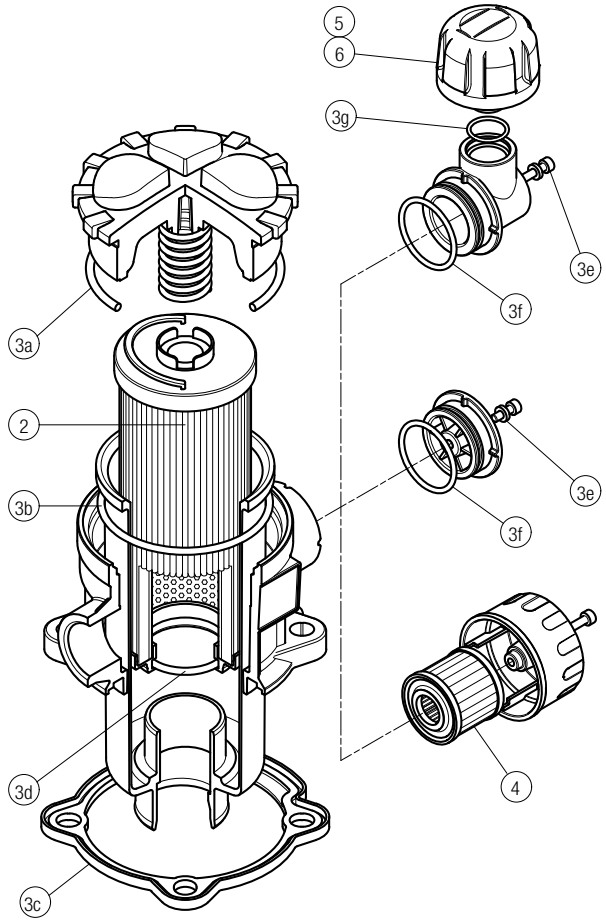

Item:	Q.ty: 1 pc. 2	Q.ty: 1 pc. 3 (3a ÷ 3g)		Q.ty: 1 pc. 4	Q.ty: 1 pc. 5	Q.ty: 1 pc. 6
Filter series	Filter element	Seal Kit code number NBR	FPM	Air breather filter element - version: C	D	P
MPT 114	See order table	02050580	02050581	10 µm A5L03	10 µm SAP50G3L03A0P01	10 µm SAP50G3L03A1P01

MPT 120

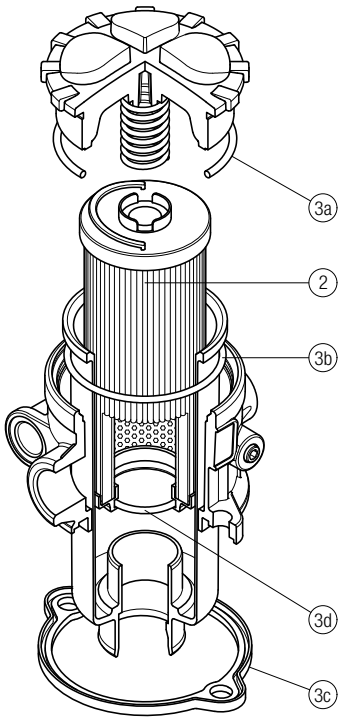

Item:	Q.ty: 1 pc. 2	Q.ty: 1 pc. 3 (3a ÷ 3d)	
Filter series	Filter element	Seal Kit code number NBR	FPM
MPT 120	See order table	02050563	02050564

MFB series
BOWL ASSEMBLY

Maximum working pressure up to 800 kPa (8 bar) - Flow rate up to 700 l/min



MFB GENERAL INFORMATION

Description

Return filter | Bowl assembly

Maximum working pressure up to 800 kPa (8 bar)
Flow rate up to 700 l/min

MFB is a range of return filter kits for protection of the reservoir against the system contamination.
They are directly integrated in the moulded reservoir in immersed or semi-immersed position to save space into the tank.
Treaded or flanged covers can be provided.
The filter output must be always immersed into the fluid to avoid aeration or foam generation into the reservoir.

Available features:

- Fine filtration rating, to get a good cleanliness level into the reservoir
- Bypass valve integrated into the filter element, to relieve excessive pressure drop across the filter media
- Extension tube, to be used in deep reservoirs (sold as separate item)
- Diffuser, to reduce the risk of aeration, foaming and noise (sold as separate item)

Common applications:

Mobile machines

Technical data

Bowl assembly materials

- Cover
  Nylon: MFB 020-030-100
  Aluminium: MFB 180-190

- Bowl: Nylon

Filter element materials

- Caps: Nylon
- Spring: Spring steel

Bypass valve

- Opening pressure 175 kPa (1.75 bar) ±10%
- Opening pressure 300 kPa (3 bar) ±10%

Δp element type

- Microfibre filter elements - series H: 10 bar
- Fluid flow through the filter element from OUT to IN

Seals

- Standard NBR series A
- Optional FPM series V

Temperature

From -25 °C to +110 °C

Note

MFB filters are provided for vertical mounting



Weights [kg] and volumes [dm³]

Filter series	Weights [kg]					Volumes [dm³]				
	Length	1	2	3	4	Length	1	2	3	4
MFB 020		0.25	0.35	0.40	-		0.10	0.15	0.20	-
MFB 030		0.25	-	-	-		0.15	-	-	-
MFB 100		0.50	0.60	0.75	0.95		0.35	0.50	0.80	1.10
MFB 180		1.60	2.40	-	-		1.50	2.90	-	-
MFB 190		-	2.40	-	-		-	3.00	-	-

FILTER ASSEMBLY SIZING
Flow rates [l/min]

Filter series	Length	Filter element design - H series					Filter element design - N series		
		A03	A06	A10	A16	A25	M25 M60 M90	P10	P25
MFB 020	**1**	7	10	23	28	42	59	51	54
	2	17	20	45	48	56	72	64	67
	3	21	24	50	55	59	76	74	75
MFB 030	**1**	7	10	24	29	47	84	60	66
MFB 100	**1**	18	20	53	56	65	153	87	96
	2	28	38	65	75	95	158	111	123
	3	48	55	125	135	169	289	224	251
	4	79	89	180	185	198	306	264	289
MFB 180	**1**	127	148	235	243	278	441	285	299
	2	231	262	358	382	388	472	404	412
MFB 190	**2**	261	305	489	528	546	696	583	598

Maximum flow rate for a complete return filter with a pressure drop Δp = 0.5 bar.
The reference fluid has a kinematic viscosity of 30 mm^2/s (cSt) and a density of 0.86 kg/dm^3.
For different pressure drop or fluid viscosity we recommend to use our selection software available on www.mpfiltri.com.
You can also calculate the right size using the formulas present on the FILTER SIZING paragraph at the beginning of the full catalogue or at the beginning of the filter family brochure.
Please, contact our Sales Department for further additional information.

Hydraulic symbols

Filter series	Style 1 connection
MFB 020	•
MFB 030	•
MFB 100	•
MFB 180	•
MFB 190	•

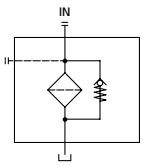

Designation & Ordering code

COMPLETE FILTER

Configuration example 1: MFB100 | 1 | A | 2 | A10 | H | E | P01

Configuration example 2: MFB180 | 2 | V | 1 | M25 | N | B | P01

Series and size

MFB020 | **MFB030** | **MFB100** | **MFB180** | **MFB190**

Filter element with private spigot

Length	MFB020	MFB030	MFB100	MFB180	MFB190
1	•	•	•	•	
2	•		•	•	•
3	•		•		
4			•		

Seals

A NBR

V FPM

Version	MFB020	MFB030	MFB100	MFB180	MFB190
1 Without cover	•	•	•	•	•
2 With flanged cover type MPF		•	•	•	•
3 With threaded cover type MPT	•		•		

Filtration rating (filter media)

A03 Inorganic microfiber 3 µm
A06 Inorganic microfiber 6 µm
A10 Inorganic microfiber 10 µm
A16 Inorganic microfiber 16 µm
A25 Inorganic microfiber 25 µm
M25 Wire mesh 25 µm
M60 Wire mesh 60 µm
M90 Wire mesh 90 µm
P10 Resin impregnated paper 10 µm
P25 Resin impregnated paper 25 µm

Element Δp	Filter media Axx	Mxx	Pxx
N 10 bar		•	•
H 10 bar	•		
W 10 bar, compatible with fluids HFA, HFB and HFC	•	•	

Bypass valve

E 3 bar
B 1.75 bar

Execution

P01 MP Filtri standard
Pxx Customized

FILTER ELEMENT

Configuration example 1: MF100 | 1 | A10 | H | B | E | P01

Configuration example 2: MF180 | 2 | M25 | N | V | | P01

Element series and size

MF020 | **MF030** | **MF100** | **MF180** | **MF190**

Filter element with private spigot

Element length	MF020	MF030	MF100	MF180	MF190
1	•	•	•	•	
2	•		•	•	•
3	•		•		
4			•		

Filtration rating (filter media)

A03 Inorganic microfiber 3 µm
A06 Inorganic microfiber 6 µm
A10 Inorganic microfiber 10 µm
A16 Inorganic microfiber 16 µm
A25 Inorganic microfiber 25 µm
M25 Wire mesh 25 µm
M60 Wire mesh 60 µm
M90 Wire mesh 90 µm
P10 Resin impregnated paper 10 µm
P25 Resin impregnated paper 25 µm

Element Δp	Filter media Axx	Mxx	Pxx
N 10 bar		•	•
H 10 bar	•		

Seals

B NBR
V FPM

Bypass valve

E 3 bar
1.75 bar

Execution

P01 MP Filtri standard
Pxx Customized

ACCESSORIES

Additional features	MFB020	MFB030	MFB100	MFB180	MFB190	page
TE Extension tube	•	•	•	•	•	248
DFS Diffuser with fast lock connection			•			249

MFB

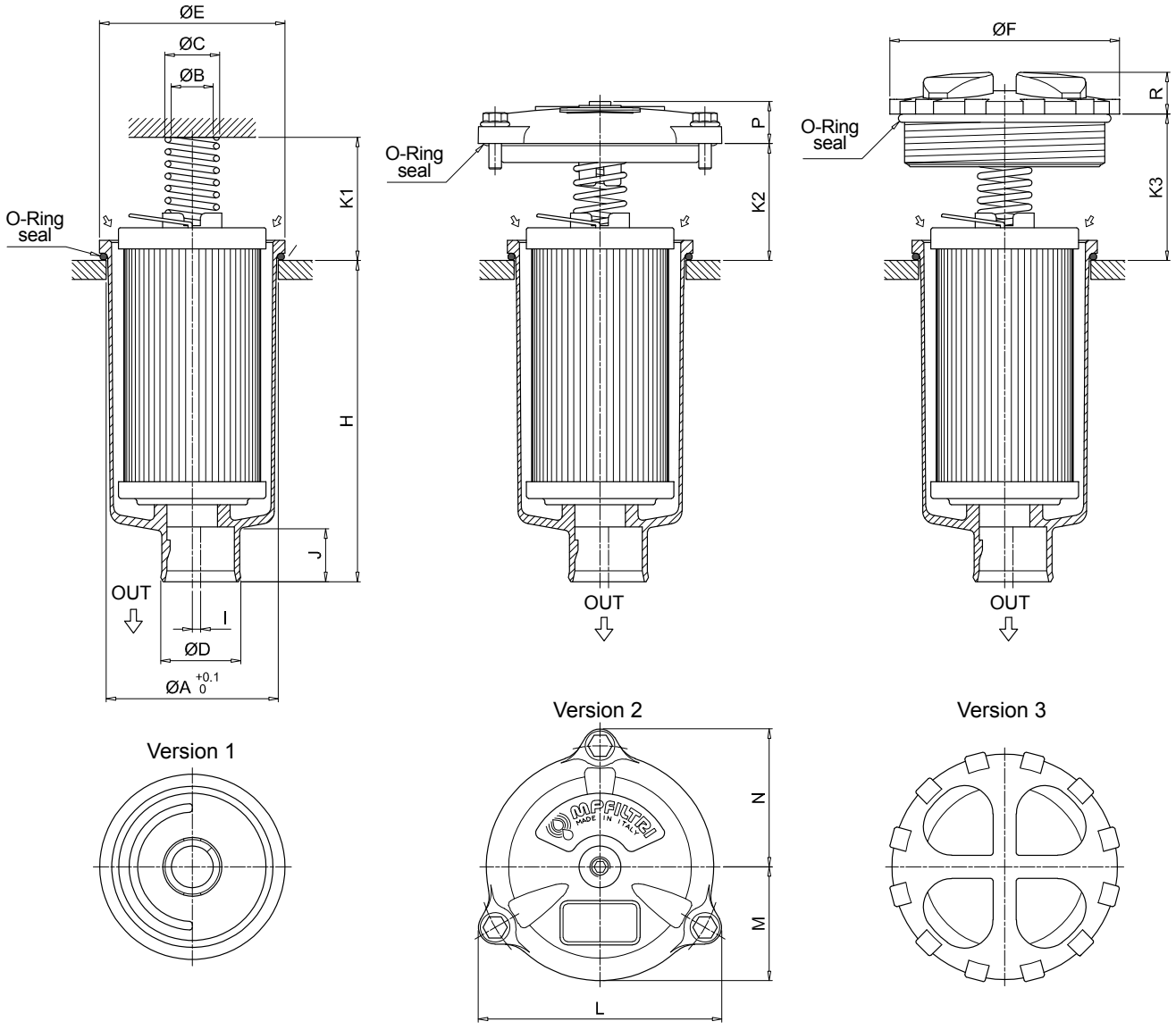

Filter size	Filter Length	ø A [mm]	ø B [mm]	ø C [mm]	ø D [mm]	ø E [mm]	ø F [mm]	H [mm]	I [mm]	J [mm]	K1 [mm]	K2 [mm]	K3 [mm]	L [mm]	M [mm]	N [mm]	P [mm]	R [mm]
020	1	52	20.5	26	32	56	75	111	0	24	42	-	36	-	-	-	-	18
	2	52	20.5	26	32	56	75	175	0	24	42	-	36	-	-	-	-	18
	3	52	20.5	26	32	56	75	214	0	24	42	-	36	-	-	-	-	18
030	1	60.5	20	25.5	32	68	-	92	3	21	33	35	-	92	42	52	18	-
100	1	80.5	20	26	38	88	111	107	4	24	58	55	69	116	54	66	20	20
	2	80.5	20	26	38	88	111	154	4	24	58	55	69	116	54	66	20	20
	3	80.5	20	26	47	88	111	232	0	24	58	55	69	116	54	66	20	20
	4	80.5	20	26	47	88	111	334	2.5	24	58	55	69	116	54	66	20	20
180	1	112.5	26	33.5	47	121	-	234	0	31	58	58	69	159	76	95	21	-
	2	112.5	26	33.5	47	121	-	447	0	31	58	58	69	159	76	95	21	-
190	2	112.5	26	33.5	50	121	-	454	0	38	58	58	69	159	76	95	21	-

Order number for spare parts

MFB version 1	MFB version 2

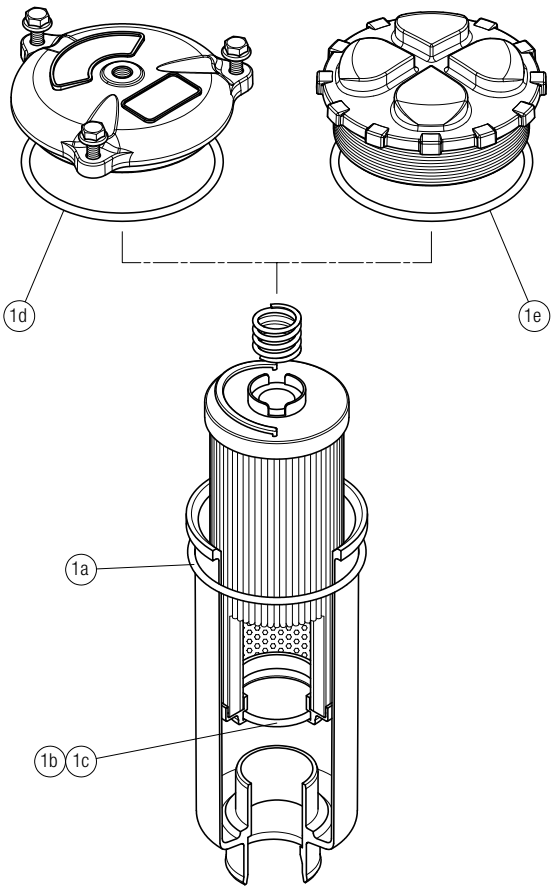

Item:	Q.ty: 1 pc. (1) (1a ÷ 1e)	
Filter series	Seal Kit code number NBR	FPM
MFB 020	02050572	02050573
MFB 030	02050574	02050575
MFB 100	02050555	02050556
MFB 180	02050576	02050577
MFB 190	02050578	02050579

MPH series

Maximum working pressure up to 1 MPa (10 bar) - Flow rate up to 3500 l/min



MPH GENERAL INFORMATION

Description

Return filter

Maximum working pressure up to 1 MPa (10 bar)
Flow rate up to 3500 l/min

MPH is a range of return filters for protection of the reservoir against the system contamination.
They are directly fixed to the reservoir, in immersed or semi-immersed position.
The use of the diffuser is recommended, to place the filter output always immersed into the fluid to avoid aeration or foam generation into the reservoir.
The filtration from inside to outside allows a cleaner filter element replacement, the dirty remains into the filter element.

Available features:
- Female threaded connections up to 1 1/2" and flanged connections up to 4", for a maximum flow rate of 3500 l/min
- Multiple connections, to connect several return lines or drains
- Fine filtration rating, to get a good cleanliness level into the reservoir
- Bypass valve, to relieve excessive pressure drop across the filter media
- Magnetic filter, to hold the ferrous particles
- 2, 3, 4 or 8 fixing holes for installation, to suit a variety of reservoir surfaces
- Flat Seal to suit a variety of reservoir surfaces
- Oil dipstick, to easily check the level of the fluid into the reservoir (separate item)
- Diffuser, to reduce the risk of aeration, foaming and noise
- Filler plug, to fill cleaned fluid into the tank without an additional plug
- Integrated breather filter, to clean the air that moves into the reservoir as result of the oil level fluctuation (MPH110/114)
- Integrated breather filter with pressurization valve, to clean the air that moves into the reservoir as result of the oil level fluctuation and to guarantee the pressurization into the reservoir (MPH110/114)
- Visual, electrical and electronic clogging indicators

Common applications:
Heavy duty industrial equipment

Technical data

Filter housing materials
- Head
  Aluminium: MPH 110-114-116-120-250
  Anodized Aluminium: MPH 630-850
  Painted Aluminium: MPH 660

- Cover
  Nylon: MPH 110-114-116-120
  Aluminium: MPH 250
  Anodized Aluminium: MPH 630
  Painted Aluminium: MPH 660
  Steel: MPH 850

- Insert assembly
  Nylon: MPH 110-114-116-120
  Aluminium: MPH 250-630-660-850

- Diffuser: Tinned Steel

- Valve: Phosphatized Steel

Bypass valve
- Opening pressure 175 kPa (1.75 bar)±10%
- Opening pressure 250 kPa (2.5 bar) ±10%, except for MPH 850

Δp element type
- Microfibre filter elements - series MR: 10 bar
- Fluid flow through the filter element from IN to OUT

Seals
- Standard NBR series A
- Optional FPM series V

Temperature
From -25 °C to +110 °C

Note
MPH filters are provided for vertical mounting



Weights [kg] and volumes [dm³]

Filter series	Weights [kg]						Volumes [dm³]					
	Length	1	2	3	4	5	Length	1	2	3	4	5
MPH 110		1.60	1.70	1.80	2.20	2.60		1.60	1.70	1.80	2.20	2.60
MPH 114		1.60	1.70	1.80	2.20	2.60		1.60	1.70	1.80	2.20	2.60
MPH 116		1.60	1.70	1.80	2.20	2.60		1.60	1.70	1.80	2.20	2.60
MPH 120		1.60	1.70	1.80	2.20	2.60		1.60	1.70	1.80	2.20	2.60
MPH 250		3.60	3.90	4.20	5.60	-		4.40	4.40	5.40	8.00	-
MPH 630		6.50	7.00	7.40	8.50	10.50		7.30	9.00	11.00	13.00	19.20
MPH 660		-	-	-	11.50	14.00		-	-	-	14.60	21.00
MPH 850		32.00	35.00	38.00	42.00	-		13.00	16.50	21.00	25.00	-

FILTER ASSEMBLY SIZING
Flow rates [l/min]

Filter series	Length	A03	A06	A10	A16	A25	M25 M60 M90	P10	P25
MPH 110-114 116-120	1	26	29	72	79	107	282	164	190
	2	43	46	112	114	161	318	164	190
	3	64	72	132	156	178	324	219	251
	4	90	99	184	198	216	324	266	302
	5	117	128	201	219	244	324	282	318
MPH 250	1	93	102	210	251	315	1093	339	383
	2	124	151	327	412	421	1122	460	514
	3	189	221	418	445	500	1137	544	616
	4	261	304	592	670	766	1166	832	923
MPH 630	1	160	200	369	423	518	1894	565	632
	2	240	257	571	611	1045	1929	1137	1285
	3	330	374	745	788	1308	1938	1416	1577
	4	374	403	887	1010	1348	1956	1448	1612
	5	625	698	1210	1257	1723	2121	1839	1929
MPH 660	4	370	399	903	1042	1460	2376	1596	1830
	5	624	699	1282	1343	1997	2663	2182	2331
MPH 850	1	775	1041	1246	1568	2242	3311	2371	2625
	2	1176	1522	1682	1747	2449	3378	2684	2886
	3	1490	1914	1995	2014	3035	3405	3144	3220
	4	1668	2088	2305	2363	3169	3517	3272	3378

Maximum flow rate for a complete return filter with a pressure drop Δp = 0.5 bar.
The reference fluid has a kinematic viscosity of 30 mm^2/s (cSt) and a density of 0.86 kg/dm^3.
For different pressure drop or fluid viscosity we recommend to use our selection software available on www.mpfiltri.com.
You can also calculate the right size using the formulas present on the FILTER SIZING paragraph at the beginning of the full catalogue or at the beginning of the filter family brochure.
Please, contact our Sales Department for further additional information.

Hydraulic symbols

Filter series	Style 1 connection	Style 2 connections	Style 3 connections
MPH 110		•	
MPH 114	•		
MPH 116	•		
MPH 120			•
MPH 250	•	•	
MPH 630	•	•	
MPH 660	•		
MPH 850		•	

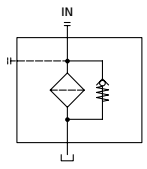

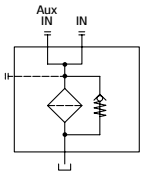

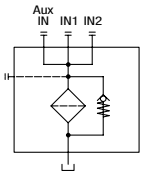

Pressure drop

Filter housings Δp pressure drop

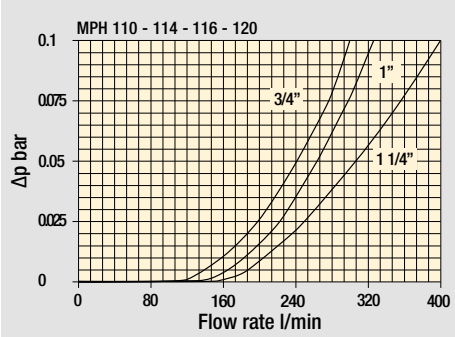

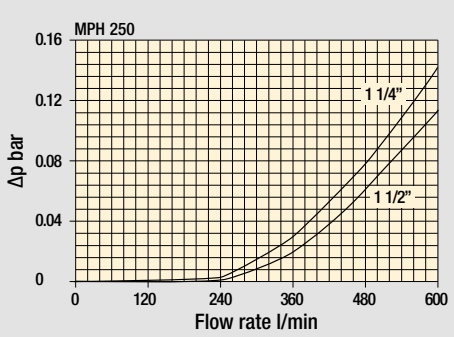

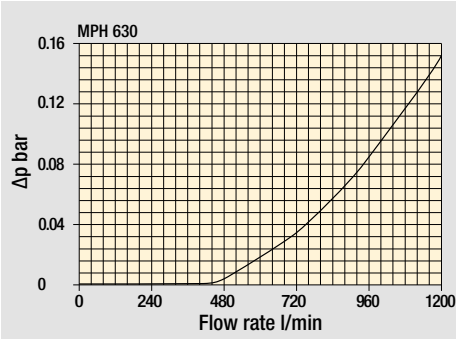

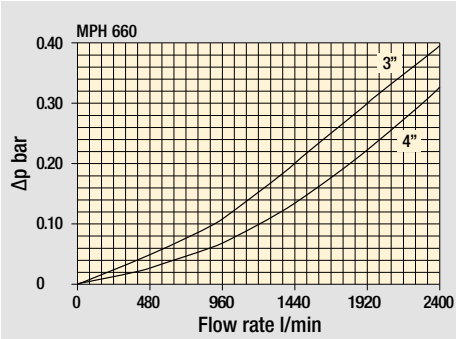

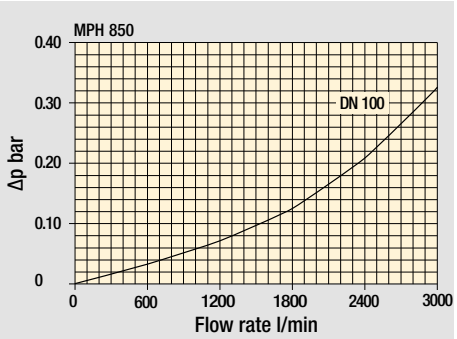

Bypass valve pressure drop

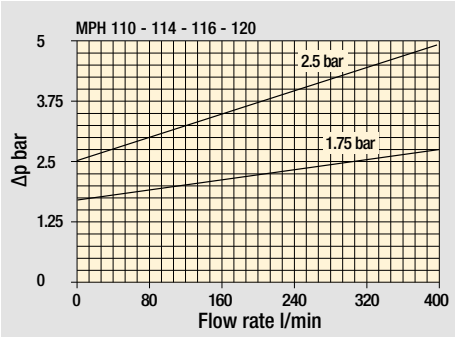

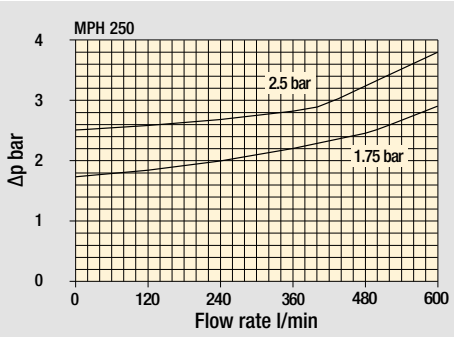

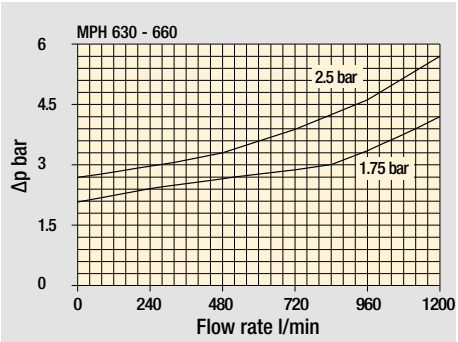

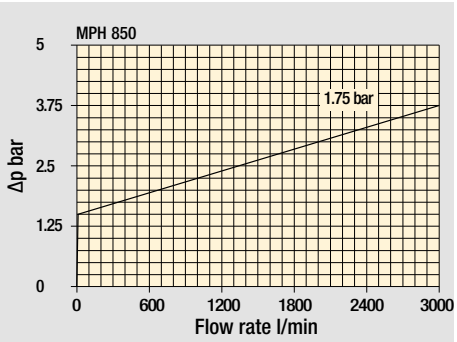

Air breather pressure drop

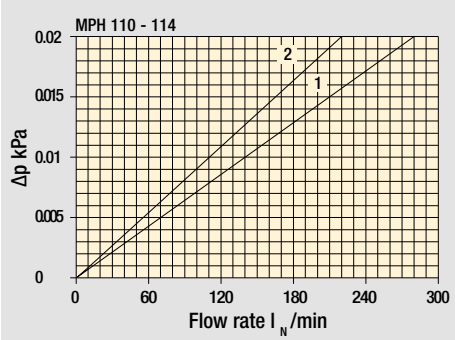

1 C With air breather 10 µm
2 D With anti-splash and SAP50 10 µm

The curves are plotted using mineral oil with density of 0.86 kg/dm³ in compliance with ISO 3968. Δp varies proportionally with density.

Designation & Ordering code

COMPLETE FILTER

Configuration example: MPH110 | 1 | S | D | S | A | G1 | 1 | A10 | P01

Series and size
MPH110

Length
1 | **2** | **3** | **4** | **5**

Bypass valve
S Without bypass **C** 1.75 bar **E** 2.5 bar

Diffuser and magnetic filter
D With diffuser, with magnetic filter
F With diffuser, without magnetic filter
O Without diffuser, with magnetic filter
E Without diffuser, without magnetic filter

Air breather
S Without air breather
C With air breather 10 µm
D With anti-splash and air breather SAP050 10 µm
P With anti-splash and air breather SAP050 10 µm pressurization 0.5 bar

Seals and treatments

		Filtration rating Axx	Mxx	Pxx
A	NBR	•	•	•
V	FPM	•	•	•
W	NBR head anodized	•	•	
Z	FPM head anodized	•	•	

filter element compatible with fluids HFA-HFB-HFC

Main Connections		Aux size 1	Aux size 2
G1	G 3/4"	G 3/8"	G 1/2"
G2	G 1"		
G3	G 1 1/4"		
G4	3/4" NPT	3/8" NPT	1/2" NPT
G5	1" NPT		
G6	1 1/4" NPT		

Main Connections		Aux size 1	Aux size 2
G7	SAE 12 - 1 1/16" - 12 UN	SAE 6 - 9/16" - 18 UNF	SAE 8 - 3/4" - 16 UNF
G8	SAE 16 - 1 5/16" - 12 UN		
G9	SAE 20 - 1 5/8" - 12 UN		

Aux connection - see previous table
0 Not machined **1** Aux size 1 **2** Aux size 2

Filtration rating (filter media)

A03	Inorganic microfiber 3 µm	**M25**	Wire mesh 25 µm
A06	Inorganic microfiber 6 µm	**M60**	Wire mesh 60 µm
A10	Inorganic microfiber 10 µm	**M90**	Wire mesh 90 µm
A16	Inorganic microfiber 16 µm	**P10**	Resin impregnated paper 10 µm
A25	Inorganic microfiber 25 µm	**P25**	Resin impregnated paper 25 µm

Execution
P01 MP Filtri standard
Pxx Customized

FILTER ELEMENT

Configuration example: MR100 | 1 | A10 | A | P01

Element series and size
MR100

Element length
1 | **2** | **3** | **4** | **5**

Filtration rating (filter media)

A03	Inorganic microfiber 3 µm	**M25**	Wire mesh 25 µm
A06	Inorganic microfiber 6 µm	**M60**	Wire mesh 60 µm
A10	Inorganic microfiber 10 µm	**M90**	Wire mesh 90 µm
A16	Inorganic microfiber 16 µm	**P10**	Resin impregnated paper 10 µm
A25	Inorganic microfiber 25 µm	**P25**	Resin impregnated paper 25 µm

Seals
A NBR
V FPM

Execution
P01 MP Filtri standard
Pxx Customized

ACCESSORIES

Indicators		page
BVA	Axial pressure gauge	240
BVR	Radial pressure gauge	240
BVP	Visual pressure indicator with automatic reset	241
BVQ	Visual pressure indicator with manual reset	241

		page
BEA	Electrical pressure indicator	239
BEM	Electrical pressure indicator	239
BLA	Electrical / visual pressure indicator	239-240

Additional features		page
DPT	Dipstick	249

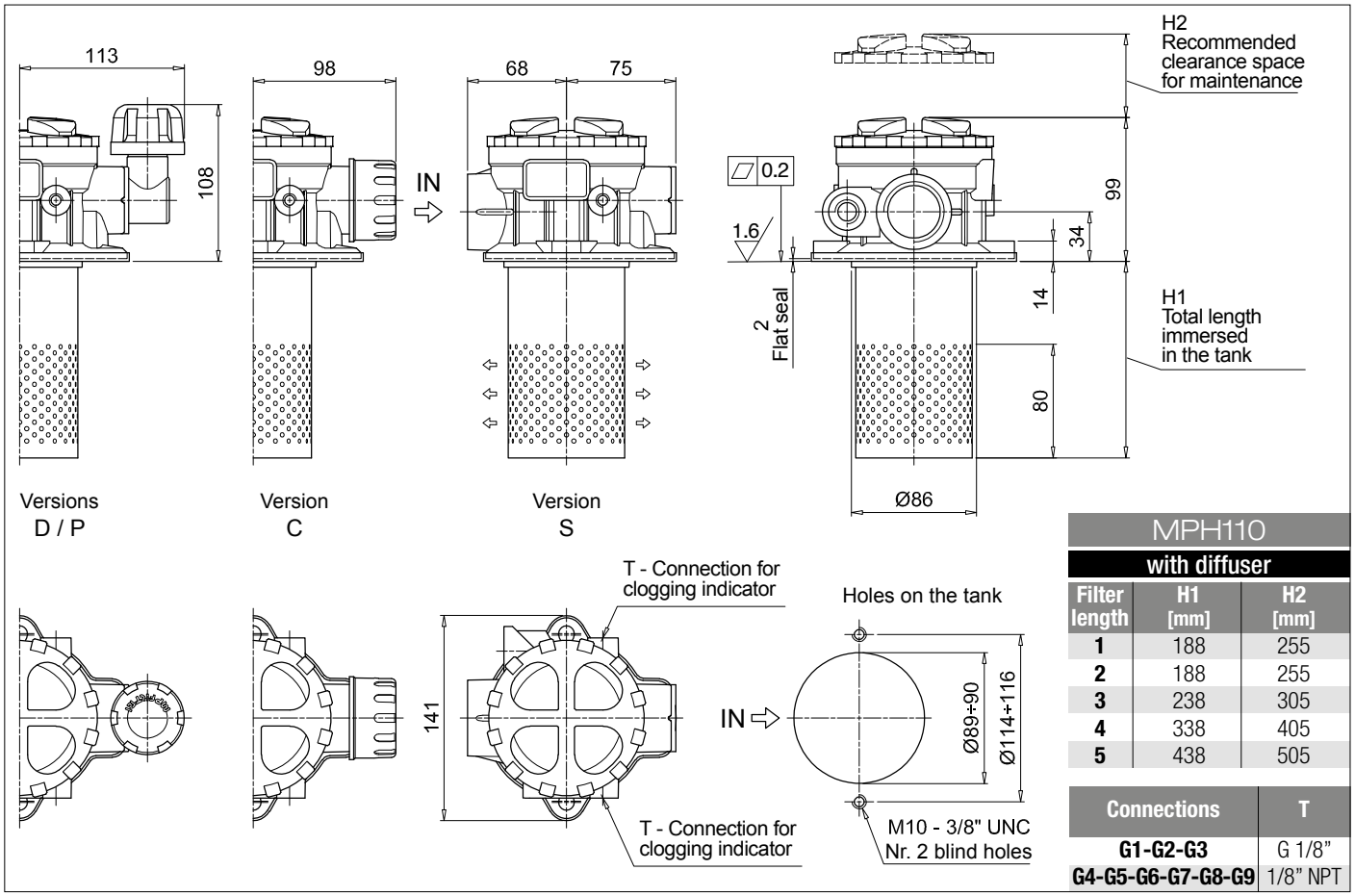

MPH110 with diffuser		
Filter length	H1 [mm]	H2 [mm]
1	188	255
2	188	255
3	238	305
4	338	405
5	438	505

Connections	T
G1-G2-G3	G 1/8"
G4-G5-G6-G7-G8-G9	1/8" NPT

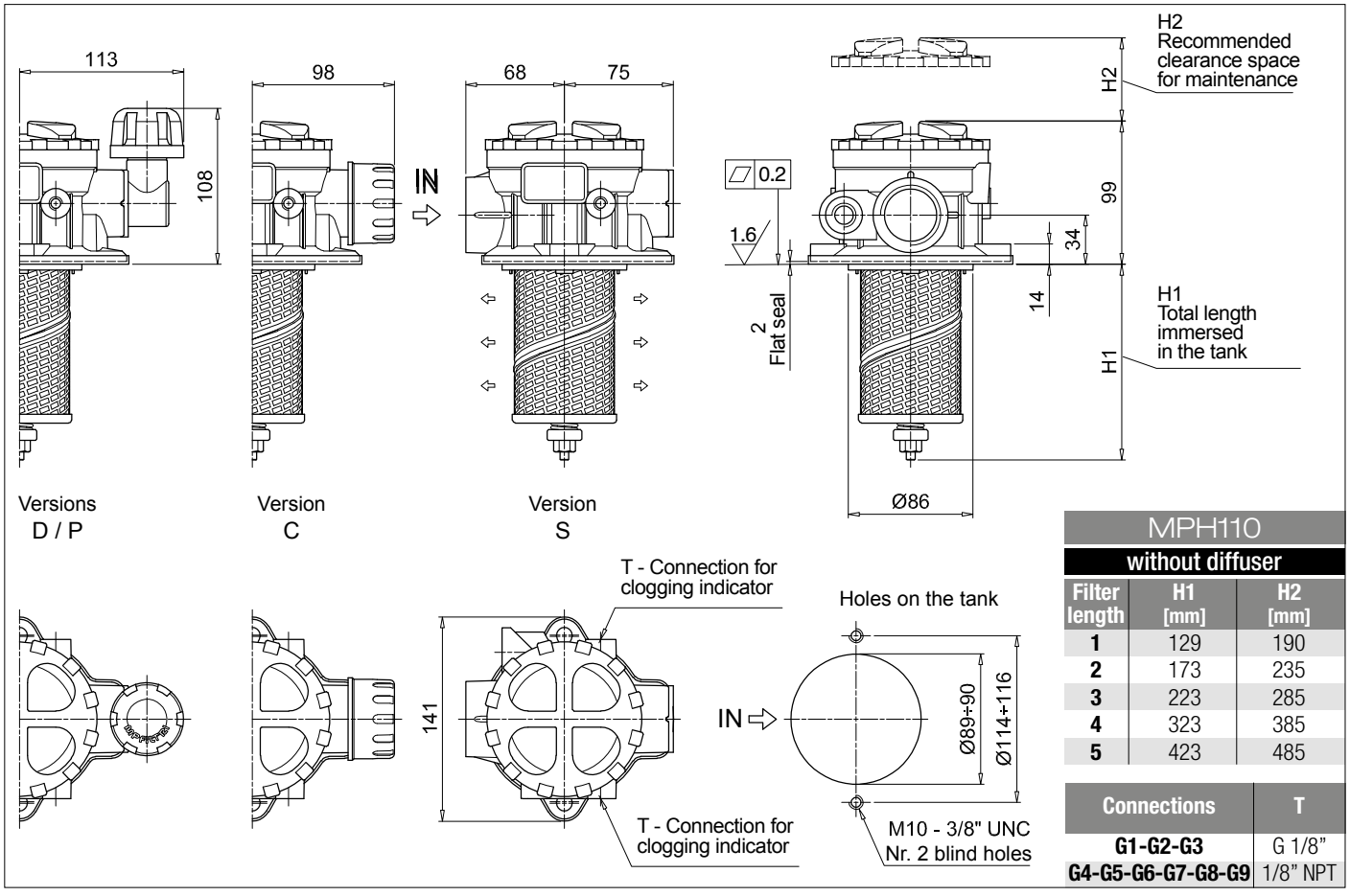

MPH110 without diffuser		
Filter length	H1 [mm]	H2 [mm]
1	129	190
2	173	235
3	223	285
4	323	385
5	423	485

Connections	T
G1-G2-G3	G 1/8"
G4-G5-G6-G7-G8-G9	1/8" NPT

Designation & Ordering code

COMPLETE FILTER

Configuration example: MPH114 | 3 | C | E | C | Z | G6 | M60 | P01

Series and size
MPH114

Length
1 | **2** | **3** | **4** | **5**

Bypass valve
S Without bypass
C 1.75 bar
E 2.5 bar

Diffuser and magnetic filter
D With diffuser, with magnetic filter
F With diffuser, without magnetic filter
O Without diffuser, with magnetic filter
E Without diffuser, without magnetic filter

Air breather
S Without air breather
C With air breather 10 µm
D With anti-splash and air breather SAP050 10 µm
P With anti-splash and air breather SAP050 10 µm pressurization 0.5 bar

Seals and treatments

		Filtration rating Axx	Mxx	Pxx
A	NBR	•	•	•
V	FPM	•	•	•
W	NBR head anodized	•	•	
Z	FPM head anodized	•	•	

filter element compatible with fluids HFA-HFB-HFC

Connections

G1	G 3/4”	**G6**	1 1/4” NPT
G2	G 1”	**G7**	SAE 12 - 1 1/16” - 12 UN
G3	G 1 1/4”	**G8**	SAE 16 - 1 5/16” - 12 UN
G4	3/4” NPT	**G9**	SAE 20 - 1 5/8” - 12 UN
G5	1” NPT		

Filtration rating (filter media)

A03	Inorganic microfiber 3 µm	**M25**	Wire mesh 25 µm
A06	Inorganic microfiber 6 µm	**M60**	Wire mesh 60 µm
A10	Inorganic microfiber 10 µm	**M90**	Wire mesh 90 µm
A16	Inorganic microfiber 16 µm	**P10**	Resin impregnated paper 10 µm
A25	Inorganic microfiber 25 µm	**P25**	Resin impregnated paper 25 µm

Execution
P01 MP Filtri standard
Pxx Customized

FILTER ELEMENT

Configuration example: MR100 | 3 | M60 | V | P01

Element series and size
MR100

Element length
1 | **2** | **3** | **4** | **5**

Filtration rating (filter media)

A03	Inorganic microfiber 3 µm	**M25**	Wire mesh 25 µm
A06	Inorganic microfiber 6 µm	**M60**	Wire mesh 60 µm
A10	Inorganic microfiber 10 µm	**M90**	Wire mesh 90 µm
A16	Inorganic microfiber 16 µm	**P10**	Resin impregnated paper 10 µm
A25	Inorganic microfiber 25 µm	**P25**	Resin impregnated paper 25 µm

Seals
A NBR
V FPM

Execution
P01 MP Filtri standard
Pxx Customized

ACCESSORIES

Indicators		page
BVA	Axial pressure gauge	240
BVR	Radial pressure gauge	240
BVP	Visual pressure indicator with automatic reset	241
BVQ	Visual pressure indicator with manual reset	241

Additional features		page
DPT	Dipstick	249

		page
BEA	Electrical pressure indicator	239
BEM	Electrical pressure indicator	239
BLA	Electrical / visual pressure indicator	239-240

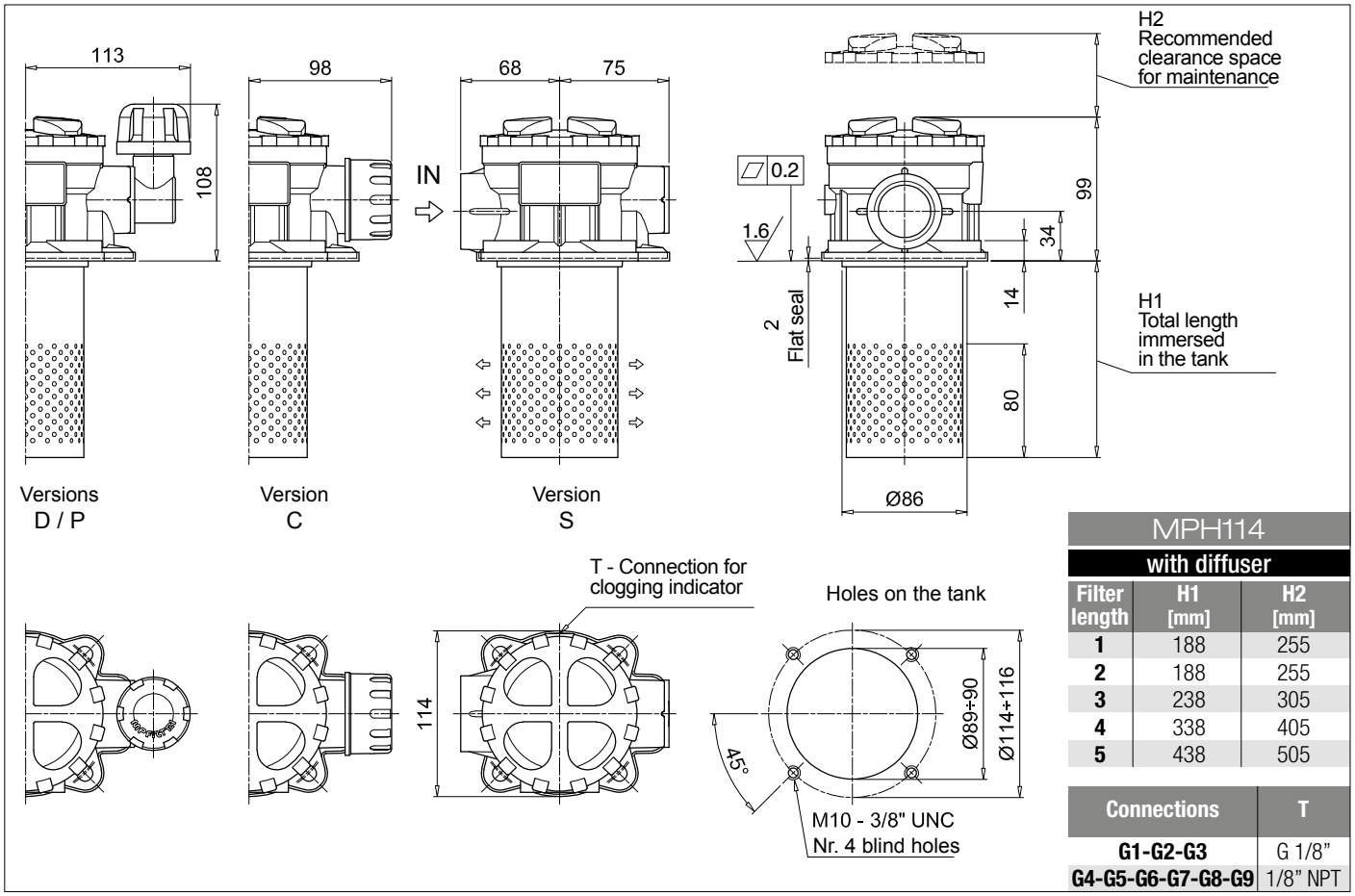

MPH114

with diffuser

Filter length	H1 [mm]	H2 [mm]
1	188	255
2	188	255
3	238	305
4	338	405
5	438	505

Connections	T
G1-G2-G3	G 1/8"
G4-G5-G6-G7-G8-G9	1/8" NPT

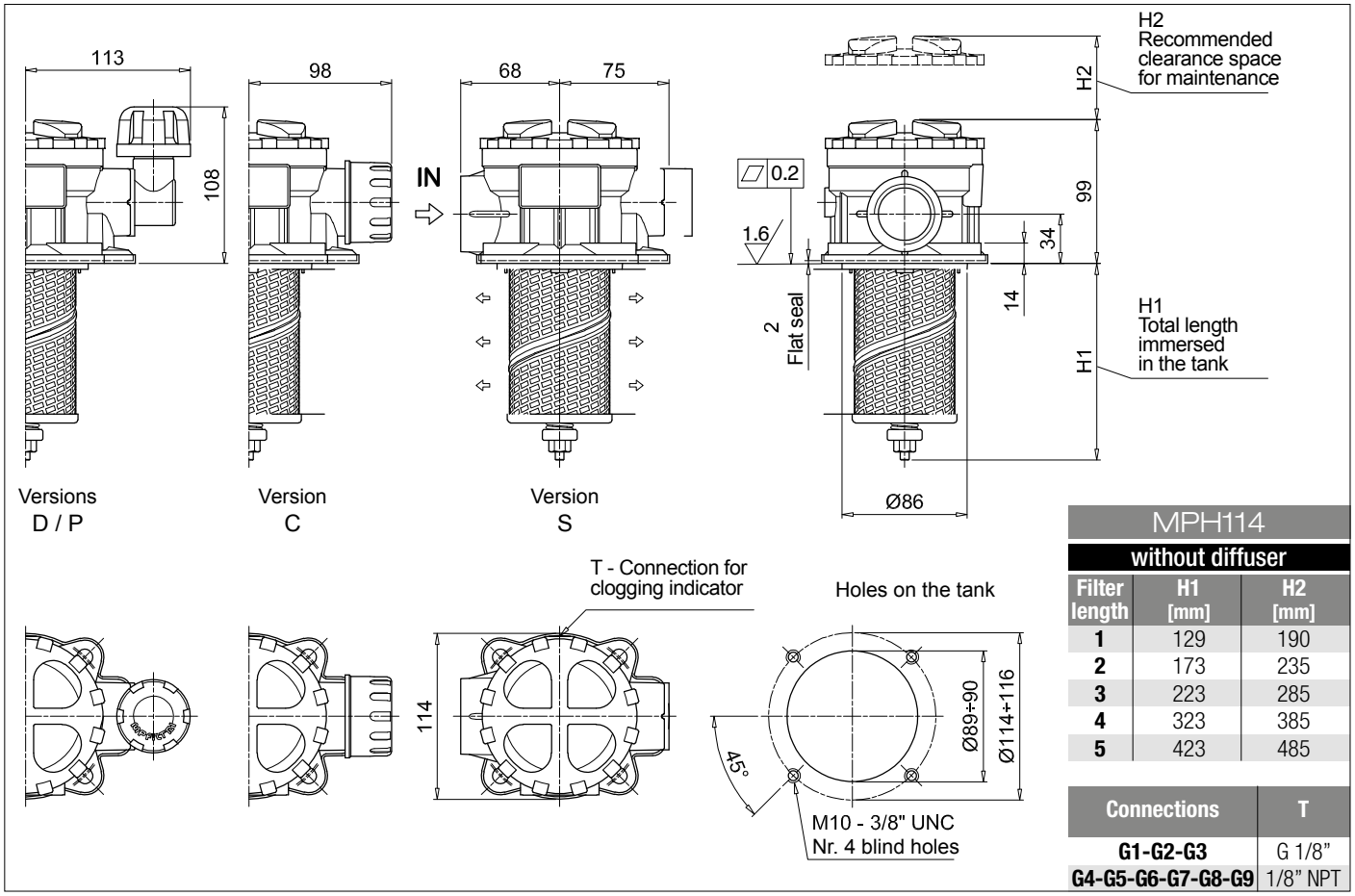

MPH114

without diffuser

Filter length	H1 [mm]	H2 [mm]
1	129	190
2	173	235
3	223	285
4	323	385
5	423	485

Connections	T
G1-G2-G3	G 1/8"
G4-G5-G6-G7-G8-G9	1/8" NPT

MPH MPH116

Designation & Ordering code

COMPLETE FILTER

Configuration example: MPH116 | 5 | S | D | S | A | G1 | A10 | P01

Series and size
MPH116

Length
1 | **2** | **3** | **4** | **5**

Bypass valve
S Without bypass
C 1.75 bar
E 2.5 bar

Diffuser and magnetic filter
D With diffuser, with magnetic filter
F With diffuser, without magnetic filter
O Without diffuser, with magnetic filter
E Without diffuser, without magnetic filter

Air breather
S Without air breather

Seals and treatments

		Filtration rating Axx	Mxx	Pxx
A	NBR	•	•	•
V	FPM	•	•	•
W	NBR head anodized	•	•	
Z	FPM head anodized	•	•	

filter element compatible with fluids HFA-HFB-HFC

Flat seal on the head on request

Connections

G1	G 3/4"	**G6**	1 1/4" NPT
G2	G 1"	**G7**	SAE 12 - 1 1/16" - 12 UN
G3	G 1 1/4"	**G8**	SAE 16 - 1 5/16" - 12 UN
G4	3/4" NPT	**G9**	SAE 20 - 1 5/8" - 12 UN
G5	1" NPT		

Filtration rating (filter media)

A03	Inorganic microfiber 3 µm	**M25**	Wire mesh 25 µm
A06	Inorganic microfiber 6 µm	**M60**	Wire mesh 60 µm
A10	Inorganic microfiber 10 µm	**M90**	Wire mesh 90 µm
A16	Inorganic microfiber 16 µm	**P10**	Resin impregnated paper 10 µm
A25	Inorganic microfiber 25 µm	**P25**	Resin impregnated paper 25 µm

Execution
P01 MP Filtri standard
Pxx Customized

FILTER ELEMENT

Configuration example: MR100 | 5 | A10 | A | P01

Element series and size
MR100

Element length
1 | **2** | **3** | **4** | **5**

Filtration rating (filter media)

A03	Inorganic microfiber 3 µm	**M25**	Wire mesh 25 µm
A06	Inorganic microfiber 6 µm	**M60**	Wire mesh 60 µm
A10	Inorganic microfiber 10 µm	**M90**	Wire mesh 90 µm
A16	Inorganic microfiber 16 µm	**P10**	Resin impregnated paper 10 µm
A25	Inorganic microfiber 25 µm	**P25**	Resin impregnated paper 25 µm

Seals
A NBR
V FPM

Execution
P01 MP Filtri standard
Pxx Customized

ACCESSORIES

Indicators		page
BVA	Axial pressure gauge	240
BVR	Radial pressure gauge	240
BVP	Visual pressure indicator with automatic reset	241
BVQ	Visual pressure indicator with manual reset	241

Additional features		page
DPT	Dipstick	249

		page
BEA	Electrical pressure indicator	239
BEM	Electrical pressure indicator	239
BLA	Electrical / visual pressure indicator	239-240

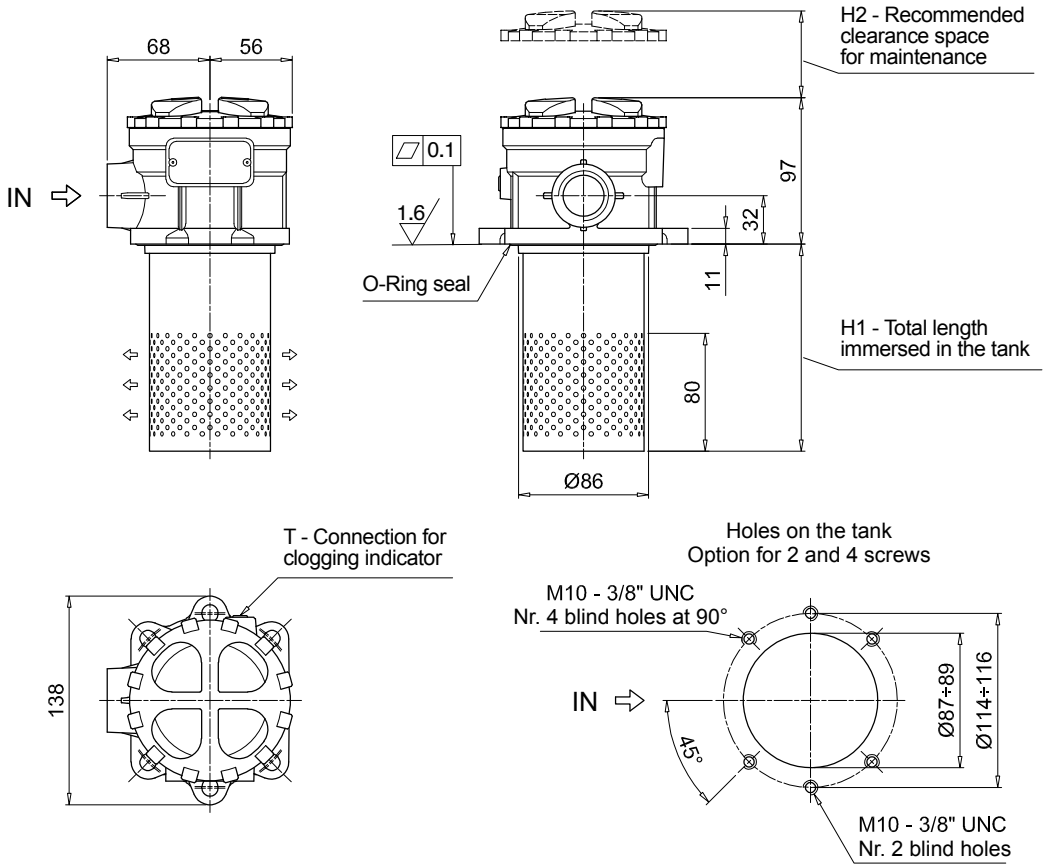

MPH116 with diffuser		
Filter length	**H1 [mm]**	**H2 [mm]**
1	190	255
2	190	255
3	240	305
4	340	405
5	440	505

Connections	T
G1-G2-G3	G 1/8"
G4-G5-G6-G7-G8-G9	1/8" NPT

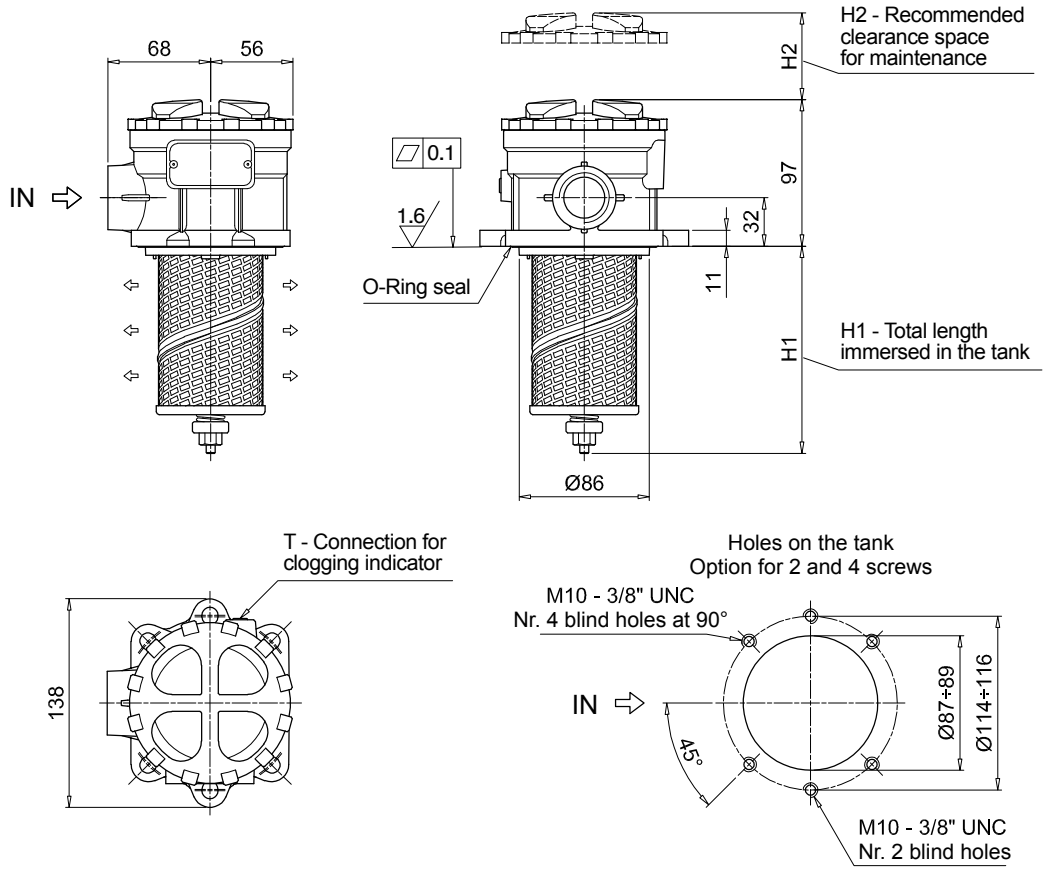

MPH116 without diffuser		
Filter length	**H1 [mm]**	**H2 [mm]**
1	131	190
2	175	235
3	225	285
4	325	385
5	425	485

Connections	T
G1-G2-G3	G 1/8"
G4-G5-G6-G7-G8-G9	1/8" NPT

MPH MPH120

Designation & Ordering code

COMPLETE FILTER

Configuration example: MPH120 | 1 | S | D | A | G1 | 1 | A10 | P01

Series and size
MPH120

Length
1 | **2** | **3** | **4** | **5**

Bypass valve
S Without bypass
C 1.75 bar
E 2.5 bar

Diffuser and magnetic filter
D With diffuser, with magnetic filter
F With diffuser, without magnetic filter
O Without diffuser, with magnetic filter
E Without diffuser, without magnetic filter

Seals and treatments		Filtration rating Axx	Mxx	Pxx
A	NBR	•	•	•
V	FPM	•	•	•
W	NBR head anodized	•	•	
Z	FPM head anodized	•	•	

filter element compatible with fluids HFA-HFB-HFC

Main Connections		Rear connections	Aux size 1	Aux size 2
G1	G 3/4”	G 3/4”	G 3/8”	G 1/2”
G2	G 1”	G 1”		
G3	G 1 1/4”	G 3/4”		
G4	3/4” NPT	3/4” NPT	3/8” NPT	1/2” NPT
G5	1” NPT	1” NPT		
G6	1 1/4” NPT	3/4” NPT		
G7	SAE 12 - 1 1/16” - 12 UN	SAE 12 - 1 1/16” - 12 UN	SAE 6 - 9/16” - 18 UNF	SAE 8 - 3/4” - 16 UNF
G8	SAE 16 - 1 5/16” - 12 UN	SAE 16 - 1 5/16” - 12 UN		
G9	SAE 20 - 1 5/8” - 12 UN	SAE 12 - 1 1/16” - 12 UN		

Aux connection - see previous table
0 Not machined
1 Aux size 1
2 Aux size 2

Filtration rating (filter media)
A03 Inorganic microfiber 3 µm
A06 Inorganic microfiber 6 µm
A10 Inorganic microfiber 10 µm
A16 Inorganic microfiber 16 µm
A25 Inorganic microfiber 25 µm
M25 Wire mesh 25 µm
M60 Wire mesh 60 µm
M90 Wire mesh 90 µm
P10 Resin impregnated paper 10 µm
P25 Resin impregnated paper 25 µm

Execution
P01 MP Filtri standard
Pxx Customized

FILTER ELEMENT

Configuration example: MR100 | 1 | A10 | A | P01

Element series and size
MR100

Element length
1 | **2** | **3** | **4** | **5**

Filtration rating (filter media)
A03 Inorganic microfiber 3 µm
A06 Inorganic microfiber 6 µm
A10 Inorganic microfiber 10 µm
A16 Inorganic microfiber 16 µm
A25 Inorganic microfiber 25 µm
M25 Wire mesh 25 µm
M60 Wire mesh 60 µm
M90 Wire mesh 90 µm
P10 Resin impregnated paper 10 µm
P25 Resin impregnated paper 25 µm

Seals
A NBR
V FPM

Execution
P01 MP Filtri standard
Pxx Customized

ACCESSORIES

Indicators		page
BVA	Axial pressure gauge	240
BVR	Radial pressure gauge	240
BVP	Visual pressure indicator with automatic reset	241
BVQ	Visual pressure indicator with manual reset	241

Additional features		page
DPT	Dipstick	249

		page
BEA	Electrical pressure indicator	239
BEM	Electrical pressure indicator	239
BLA	Electrical / visual pressure indicator	239-240

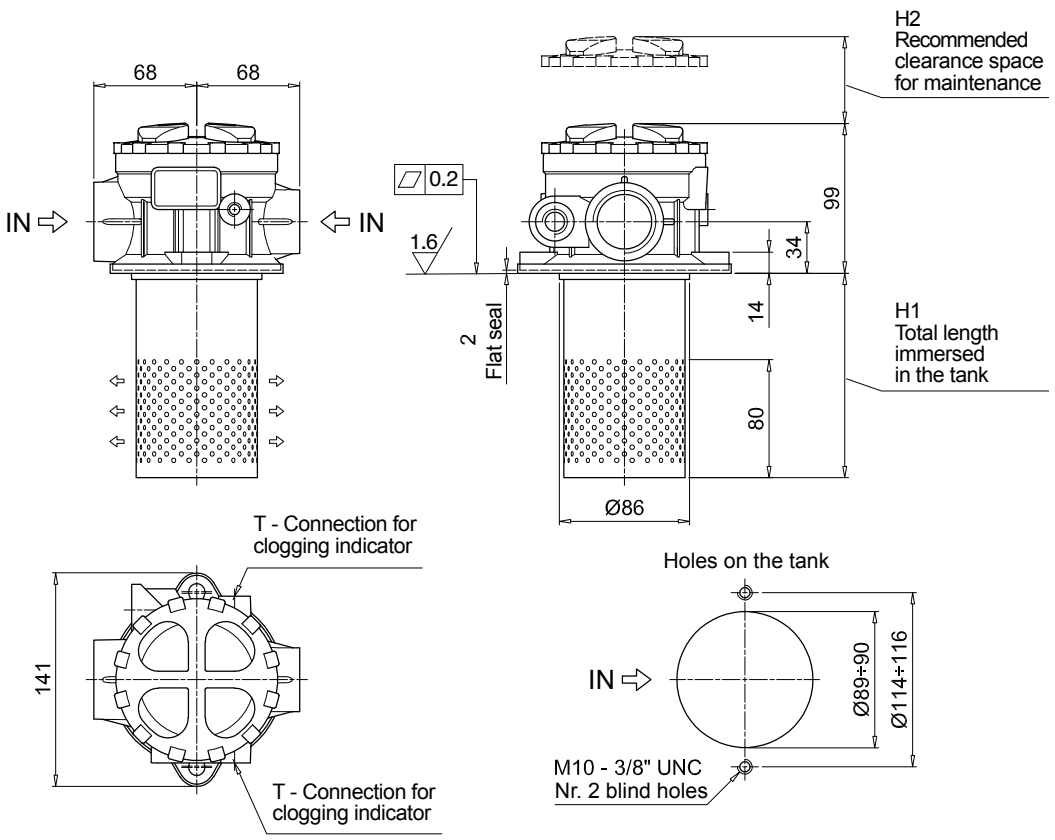

MPH120
with diffuser

Filter length	H1 [mm]	H2 [mm]
1	188	255
2	188	255
3	238	305
4	338	405
5	438	505

Connections	T
G1-G2-G3	G 1/8"
G4-G5-G6-G7-G8-G9	1/8" NPT

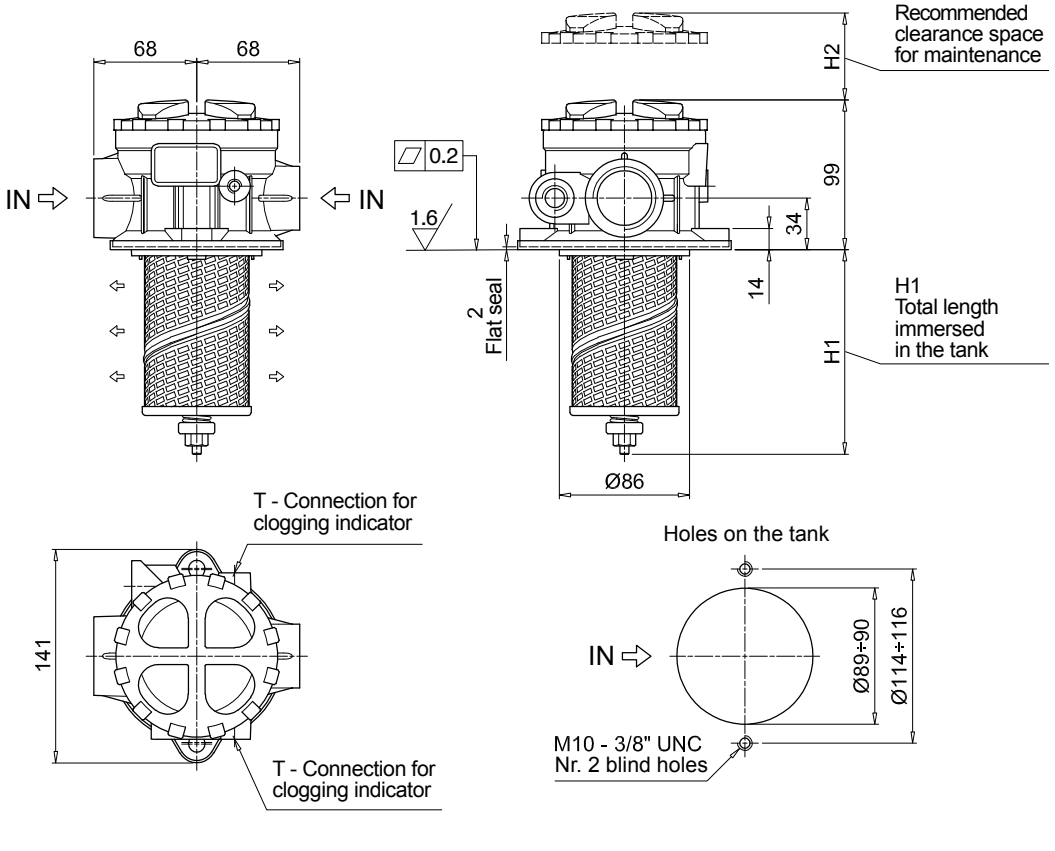

MPH120
without diffuser

Filter length	H1 [mm]	H2 [mm]
1	129	190
2	173	235
3	223	285
4	323	385
5	423	485

Connections	T
G1-G2-G3	G 1/8"
G4-G5-G6-G7-G8-G9	1/8" NPT

MPH MPH250

Designation & Ordering code

COMPLETE FILTER

Configuration example: MPH250 | 1 | C | D | S | A | G1 | A10 | P01

Series and size
MPH250

Length
1 | **2** | **3** | **4**

Bypass valve

S	Without bypass	**C**	1.75 bar	**E**	2.5 bar

Diffuser and magnetic filter

D	With diffuser, with magnetic filter
F	With diffuser, without magnetic filter
O	Without diffuser, with magnetic filter
E	Without diffuser, without magnetic filter

Air breather

S	Without air breather

Seals and treatments

		Filtration rating Axx	Mxx	Pxx
A	NBR	•	•	•
V	FPM	•	•	•
W	NBR head anodized	•	•	
Z	FPM head anodized	•	•	

filter element compatible with fluids HFA-HFB-HFC

Main Connections		Rear connections
G1	G 1 1/2"	-
G2	G 1 1/2"	G 1 1/4"
G4	1 1/2" NPT	-
G5	1 1/2" NPT	1 1/4" NPT
G7	SAE 24 - 1 7/8" - 12 UN	-
G8	SAE 24 - 1 7/8" - 12 UN	SAE 20 - 1 5/8" - 12 UN
F1	1 1/2" SAE 3000 psi/M	-
F2	1 1/2" SAE 3000 psi/M	1 1/4" SAE 3000 psi/M
F3	1 1/2" SAE 3000 psi/UNC	-
F4	1 1/2" SAE 3000 psi/UNC	1 1/4" SAE 3000 psi/UNC

Filtration rating (filter media)

A03	Inorganic microfiber 3 µm	**M25**	Wire mesh 25 µm
A06	Inorganic microfiber 6 µm	**M60**	Wire mesh 60 µm
A10	Inorganic microfiber 10 µm	**M90**	Wire mesh 90 µm
A16	Inorganic microfiber 16 µm	**P10**	Resin impregnated paper 10 µm
A25	Inorganic microfiber 25 µm	**P25**	Resin impregnated paper 25 µm

Execution

P01	MP Filtri standard
Pxx	Customized

FILTER ELEMENT

Configuration example: MR250 | 1 | A10 | A | P01

Element series and size
MR250

Element length
1 | **2** | **3** | **4**

Filtration rating (filter media)

A03	Inorganic microfiber 3 µm	**M25**	Wire mesh 25 µm
A06	Inorganic microfiber 6 µm	**M60**	Wire mesh 60 µm
A10	Inorganic microfiber 10 µm	**M90**	Wire mesh 90 µm
A16	Inorganic microfiber 16 µm	**P10**	Resin impregnated paper 10 µm
A25	Inorganic microfiber 25 µm	**P25**	Resin impregnated paper 25 µm

Seals

A	NBR
V	FPM

Execution

P01	MP Filtri standard
Pxx	Customized

ACCESSORIES

Indicators		page
BVA	Axial pressure gauge	240
BVR	Radial pressure gauge	240
BVP	Visual pressure indicator with automatic reset	241
BVQ	Visual pressure indicator with manual reset	241

		page
BEA	Electrical pressure indicator	239
BEM	Electrical pressure indicator	239
BLA	Electrical / visual pressure indicator	239-240

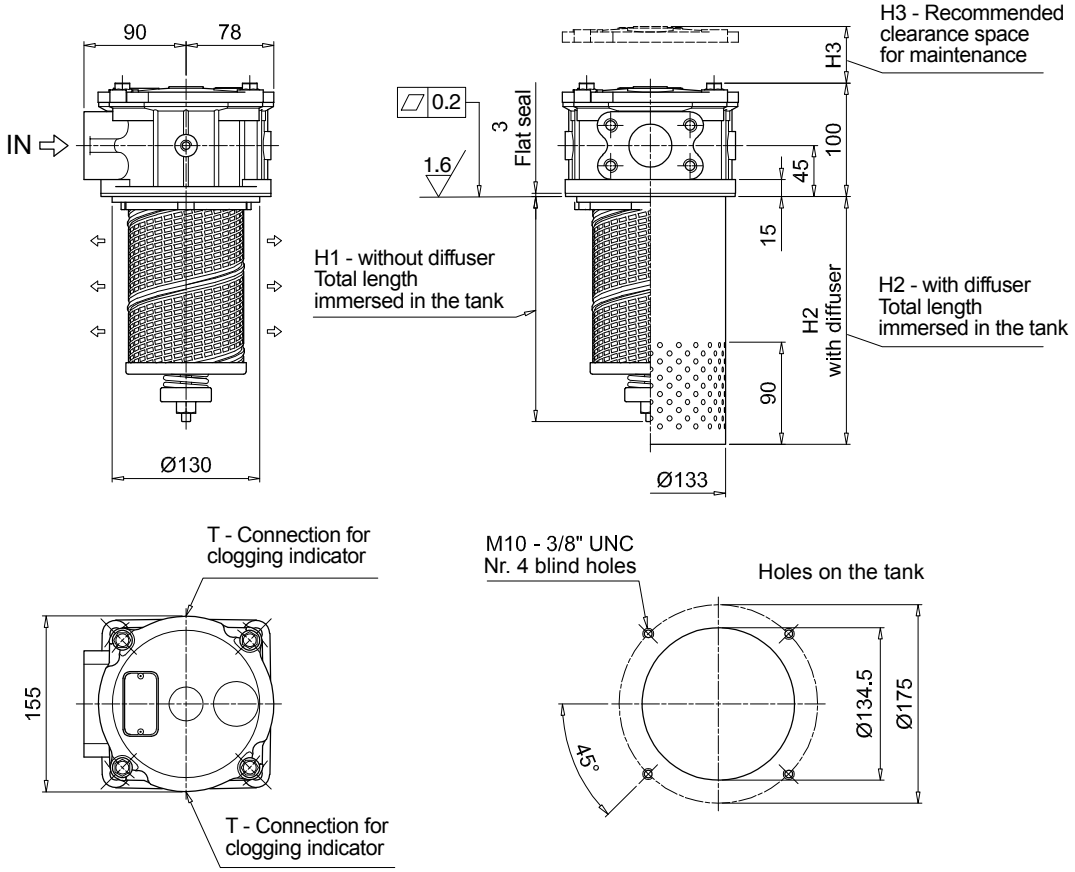

MPH250

1 connection port

Filter length	H1 [mm]	H2 [mm]	H3 [mm]
1	182	247	255
2	231	247	305
3	302	317	375
4	502	507	580

Connections	T
G1-G2-G3	G 1/8"
G4-G5-G6-G7-G8-G9	1/8" NPT
F1-F2	G 1/8"
F3-F4	1/8" NPT

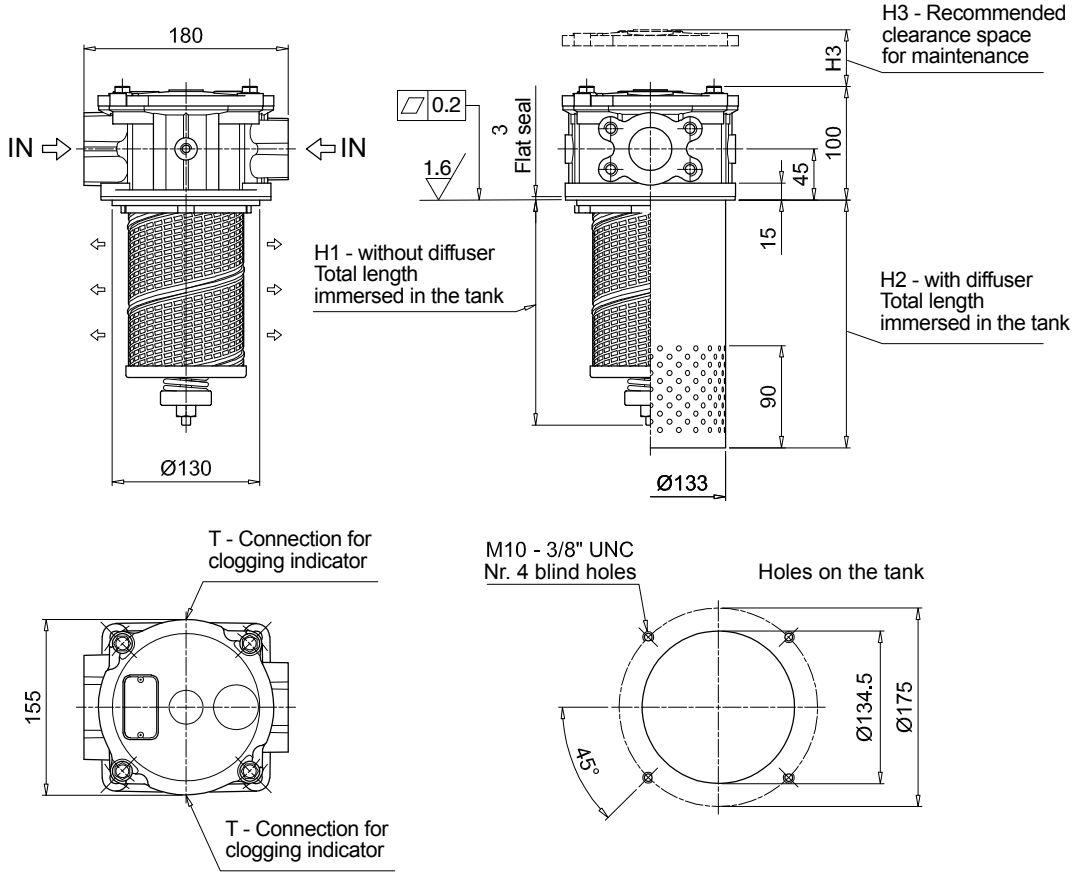

MPH250

2 connection ports

Filter length	H1 [mm]	H2 [mm]	H3 [mm]
1	182	247	255
2	231	247	305
3	302	317	375
4	502	507	580

Connections	T
G1-G2-G3	G 1/8"
G4-G5-G6-G7-G8-G9	1/8" NPT
F1-F2	G 1/8"
F3-F4	1/8" NPT

MPH MPH630

Designation & Ordering code

COMPLETE FILTER

Configuration example: MPH630 | 1 | S | E | S | W | F1 | M25 | P01

Series and size
MPH630

Length
1 | **2** | **3** | **4** | **5**

Bypass valve

S	Without bypass	**C**	1.75 bar	**E**	2.5 bar

Diffuser and magnetic filter

D	With diffuser, with magnetic filter
F	With diffuser, without magnetic filter
O	Without diffuser, with magnetic filter
E	Without diffuser, without magnetic filter

Air breather

S	Without air breather

Seals and treatments

			Filtration rating Axx	Mxx	Pxx
A	NBR		•	•	•
V	FPM		•	•	•
W	NBR	head anodized	•	•	
Z	FPM	head anodized	•	•	

filter element compatible with fluids HFA-HFB-HFC

Main Connections		Rear connections
F1	2 1/2" SAE 3000 psi/M	-
F2	2 1/2" SAE 3000 psi/M	2" SAE 3000 psi/M
F3	2 1/2" SAE 3000 psi/UNC	-
F4	2 1/2" SAE 3000 psi/UNC	2" SAE 3000 psi/UNC

Filtration rating (filter media)

A03	Inorganic microfiber 3 µm	**M25**	Wire mesh 25 µm
A06	Inorganic microfiber 6 µm	**M60**	Wire mesh 60 µm
A10	Inorganic microfiber 10 µm	**M90**	Wire mesh 90 µm
A16	Inorganic microfiber 16 µm	**P10**	Resin impregnated paper 10 µm
A25	Inorganic microfiber 25 µm	**P25**	Resin impregnated paper 25 µm

Execution

P01	MP Filtri standard
Pxx	Customized

FILTER ELEMENT

Configuration example: MR630 | 1 | M25 | A | P01

Element series and size
MR630

Element length
1 | **2** | **3** | **4** | **5**

Filtration rating (filter media)

A03	Inorganic microfiber 3 µm	**M25**	Wire mesh 25 µm
A06	Inorganic microfiber 6 µm	**M60**	Wire mesh 60 µm
A10	Inorganic microfiber 10 µm	**M90**	Wire mesh 90 µm
A16	Inorganic microfiber 16 µm	**P10**	Resin impregnated paper 10 µm
A25	Inorganic microfiber 25 µm	**P25**	Resin impregnated paper 25 µm

Seals

A	NBR
V	FPM

Execution

P01	MP Filtri standard
Pxx	Customized

ACCESSORIES

Indicators		page
BVA	Axial pressure gauge	240
BVR	Radial pressure gauge	240
BVP	Visual pressure indicator with automatic reset	241
BVQ	Visual pressure indicator with manual reset	241

		page
BEA	Electrical pressure indicator	239
BEM	Electrical pressure indicator	239
BLA	Electrical / visual pressure indicator	239-240

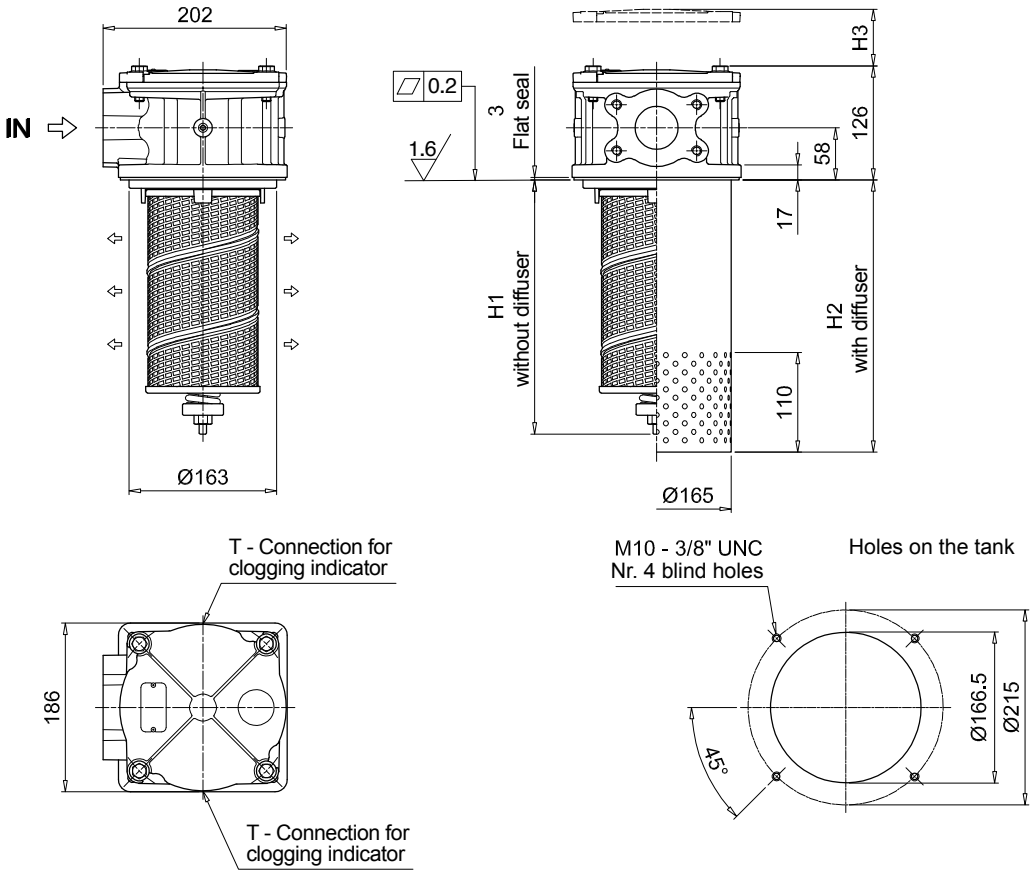

MPH630			
1 connection port			
Filter length	**H1 [mm]**	**H2 [mm]**	**H3 [mm]**
1	260	278	330
2	340	358	410
3	440	458	510
4	528	548	600
5	829	848	900

Connections	T
F1	G 1/8"
F3	1/8" NPT

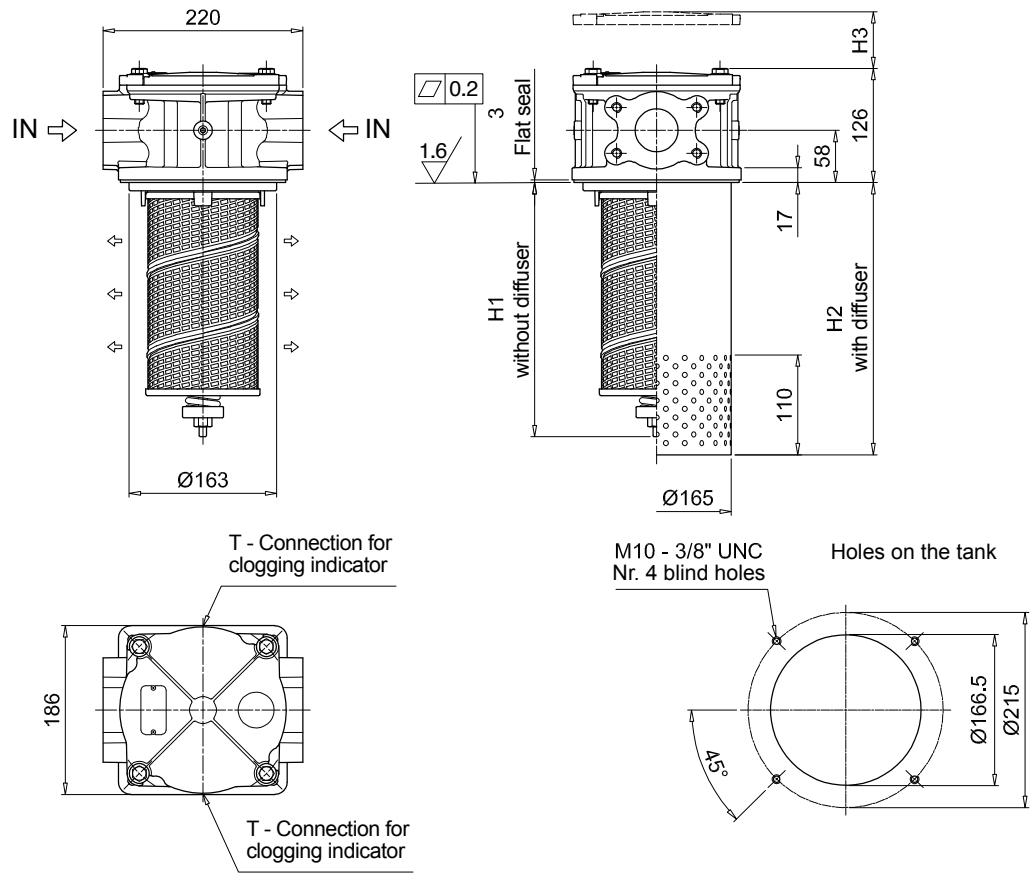

MPH630			
2 connection ports			
Filter length	**H1 [mm]**	**H2 [mm]**	**H3 [mm]**
1	260	278	330
2	340	358	410
3	440	458	510
4	528	548	600
5	829	848	900

Connections	T
F2	G 1/8"
F4	1/8" NPT

MPH MPH660

Designation & Ordering code

COMPLETE FILTER

Configuration example: MPH660 | 4 | C | D | S | A | F2 | A10 | P01

Series and size
MPH660

Length
4 | **5**

Bypass valve
S Without bypass
C 1.75 bar
E 2.5 bar

Diffuser and magnetic filter
D With diffuser, with magnetic filter
F With diffuser, without magnetic filter
O Without diffuser, with magnetic filter
E Without diffuser, without magnetic filter

Air breather
S Without air breather

Seals and treatments

		Filtration rating Axx	Mxx	Pxx
A	NBR	•	•	•
V	FPM	•	•	•
W	NBR head anodized	•	•	
Z	FPM head anodized	•	•	

filter element compatible with fluids HFA-HFB-HFC

Main Connections
F1 3" SAE 3000 psi/M
F2 4" SAE 3000 psi/M

Filtration rating (filter media)

A03	Inorganic microfiber 3 µm	**M25**	Wire mesh 25 µm
A06	Inorganic microfiber 6 µm	**M60**	Wire mesh 60 µm
A10	Inorganic microfiber 10 µm	**M90**	Wire mesh 90 µm
A16	Inorganic microfiber 16 µm	**P10**	Resin impregnated paper 10 µm
A25	Inorganic microfiber 25 µm	**P25**	Resin impregnated paper 25 µm

Execution
P01 MP Filtri standard
Pxx Customized

FILTER ELEMENT

Configuration example: MR630 | 5 | M25 | A | P01

Element series and size
MR630

Element length
4 | **5**

Filtration rating (filter media)

A03	Inorganic microfiber 3 µm	**M25**	Wire mesh 25 µm
A06	Inorganic microfiber 6 µm	**M60**	Wire mesh 60 µm
A10	Inorganic microfiber 10 µm	**M90**	Wire mesh 90 µm
A16	Inorganic microfiber 16 µm	**P10**	Resin impregnated paper 10 µm
A25	Inorganic microfiber 25 µm	**P25**	Resin impregnated paper 25 µm

Seals
A NBR
V FPM

Execution
P01 MP Filtri standard
Pxx Customized

ACCESSORIES

Indicators		page
BVA	Axial pressure gauge	240
BVR	Radial pressure gauge	240
BVP	Visual pressure indicator with automatic reset	241
BVQ	Visual pressure indicator with manual reset	241

		page
BEA	Electrical pressure indicator	239
BEM	Electrical pressure indicator	239
BLA	Electrical / visual pressure indicator	239-240

Dimensions

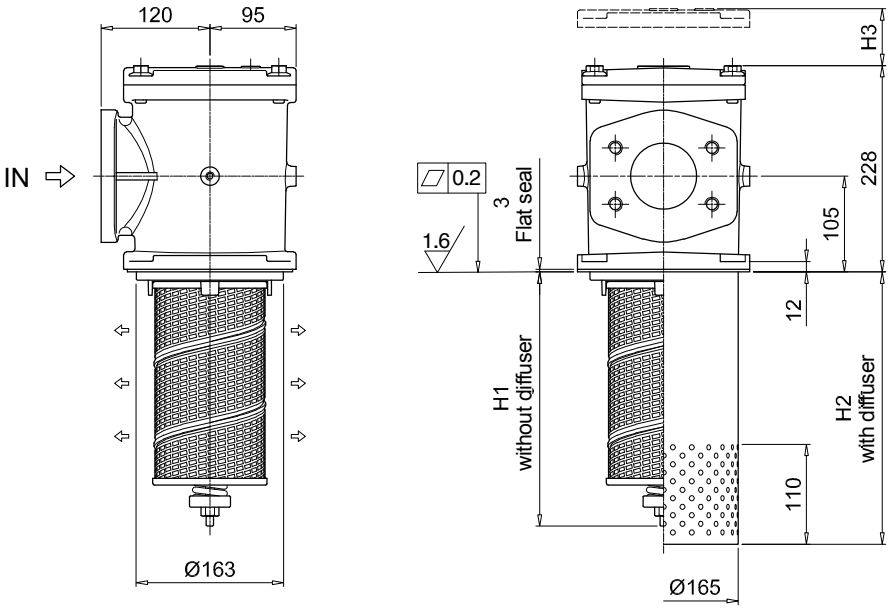

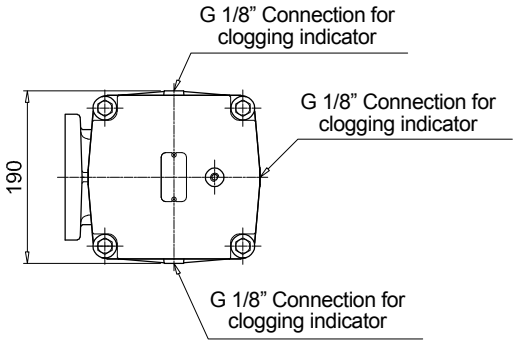

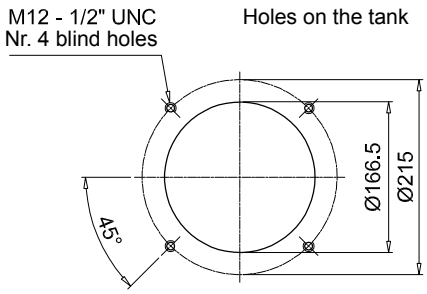

MPH660

Filter length	H1 [mm]	H2 [mm]	H3 [mm]
4	538	548	610
5	838	848	910

MPH MPH850

Designation & Ordering code

COMPLETE FILTER

Configuration example: MPH850 | 1 | C | D | S | A | F1 | A10 | P01

Series and size
MPH850

Length
1 | **2** | **3** | **4**

Bypass valve

S	Without bypass	**C**	1.75 bar

Diffuser and magnetic filter

D	With diffuser, with magnetic filter
F	With diffuser, without magnetic filter
O	Without diffuser, with magnetic filter
E	Without diffuser, without magnetic filter

Air breather

S	Without air breather

Seals and treatments

			Filtration rating Axx	Mxx	Pxx
A	NBR		•	•	•
V	FPM		•	•	•
W	NBR head anodized	filter element compatible with fluids HFA-HFB-HFC	•	•	
Z	FPM head anodized		•	•	

Main Connections		Rear connections
F1	UNI 2223 DN 100 PN 10/16	3” SAE 3000 psi/M
F2	UNI 2223 DN 100 PN 10/16	3” SAE 3000 psi/UNC
F5	Not machined	3” SAE 3000 psi/M
F6	Not machined	3” SAE 3000 psi/UNC
F7	4” SAE 3000 psi/M	3” SAE 3000 psi/M
F8	4” SAE 3000 psi/UNC	3” SAE 3000 psi/UNC

Filtration rating (filter media)

A03	Inorganic microfiber 3 µm	**M25**	Wire mesh 25 µm
A06	Inorganic microfiber 6 µm	**M60**	Wire mesh 60 µm
A10	Inorganic microfiber 10 µm	**M90**	Wire mesh 90 µm
A16	Inorganic microfiber 16 µm	**P10**	Resin impregnated paper 10 µm
A25	Inorganic microfiber 25 µm	**P25**	Resin impregnated paper 25 µm

Execution

P01	MP Filtri standard
Pxx	Customized

FILTER ELEMENT

Configuration example: MR850 | 1 | A10 | A | P01

Element series and size
MR850

Element length
1 | **2** | **3** | **4**

Filtration rating (filter media)

A03	Inorganic microfiber 3 µm	**M25**	Wire mesh 25 µm
A06	Inorganic microfiber 6 µm	**M60**	Wire mesh 60 µm
A10	Inorganic microfiber 10 µm	**M90**	Wire mesh 90 µm
A16	Inorganic microfiber 16 µm	**P10**	Resin impregnated paper 10 µm
A25	Inorganic microfiber 25 µm	**P25**	Resin impregnated paper 25 µm

Seals

A	NBR
V	FPM

Execution

P01	MP Filtri standard
Pxx	Customized

ACCESSORIES

Indicators		page
BVA	Axial pressure gauge	240
BVR	Radial pressure gauge	240
BVP	Visual pressure indicator with automatic reset	241
BVQ	Visual pressure indicator with manual reset	241

		page
BEA	Electrical pressure indicator	239
BEM	Electrical pressure indicator	239
BLA	Electrical / visual pressure indicator	239-240

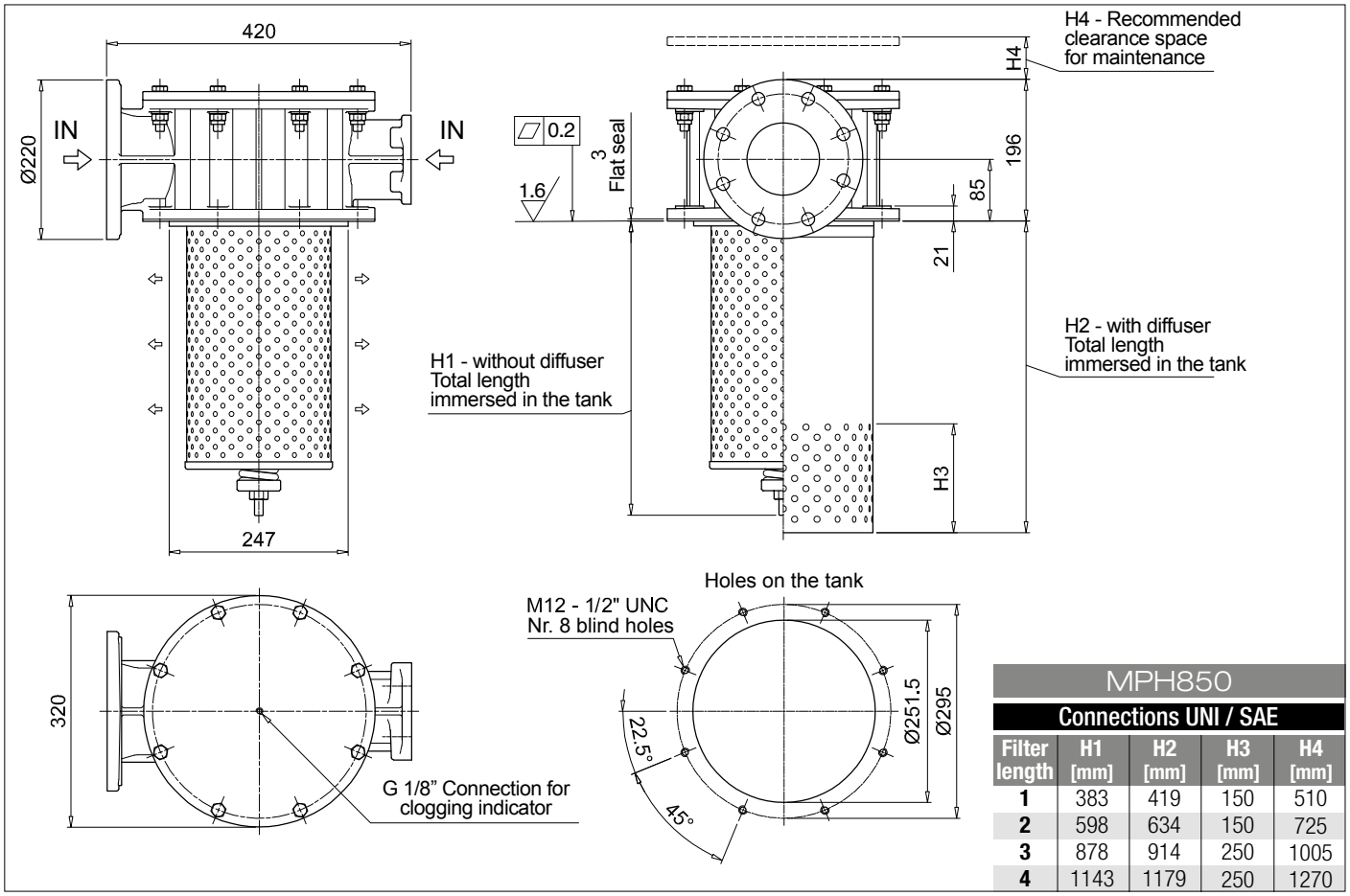

MPH850

Connections UNI / SAE

Filter length	H1 [mm]	H2 [mm]	H3 [mm]	H4 [mm]
1	383	419	150	510
2	598	634	150	725
3	878	914	250	1005
4	1143	1179	250	1270

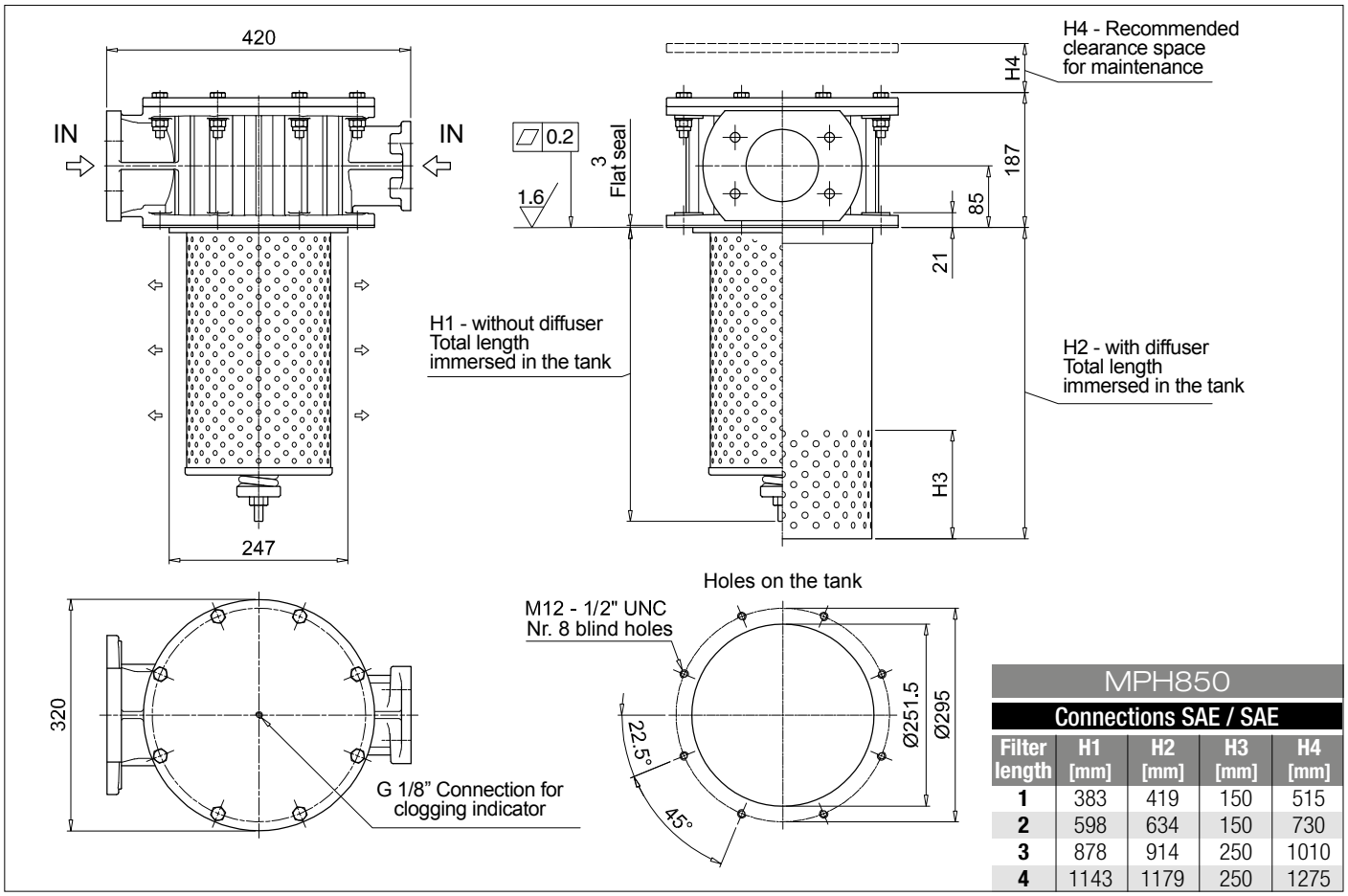

MPH850

Connections SAE / SAE

Filter length	H1 [mm]	H2 [mm]	H3 [mm]	H4 [mm]
1	383	419	150	515
2	598	634	150	730
3	878	914	250	1010
4	1143	1179	250	1275

Order number for spare parts

MPH 110 - 114

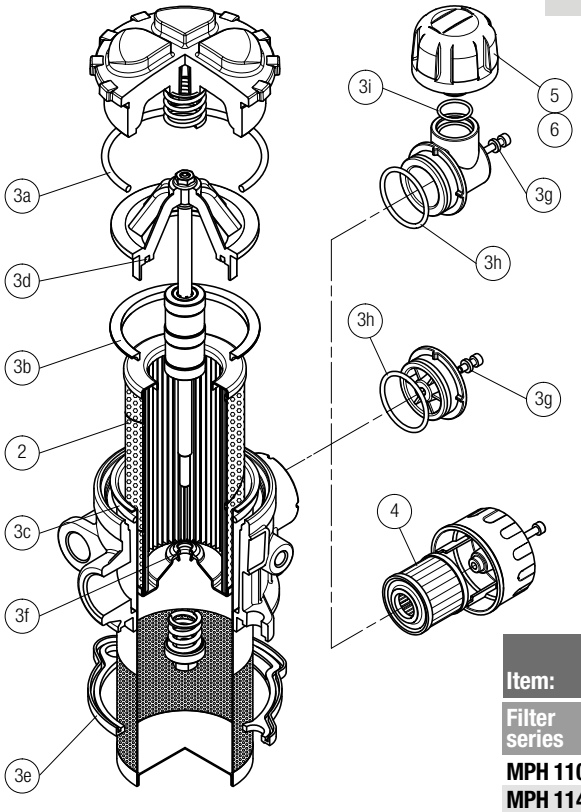

Item:	Q.ty: 1 pc. 2	Q.ty: 1 pc. 3 (3a ÷ 3i)		Q.ty: 1 pc. 4	Q.ty: 1 pc. 5	Q.ty: 1 pc. 6
Filter series	Filter element	Seal Kit code number NBR	FPM	Air breather filter element - version: C	D	P
MPH 110	See order table	02050565	02050566	10 µm A3L03	10 µm SAP50G3L03A0P01	10 µm SAP50G3L03A1P01
MPH 114		02050582	02050583			

MPH 116

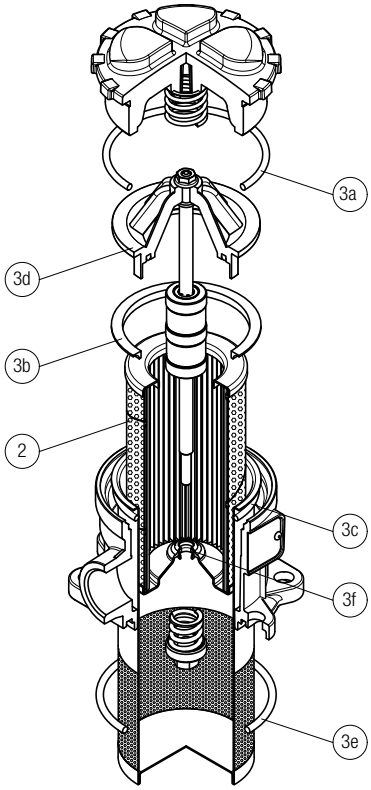

Item:	Q.ty: 1 pc. 2	Q.ty: 1 pc. 3 (3a ÷ 3f)	
Filter series	Filter element	Seal Kit code number NBR	FPM
MPH 116	See order table	02050741	02050742

MPH 120

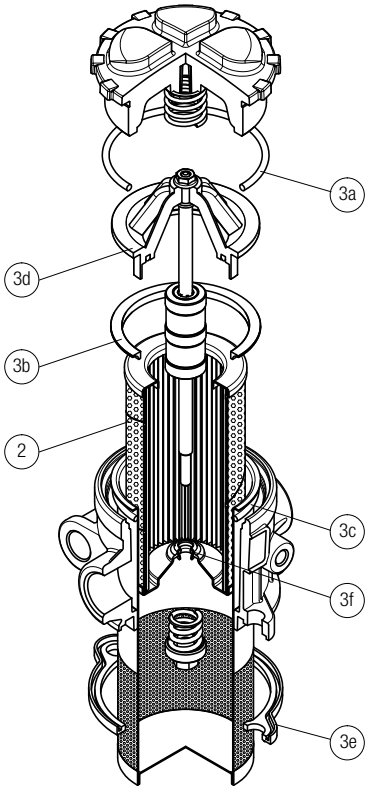

Item:	Q.ty: 1 pc. 2	Q.ty: 1 pc. 3 (3a ÷ 3f)	
Filter series	Filter element	Seal Kit code number NBR	FPM
MPH 120	See order table	02050567	02050568

Order number for spare parts

MPH 250 - 630

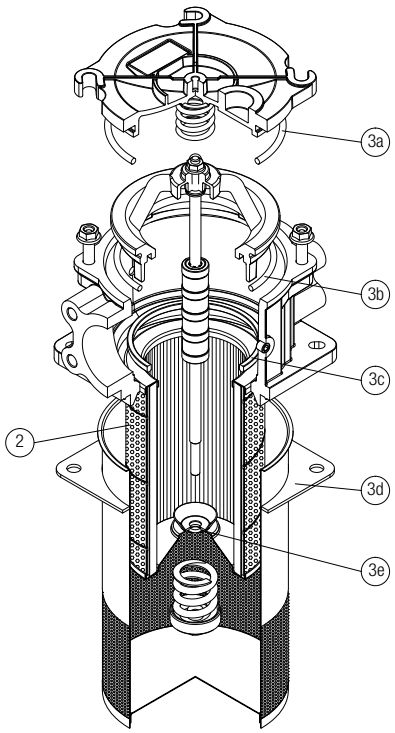

Item:	Q.ty: 1 pc. 2	Q.ty: 1 pc. 3 (3a ÷ 3e)	
Filter series	Filter element	Seal Kit code number NBR	FPM
MPH 250	See order table	02050151	02050152
MPH 630		02050153	02050154

MPH 660

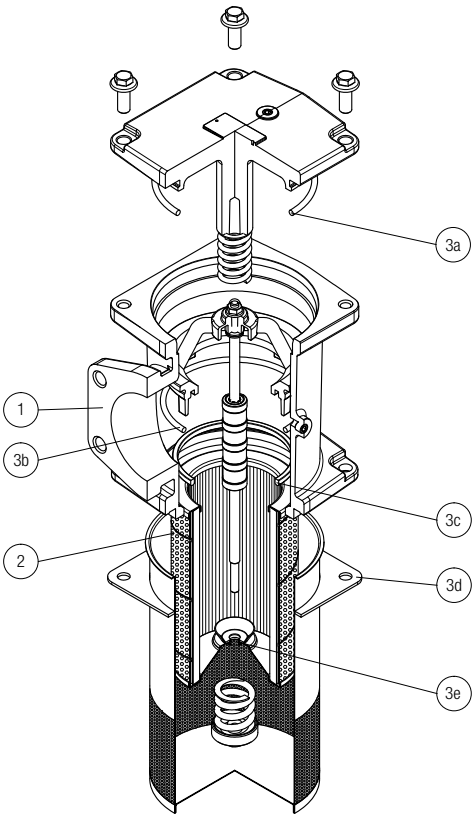

MPH 850

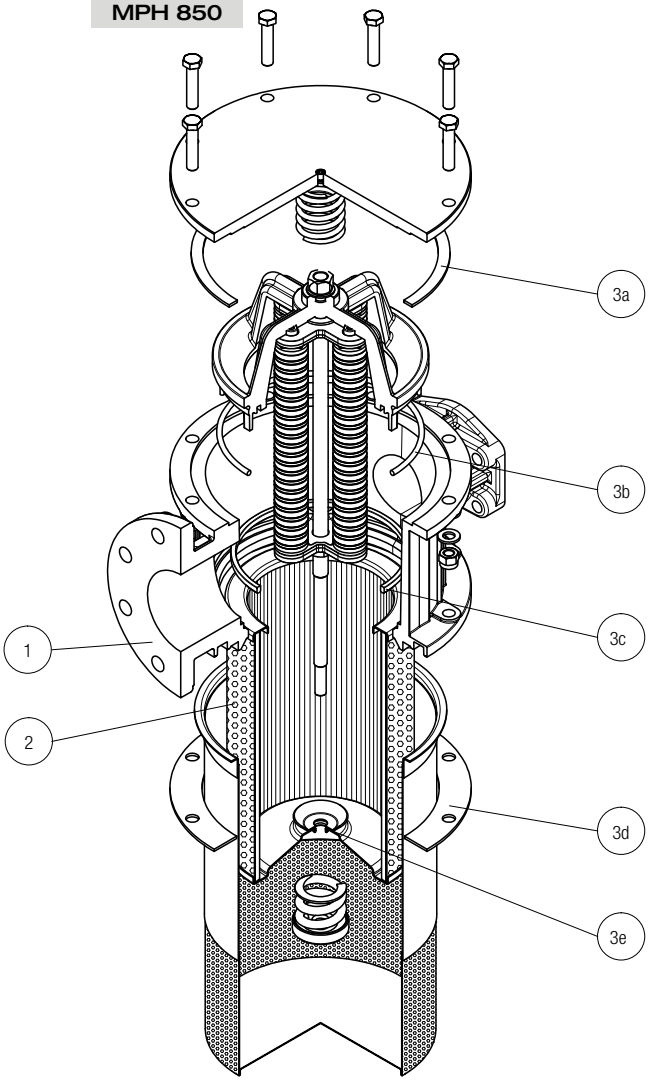

Item:	Q.ty: 1 pc. 2	Q.ty: 1 pc. 3 (3a ÷ 3e)	
Filter series	Filter element	Seal Kit code number NBR	FPM
MPH 660	See order table	02050153	02050154
MPH 850		02050155	02050156

MPI series

Maximum working pressure up to 1 MPa (10 bar) - Flow rate up to 3500 l/min



Description

Return filter

Maximum working pressure up to 1 MPa (10 bar)
Flow rate up to 3500 l/min

MPI is a range of return filter kits for protection of the reservoir against the system contamination.
They are directly integrated in the reservoir in immersed or semi-immersed position to save space into the tank.
The use of the diffuser is recommended, to place the filter output always immersed into the fluid to avoid aeration or foam generation into the reservoir.
The filtration from inside to outside allows a cleaner filter element replacement, the dirty remains into the filter element.

Available features:
- Fine filtration rating, to get a good cleanliness level into the reservoir
- Bypass valve, to relieve excessive pressure drop across the filter media
- Magnetic filter, to hold the ferrous particles
- Oil dipstick, to easily check the level of the fluid into the reservoir (separate item)
- Diffuser, to reduce the risk of aeration, foaming and noise

Common applications:
Heavy duty industrial equipment

Technical data

Filter housing materials
- Insert assembly
  Polyamide, GF reinforced: MPI 100
  Aluminium: MPI 250-630-850
- Diffuser: Tinned Steel
- Valve: Steel

Bypass valve
- Opening pressure 175 kPa (1.75 bar) ±10%
- Opening pressure 250 kPa (2.5 bar) ±10%, except for MPI 850

Δp element type
- Microfibre filter elements - series MR: 10 bar
- Fluid flow through the filter element from IN to OUT

Seals
- Standard NBR series A
- Optional FPM series V

Temperature
From -25 °C to +110 °C

Note
MPI filters are provided for vertical mounting



Weights [kg] and volumes [dm³]

Filter series	Weights [kg]						Volumes [dm³]					
	Length	1	2	3	4	5	Length	1	2	3	4	5
MPI 100		0.90	1.00	1.20	1.50	1.80		0.90	0.90	1.20	1.60	1.80
MPI 250		2.20	2.50	2.90	4.30	-		3.50	3.50	4.50	7.00	-
MPI 630		3.40	3.90	4.30	5.40	6.60		5.80	7.40	9.50	11.40	13.50
MPI 850		15.20	18.20	21.20	25.20	-		8.80	12.20	16.70	20.80	-

FILTER ASSEMBLY SIZING
Flow rates [l/min]

Filters series	Length	A03	A06	A10	A16	A25	M25 M60 M90	P10	P25
MPI 100	1	26	29	72	79	107	282	164	190
	2	43	46	112	114	161	318	164	190
	3	64	72	132	156	178	324	219	251
	4	90	99	184	198	216	324	266	302
	5	117	128	201	219	244	324	282	318
MPI 250	1	93	102	210	251	315	1093	339	383
	2	124	151	327	412	421	1122	460	514
	3	189	221	418	445	500	1137	544	616
	4	261	304	592	670	766	1166	832	923
MPI 630	1	160	200	369	423	518	1894	565	632
	2	240	257	571	611	1045	1929	1137	1285
	3	330	374	745	788	1308	1938	1416	1577
	4	374	403	887	1010	1348	1956	1448	1612
	5	625	698	1210	1257	1723	2121	1839	1929
MPI 850	1	775	1041	1246	1568	2242	3311	2371	2625
	2	1176	1522	1682	1747	2449	3378	2684	2886
	3	1490	1914	1995	2014	3035	3405	3144	3220
	4	1668	2088	2305	2363	3169	3517	3272	3378

Maximum flow rate for a complete return filter with a pressure drop Δp = 0.5 bar.
The reference fluid has a kinematic viscosity of 30 mm^2/s (cSt) and a density of 0.86 kg/dm^3.
For different pressure drop or fluid viscosity we recommend to use our selection software available on www.mpfiltri.com.
You can also calculate the right size using the formulas present on the FILTER SIZING paragraph at the beginning of the full catalogue or at the beginning of the filter family brochure.
Please, contact our Sales Department for further additional information.

Hydraulic symbol

Filter series	Style 1 connection
MPI 100	•
MPI 250	•
MPI 630	•
MPI 850	•

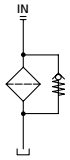

Designation & Ordering code

COMPLETE FILTER

Configuration example 1: MPI100 | 1 | C | D | A | A10 | P01
Configuration example 2: MPI630 | 5 | E | D | Z | M25 | P01

Series and size
- **MPI100**
- **MPI250**
- **MPI630**
- **MPI850**

Length	MPI100	MPI250	MPI630	MPI850
1	•	•	•	•
2	•	•	•	•
3	•	•	•	•
4	•	•	•	•
5	•		•	

Bypass valve	MPI100	MPI250	MPI630	MPI850
S Without	•	•	•	•
C 1.75 bar	•	•	•	•
E 2.5 bar	•	•	•	

Diffuser and magnetic filter
- **D** With diffuser, with magnetic filter
- **F** With diffuser, without magnetic filter
- **O** Without diffuser, with magnetic filter
- **E** Without diffuser, without magnetic filter

Seals and treatments		Filtration rating Axx	Mxx	Pxx
A	NBR	•	•	•
V	FPM	•	•	•
W	NBR head anodized	•	•	
Z	FPM head anodized	•	•	

filter element compatible with fluids HFA-HFB-HFC

Filtration rating (filter media)

A03	Inorganic microfiber 3 µm	**M25**	Wire mesh 25 µm
A06	Inorganic microfiber 6 µm	**M60**	Wire mesh 60 µm
A10	Inorganic microfiber 10 µm	**M90**	Wire mesh 90 µm
A16	Inorganic microfiber 16 µm	**P10**	Resin impregnated paper 10 µm
A25	Inorganic microfiber 25 µm	**P25**	Resin impregnated paper 25 µm

Execution
- **P01** MP Filtri standard
- **Pxx** Customized

FILTER ELEMENT

Configuration example 1: MR100 | 1 | A10 | A | P01
Configuration example 2: MR630 | 5 | M25 | V | P01

Element series and size
- **MR100**
- **MR250**
- **MR630**
- **MR850**

Element length	Size 100	Size 250	Size 630	Size 850
1	•	•	•	•
2	•	•	•	•
3	•	•	•	•
4	•	•	•	•
5	•		•	

Filtration rating (filter media)

A03	Inorganic microfiber 3 µm	**M25**	Wire mesh 25 µm
A06	Inorganic microfiber 6 µm	**M60**	Wire mesh 60 µm
A10	Inorganic microfiber 10 µm	**M90**	Wire mesh 90 µm
A16	Inorganic microfiber 16 µm	**P10**	Resin impregnated paper 10 µm
A25	Inorganic microfiber 25 µm	**P25**	Resin impregnated paper 25 µm

Seals
- **A** NBR
- **V** FPM

Execution
- **P01** MP Filtri standard
- **Pxx** Customized

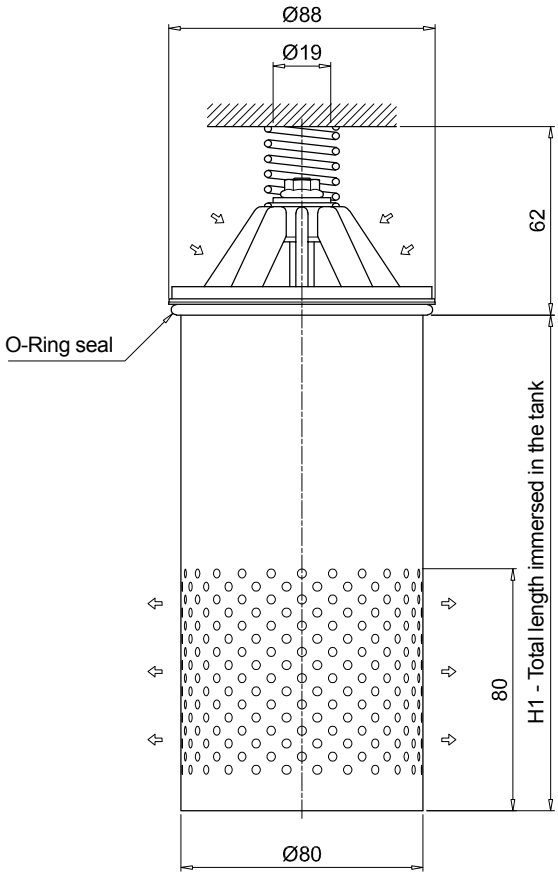

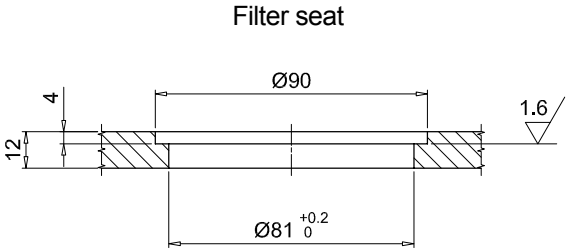

MPI100 with diffuser	
Filter length	H1 [mm]
1	198
2	198
3	248
4	348
5	448

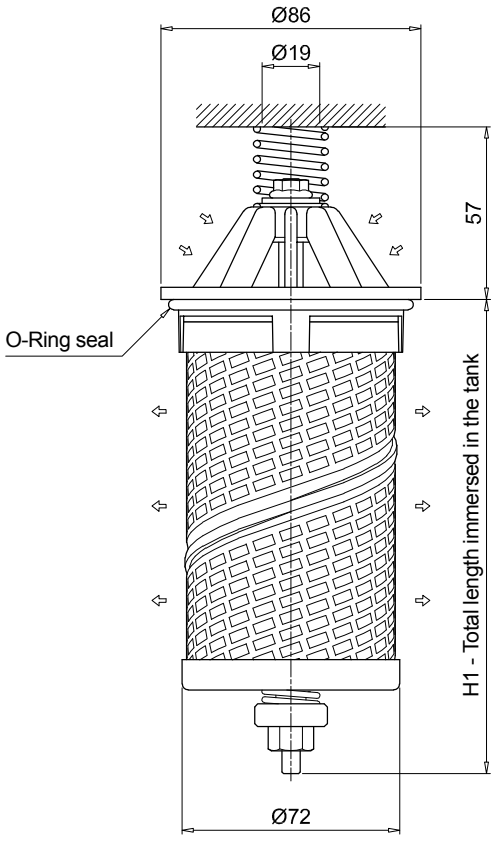

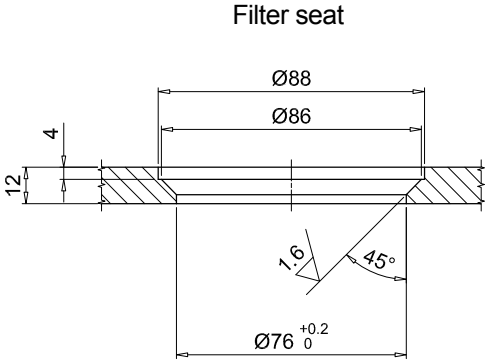

MPI100 without diffuser	
Filter length	H1 [mm]
1	141
2	185
3	235
4	335
5	435

Dimensions

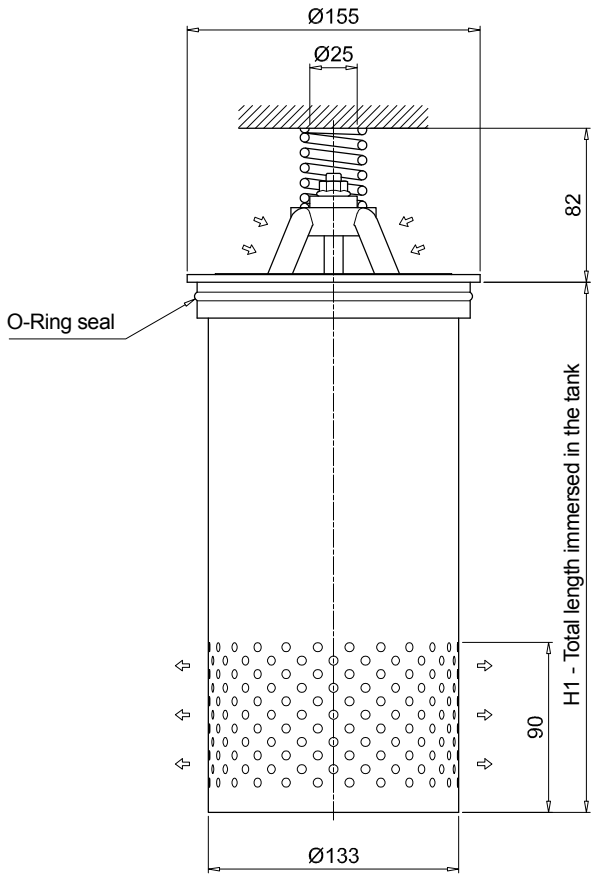

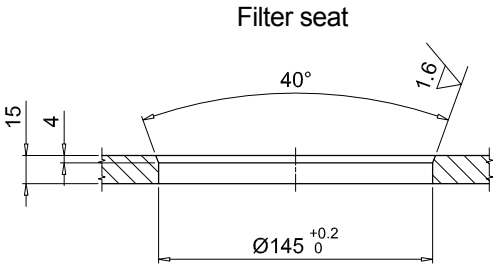

MPI250 with diffuser	
Filter length	**H1 [mm]**
1	266
2	266
3	336
4	524

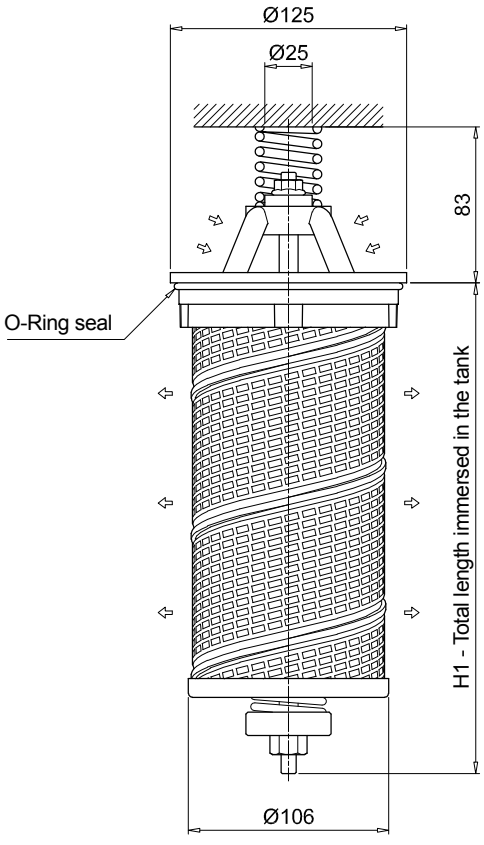

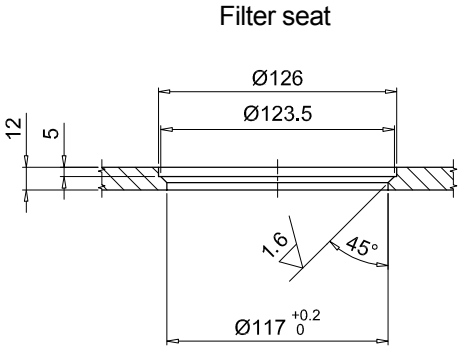

MPI250 without diffuser	
Filter length	**H1 [mm]**
1	193
2	243
3	313
4	516

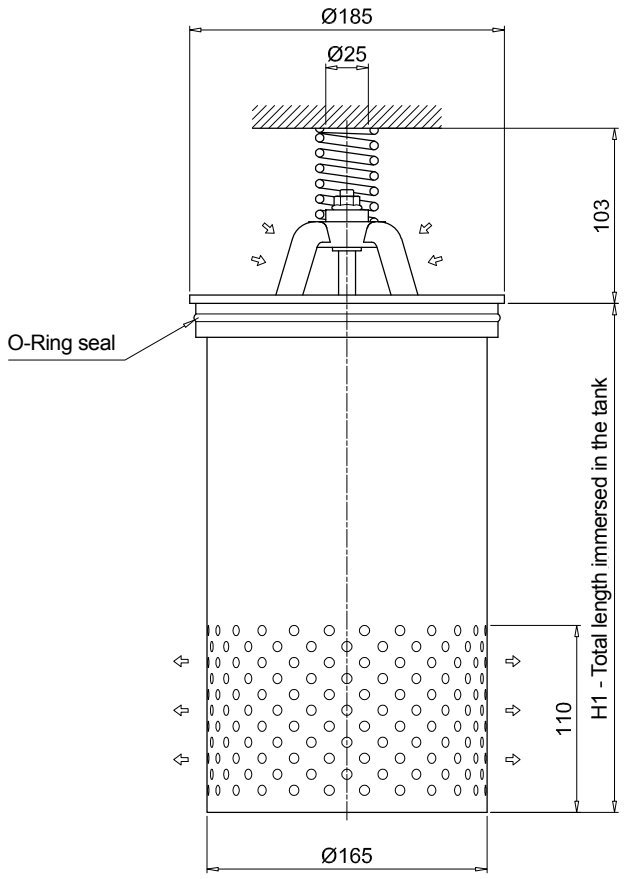

Filter seat

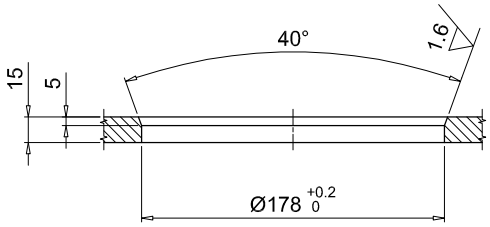

MPI630 with diffuser	
Filter length	H1 [mm]
1	298
2	378
3	478
4	568
5	868

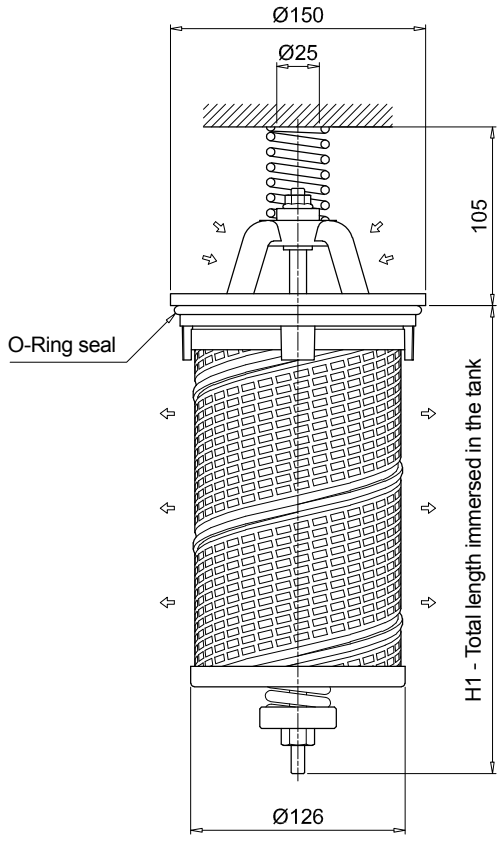

Filter seat

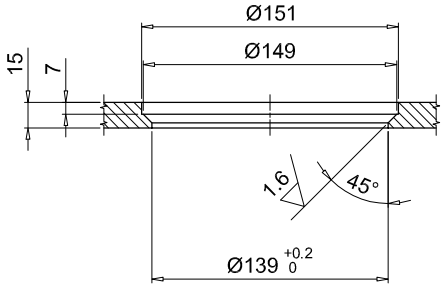

MPI630 without diffuser	
Filter length	H1 [mm]
1	275
2	355
3	455
4	540
5	841

Dimensions

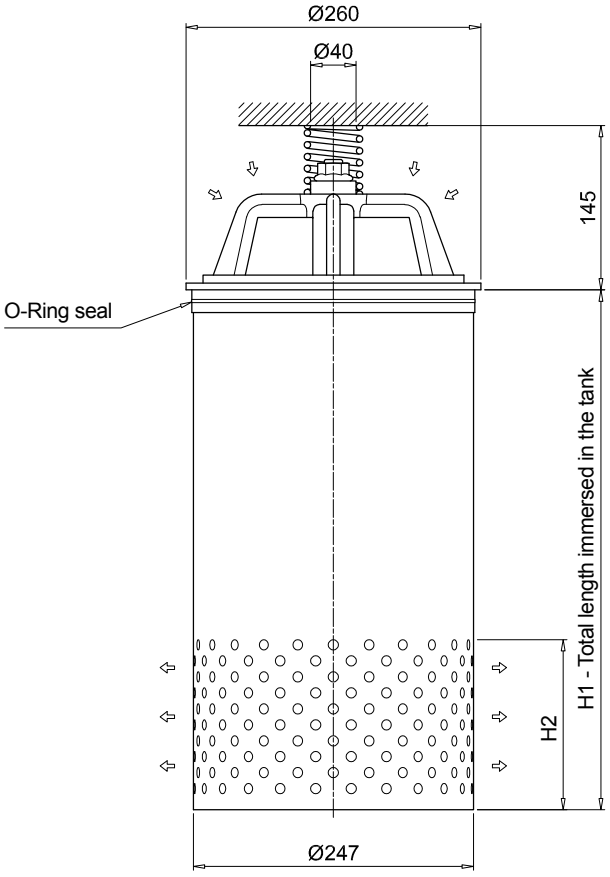

MPI850 with diffuser		
Filter length	H1 [mm]	H2 [mm]
1	427	150
2	642	150
3	922	250
4	1187	250

Filter seat

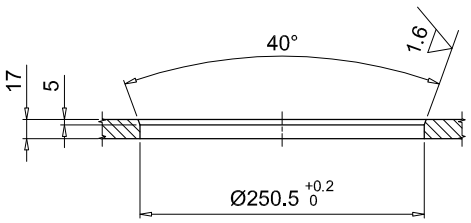

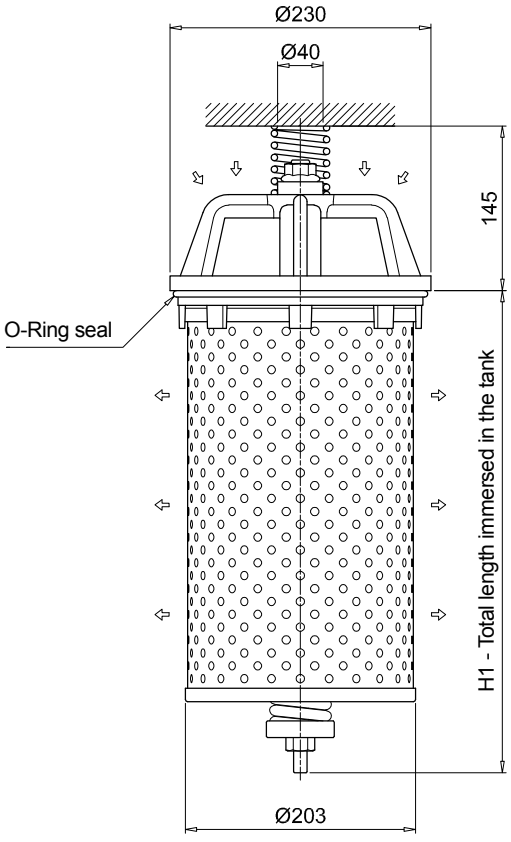

MPI850 without diffuser	
Filter length	H1 [mm]
1	405
2	620
3	900
4	1165

Filter seat

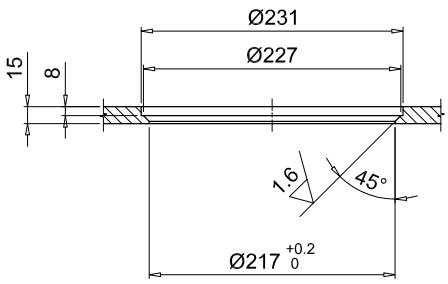

Order number for spare parts

MPI 100

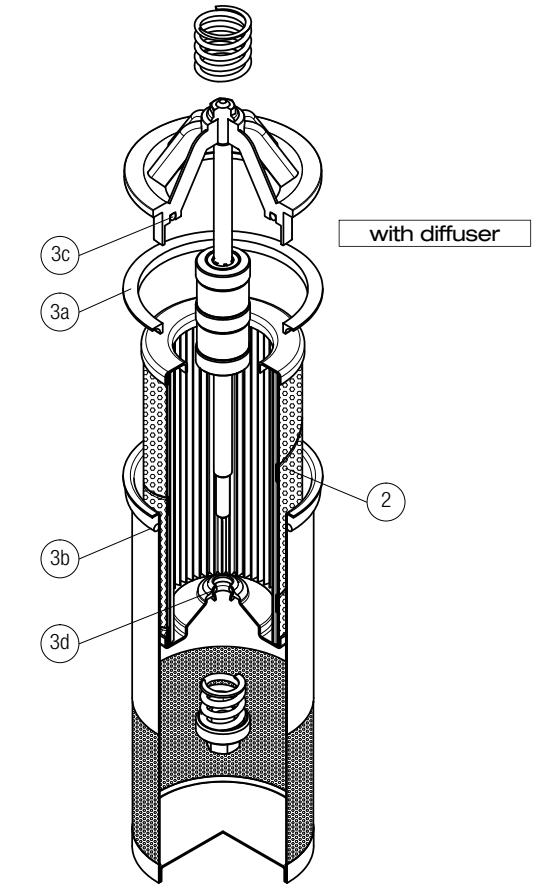

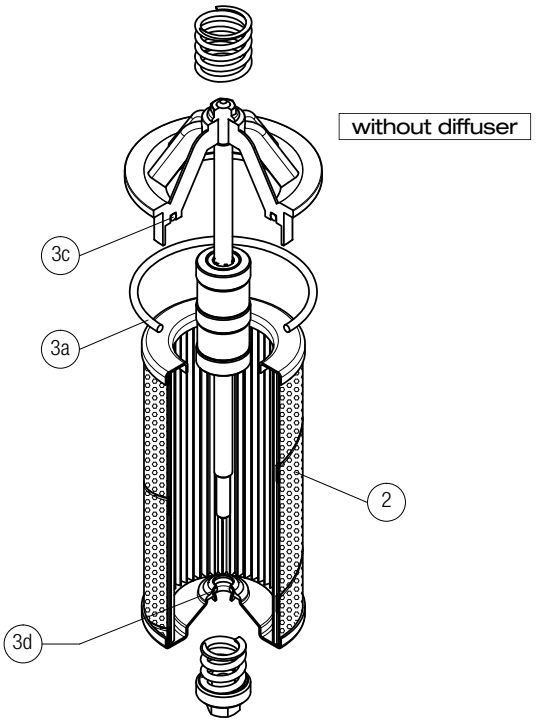

Item:	Q.ty: 1 pc. 2	Q.ty: 1 pc. 3 (3a ÷ 3d)	
Filter series	**Filter element**	**Seal Kit code number NBR**	**FPM**
MPI 100	See order table	02050145	02050146

MPI 250 - 630

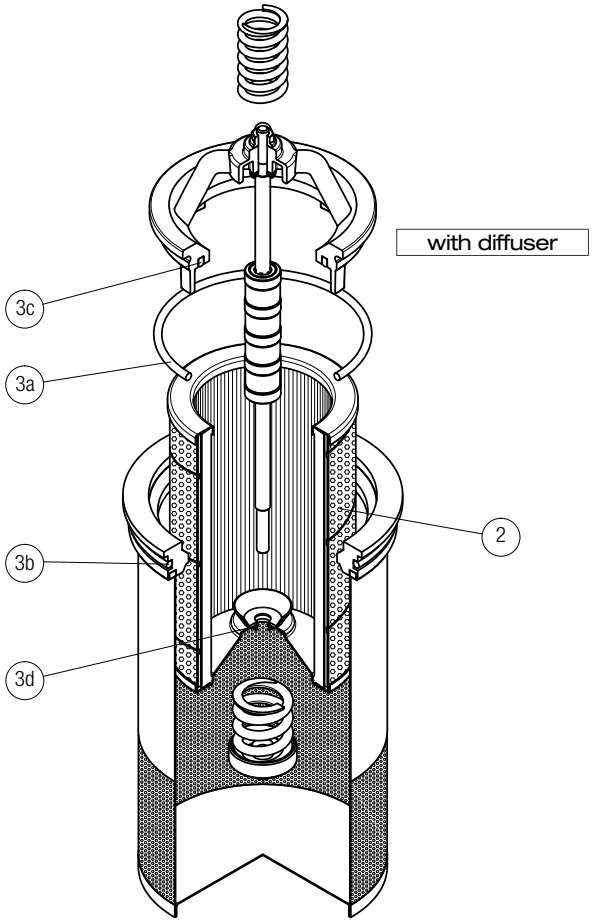

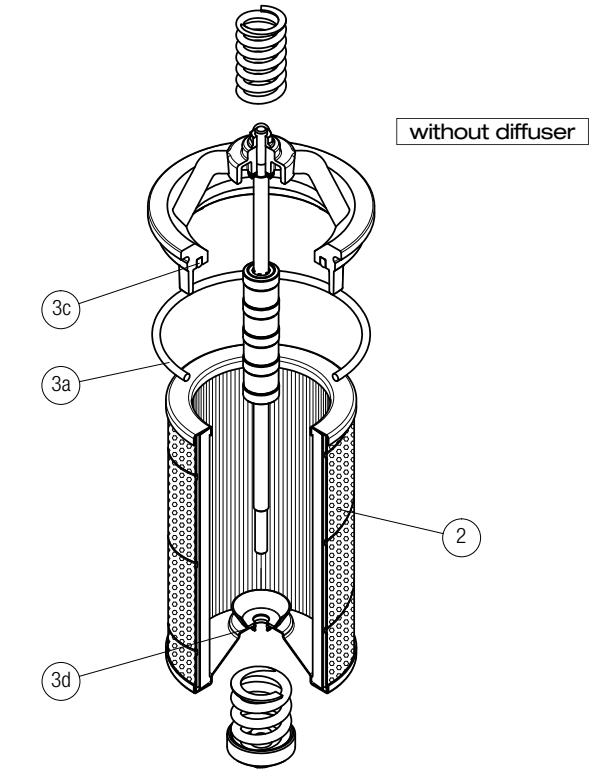

Item:	Q.ty: 1 pc. 2	Q.ty: 1 pc. 3 (3a ÷ 3d)	
Filter series	**Filter element**	**Seal Kit code number NBR**	**FPM**
MPI 250	See order table	02050147	02050148
MPI 630		02050112	02050113

MPI 850

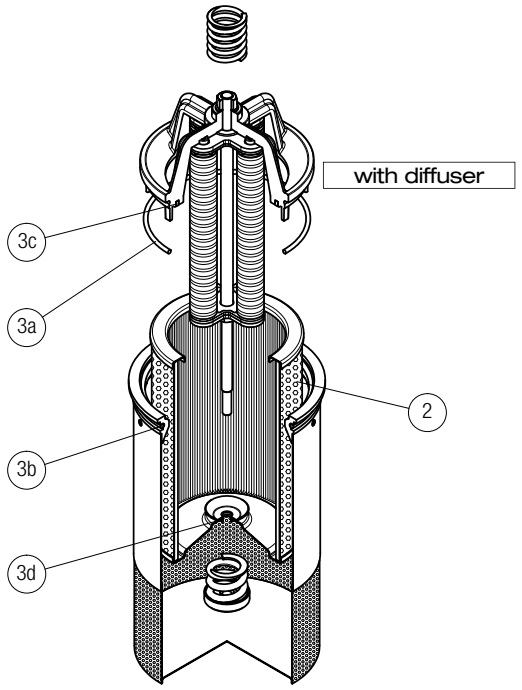

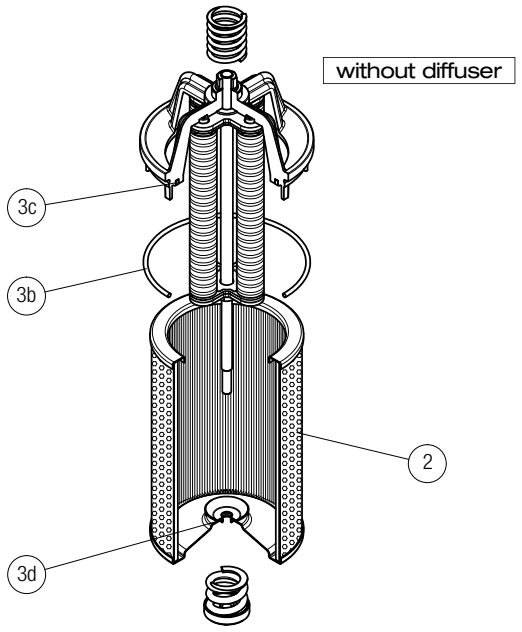

Item:	Q.ty: 1 pc. 2	Q.ty: 1 pc. 3 (3a ÷ 3d)	
Filter series	Filter element	Seal Kit code number NBR	FPM
MPI 850	See order table	02050114	02050115

FRI series

Maximum working pressure up to 2 MPa (20 bar) - Flow rate up to 2500 l/min



Description

Return filter

Maximum working pressure up to 2 MPa (20 bar)
Flow rate up to 2500 l/min

FRI is a range of return filters for protection of the reservoir against the system contamination.
They could be directly fixed to the reservoir in immersed or semi-immersed position or connected to the lines of the system through the hydraulic fittings.
The filter output must be always immersed into the fluid to avoid aeration or foam generation into the reservoir.

Available features:
- Female threaded connections up to 2 1/2" and flanged connections up to 3 1/2", for a maximum flow rate of 2500 l/min
- Double input connections, to connect several return lines or drains
- Fine filtration rating, to get a good cleanliness level into the reservoir
- Bypass valve, to relieve excessive pressure drop across the filter media
- Visual, electrical and electronic differential clogging indicators

Common applications:
Heavy duty industrial equipment

Technical data

Filter housing materials
- Filter body
  Aluminium: FRI 255
  Anodized Aluminium: FRI 025-040-100-250-630
  Phosphatized Steel: FRI 850

- Cover
  Polyamide, GF reinforced: FRI 255
  Anodized Aluminium: FRI 025-040-100-250-630-850

- Valve: Polyamide, GF reinforced - Steel

Bypass valve
Opening pressure 240 kPa (2.4 bar) ±10%

Δp element type
- Microfibre filter elements - series N: 10 bar
- Fluid flow through the filter element from OUT to IN

Seals
- Standard NBR series A
- Optional FPM series V

Temperature
From -25 °C to +110 °C

Note
FRI filters are provided for vertical mounting



Weights [kg] and volumes [dm³]

Filter series	Weights [kg]		Volumes [dm³]	
	Length	1	Length	1
FRI 025		1.0		0.28
FRI 040		2.0		0.70
FRI 100		3.8		1.09
FRI 250		6.3		2.60
FRI 255		4.2		3.20
FRI 630		13.8		7.05
FRI 850		48.0		21.50

FILTER ASSEMBLY SIZING
Flow rates [l/min]

		Filter element design - N Series							
Filter series	Length	A03	A06	A10	A16	A25	M25 M60 M90	P10	P25
FRI 025	**1**	6	10	17	19	43	122	43	47
FRI 040	**1**	19	23	43	45	94	155	94	102
FRI 100	**1**	32	34	89	92	187	260	187	206
FRI 250	**1**	144	179	271	300	448	645	448	490
FRI 255	**1**	144	179	271	300	448	645	448	490
FRI 630	**1**	242	279	508	577	834	1446	834	911
FRI 850	**1**	440	541	971	1143	1705	2528	1705	1880

Maximum flow rate for a complete return filter with a pressure drop Δp = 0.5 bar.
The reference fluid has a kinematic viscosity of 30 mm^2/s (cSt) and a density of 0.86 kg/dm^3.
For different pressure drop or fluid viscosity we recommend to use our selection software available on www.mpfiltri.com.
You can also calculate the right size using the formulas present on the FILTER SIZING paragraph at the beginning of the full catalogue or at the beginning of the filter family brochure.
Please, contact our Sales Department for further additional information.

Hydraulic symbols

Filter series	Style 1 connection + Diff. indic.	Style 2 connections + Diff. indic.
FRI 025		•
FRI 040		•
FRI 100		•
FRI 250		•
FRI 255	•	
FRI 630		•
FRI 850	•	

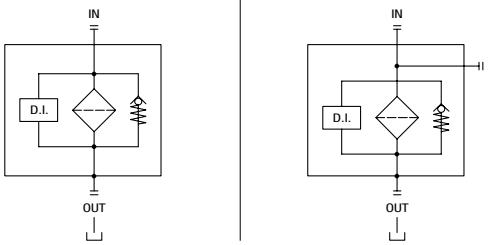

Pressure drop

Filter housings Δp pressure drop

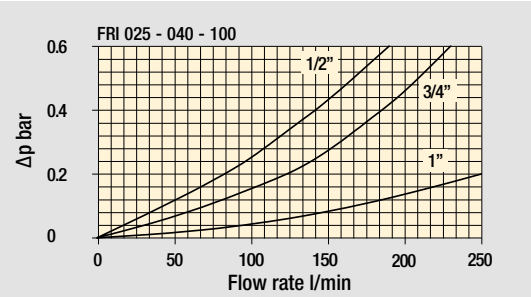

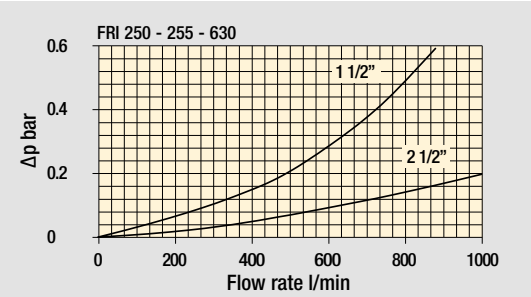

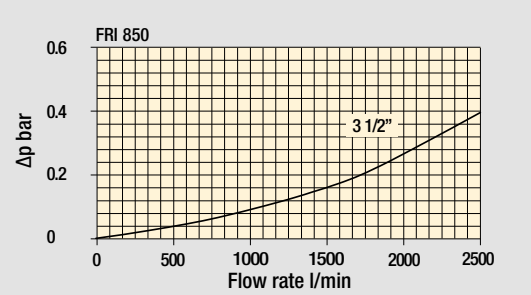

Bypass valve pressure drop

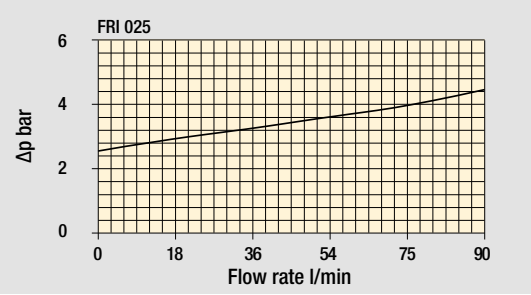

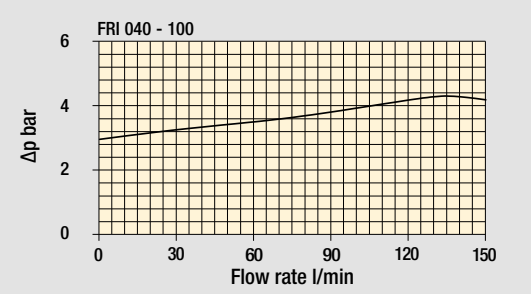

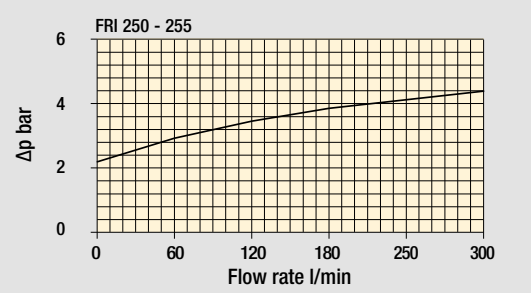

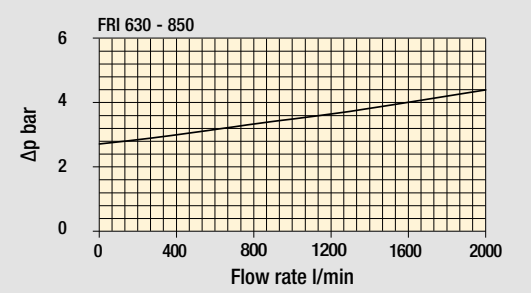

The curves are plotted using mineral oil with density of 0.86 kg/dm^3 in compliance with ISO 3968. Δp varies proportionally with density.

Designation & Ordering code

COMPLETE FILTER

Configuration example 1:	FRI025	B	A	G1	A25	N	P01
Configuration example 2:	FRI040	S	W	G2	M25	N	P01

Series and size
- **FRI025**
- **FRI040**

Bypass valve
- **B** With bypass
- **S** Without bypass

Seals and treatments		Filtration rating Axx	Mxx	Pxx
A	NBR	•	•	•
V	FPM	•	•	•
W	NBR head anodized	•	•	
Z	FPM head anodized	•	•	

filter element compatible with fluids HFA-HFB-HFC

Connections for FRI025	Connections for FRI040
G1 G 1/2"	G 3/4"
G2 1/2" NPT	3/4" NPT
G3 SAE 8 - 3/4" - 16 UNF	SAE 12 - 1 1/16" - 12 UN

Filtration rating (filter media)

A03	Inorganic microfiber 3 µm	**M25**	Wire mesh 25 µm
A06	Inorganic microfiber 6 µm	**M60**	Wire mesh 60 µm
A10	Inorganic microfiber 10 µm	**M90**	Wire mesh 90 µm
A16	Inorganic microfiber 16 µm	**P10**	Resin impregnated paper 10 µm
A25	Inorganic microfiber 25 µm	**P25**	Resin impregnated paper 25 µm

Element Δp
- **N** 10 bar

Execution
- **P01** MP Filtri standard
- **Pxx** Customized

FILTER ELEMENT

Configuration example 1:	CU025	A25	N	P01
Configuration example 2:	CU040	M25	W	P01

Element series and size
- **CU025**
- **CU040**

Filtration rating (filter media)

A03	Inorganic microfiber 3 µm	**M25**	Wire mesh 25 µm
A06	Inorganic microfiber 6 µm	**M60**	Wire mesh 60 µm
A10	Inorganic microfiber 10 µm	**M90**	Wire mesh 90 µm
A16	Inorganic microfiber 16 µm	**P10**	Resin impregnated paper 10 µm
A25	Inorganic microfiber 25 µm	**P25**	Resin impregnated paper 25 µm

Seals and treatments		Filtration rating Axx	Mxx	Pxx
N	NBR	•	•	•
V	FPM	•	•	•
W	NBR	•	•	
Z	FPM	•	•	

filter element compatible with fluids HFA-HFB-HFC

Execution
- **P01** MP Filtri standard
- **Pxx** Customized

ACCESSORIES

Indicators

		page
DEA	Electrical differential indicator	242
DEM	Electrical differential indicator	242-243
DLA	Electrical / visual differential indicator	243-244
DLE	Electrical / visual differential indicator	244
DTA	Electronic differential indicator	245
DVA	Visual differential indicator	245
DVM	Visual differential indicator	245

Additional features

		page
T2	Plug	246

FRI025

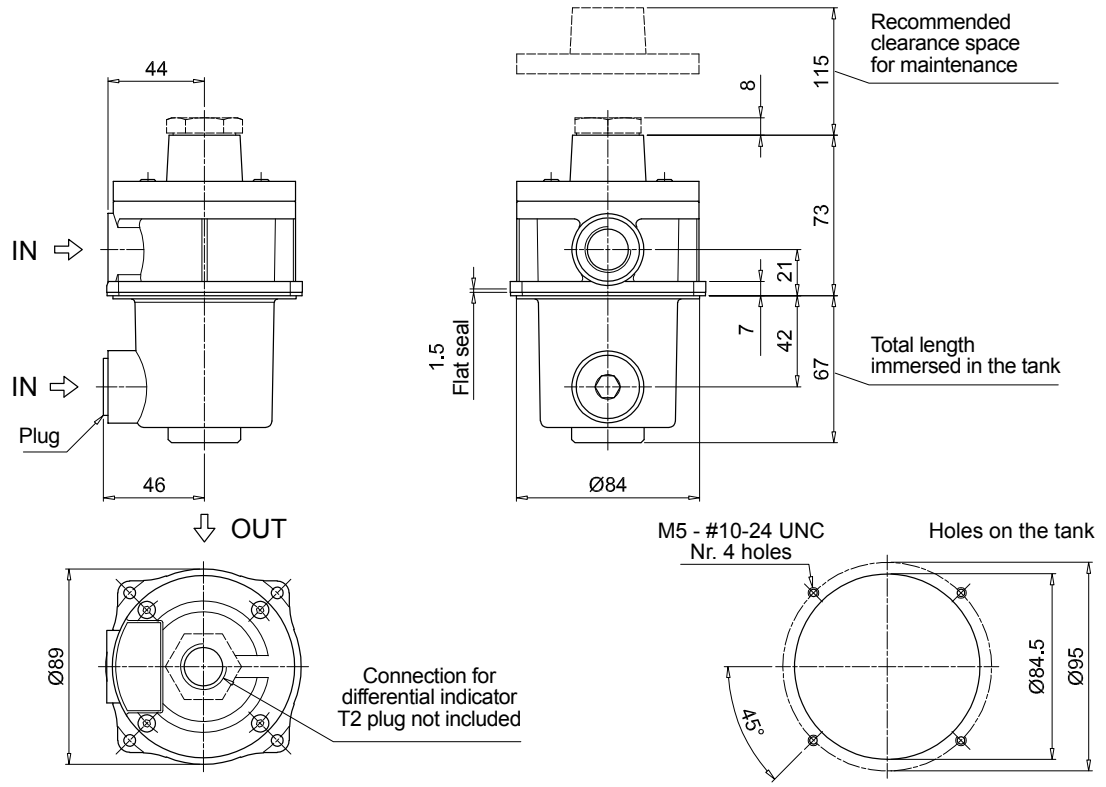

FRI040

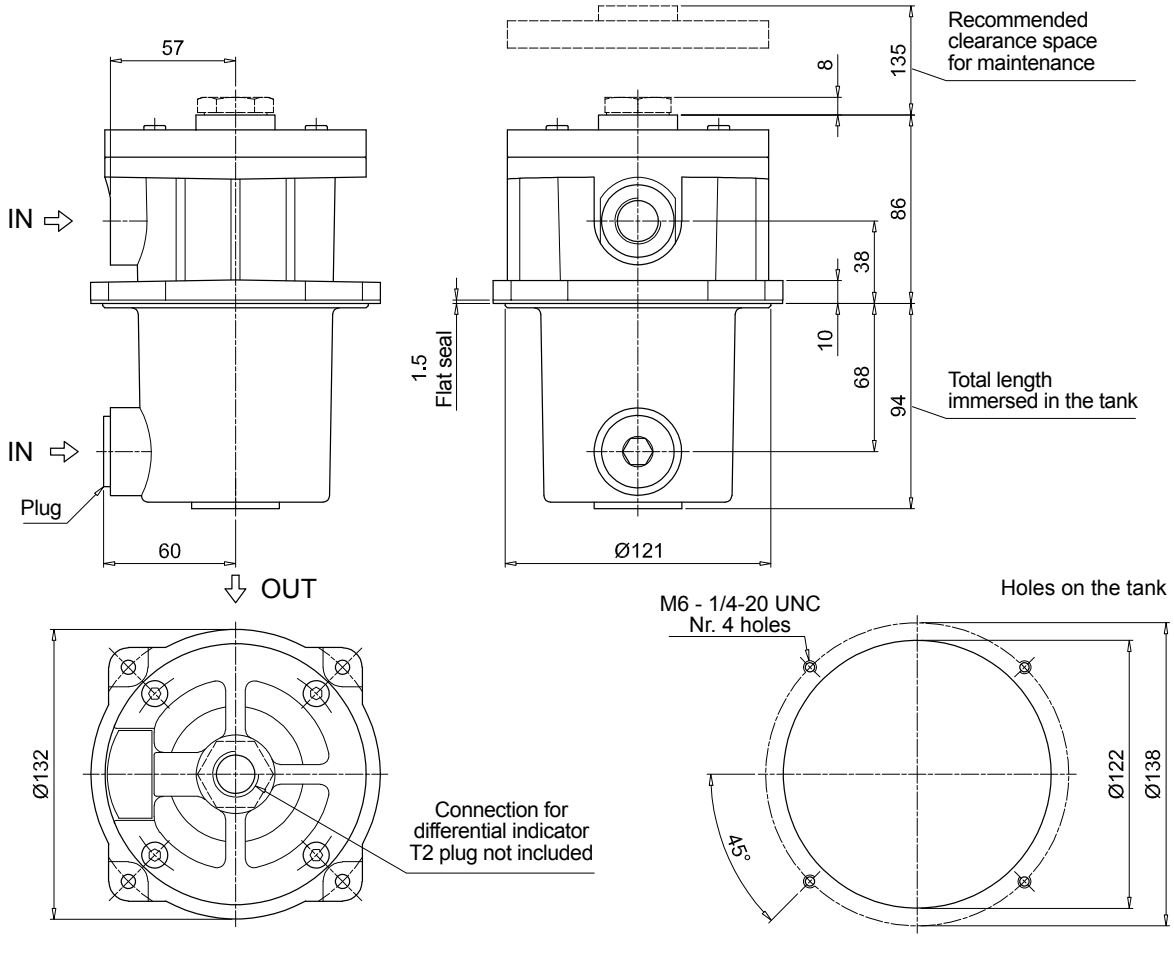

Designation & Ordering code

COMPLETE FILTER

Configuration example 1: FRI100 | B | A | G1 | A25 | N | P01

Configuration example 2: FRI630 | S | W | F2 | M25 | N | P01

Series and size

FRI100
FRI250
FRI630

Bypass valve

B	With bypass
S	Without bypass

Seals and treatments

		Filtration rating Axx	Mxx	Pxx
A	NBR	•	•	•
V	FPM	•	•	•
W	NBR head anodized	•	•	
Z	FPM head anodized	•	•	

filter element compatible with fluids HFA-HFB-HFC

Connections for FRI100	Connections for FRI250	Connections for FRI630
G1 G 1”	G 1 1/2”	G 2 1/2”
G2 1” NPT	1 1/2” NPT	2 1/2” NPT
G3 SAE 16 - 1 5/16” - 12 UN	SAE 24 - 1 7/8” - 12 UN	SAE 32 - 2 1/2” - 12 UN
F1 1” SAE 3000 psi/M	1 1/2” SAE 3000 psi/M	2 1/2” SAE 3000 psi/M
F2 1” SAE 3000 psi/UNC	1 1/2” SAE 3000 psi/UNC	2 1/2” SAE 3000 psi/UNC

Filtration rating (filter media)

A03	Inorganic microfiber 3 µm	**M25**	Wire mesh 25 µm
A06	Inorganic microfiber 6 µm	**M60**	Wire mesh 60 µm
A10	Inorganic microfiber 10 µm	**M90**	Wire mesh 90 µm
A16	Inorganic microfiber 16 µm	**P10**	Resin impregnated paper 10 µm
A25	Inorganic microfiber 25 µm	**P25**	Resin impregnated paper 25 µm

Element Δp

N	10 bar

Execution

P01	MP Filtri standard
Pxx	Customized

FILTER ELEMENT

Configuration example 1: CU100 | A25 | N | P01

Configuration example 2: CU630 | M25 | W | P01

Element series and size

CU100
CU250
CU630

Filtration rating (filter media)

A03	Inorganic microfiber 3 µm	**M25**	Wire mesh 25 µm
A06	Inorganic microfiber 6 µm	**M60**	Wire mesh 60 µm
A10	Inorganic microfiber 10 µm	**M90**	Wire mesh 90 µm
A16	Inorganic microfiber 16 µm	**P10**	Resin impregnated paper 10 µm
A25	Inorganic microfiber 25 µm	**P25**	Resin impregnated paper 25 µm

Seals and treatments

		Filtration rating Axx	Mxx	Pxx
N	NBR	•	•	•
V	FPM	•	•	•
W	NBR	•	•	
Z	FPM	•	•	

filter element compatible with fluids HFA-HFB-HFC

Execution

P01	MP Filtri standard
Pxx	Customized

ACCESSORIES

Indicators

		page
DEA	Electrical differential indicator	242
DEM	Electrical differential indicator	242-243
DLA	Electrical / visual differential indicator	243-244
DLE	Electrical / visual differential indicator	244
DTA	Electronic differential indicator	245
DVA	Visual differential indicator	245
DVM	Visual differential indicator	245

Additional features

		page
T2	Plug	246

FRI100
Threaded connections "G"

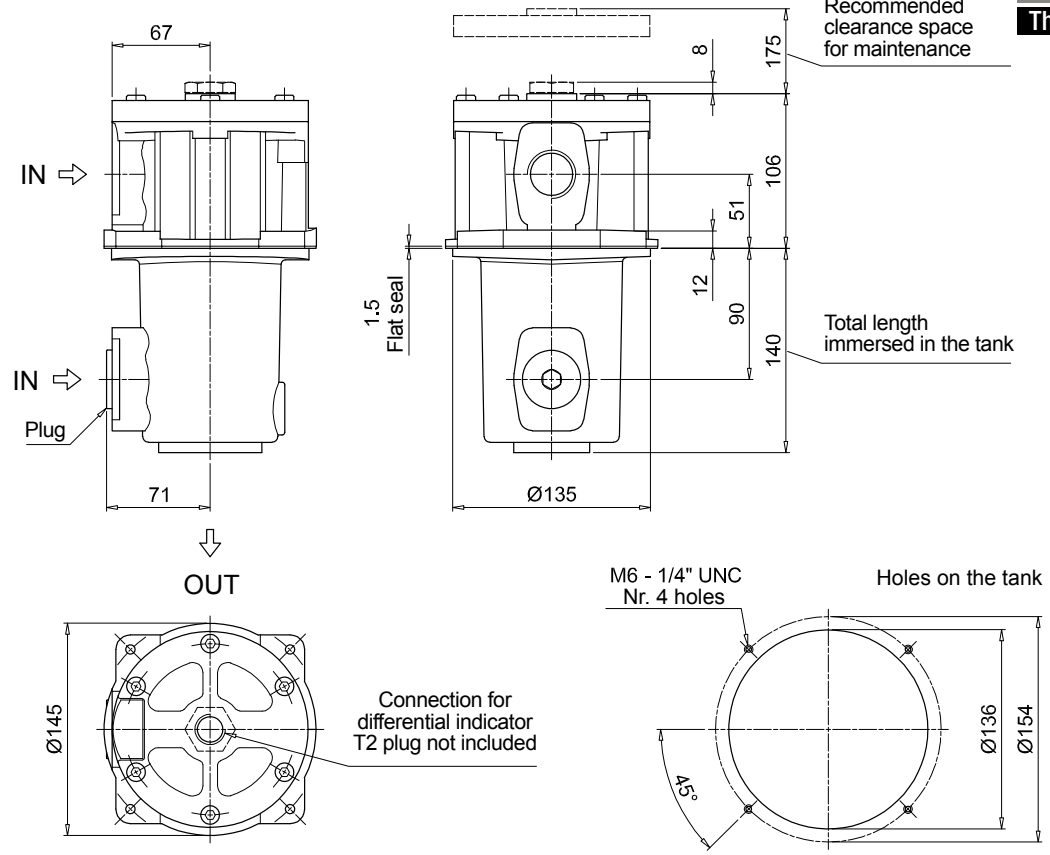

FRI100
Flange connections "F"

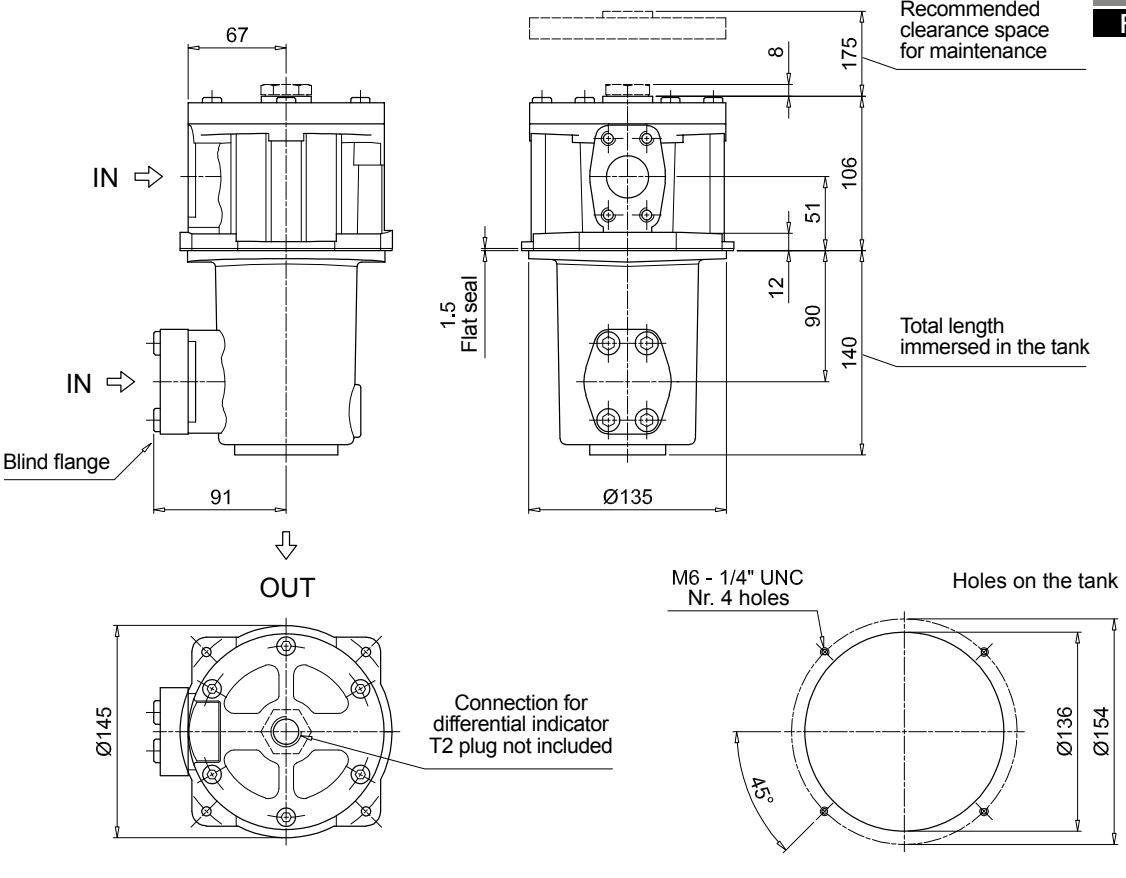

Dimensions

FRI250

Threaded connections "G"

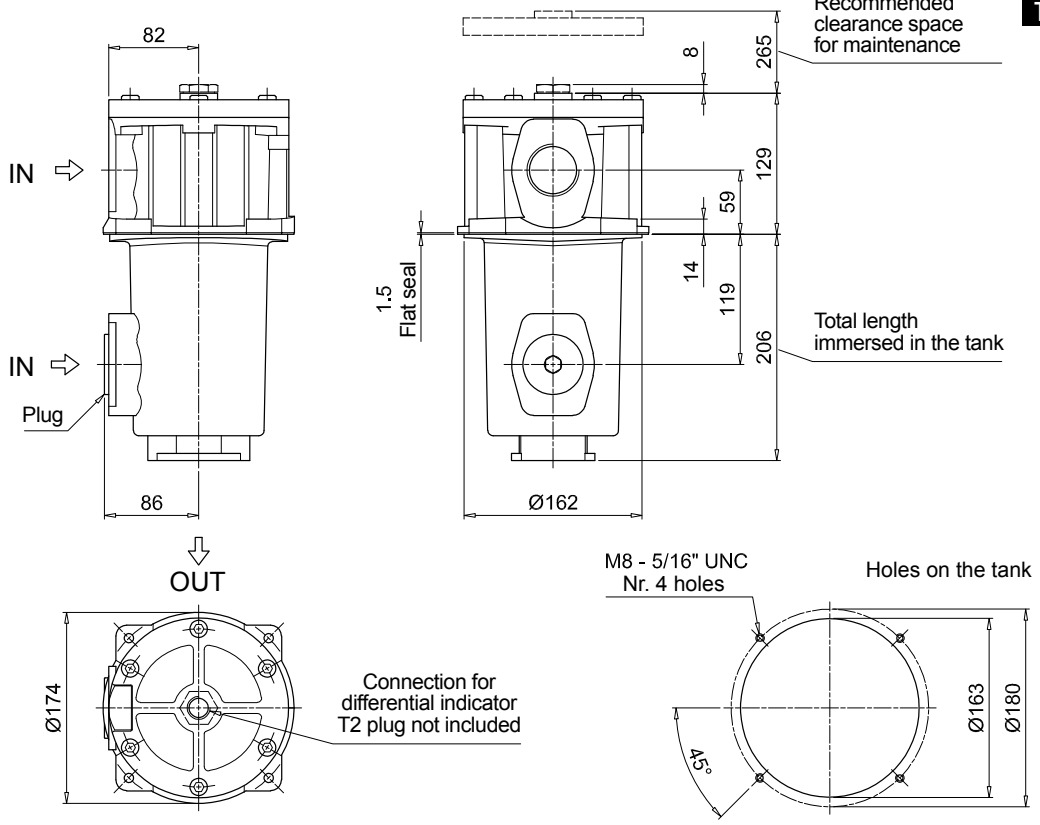

FRI250

Flange connections "F"

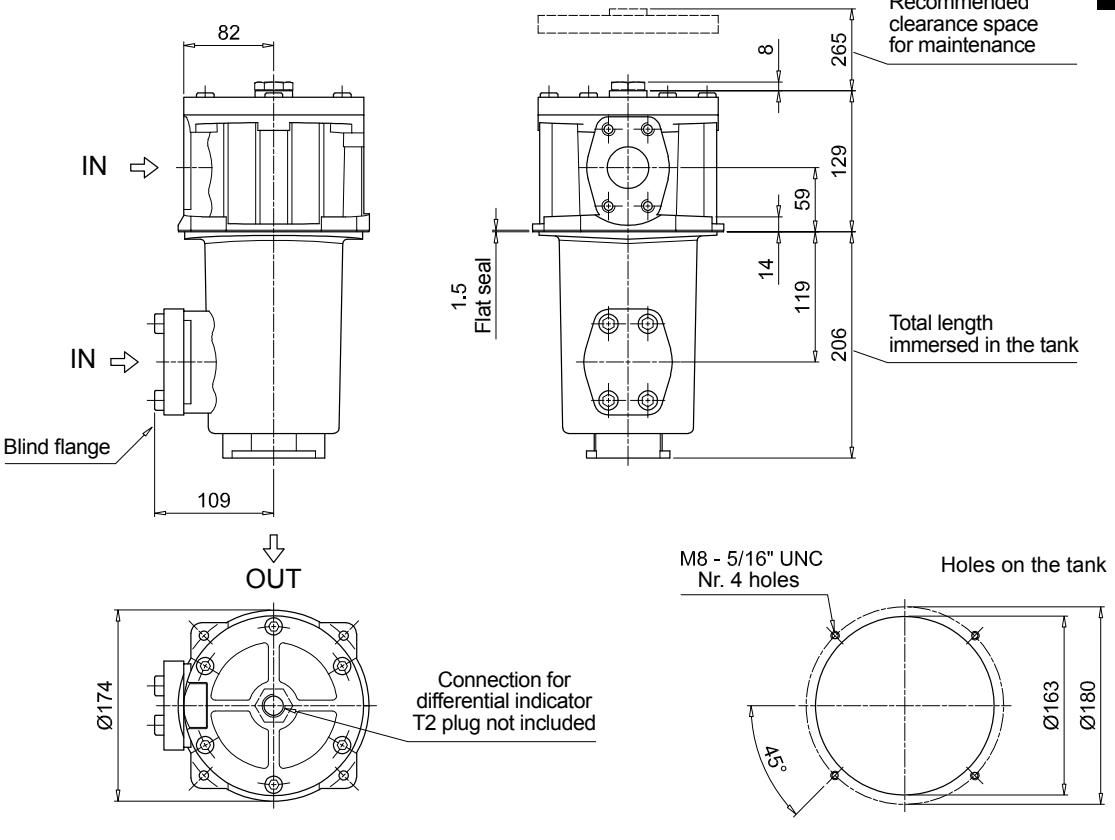

FRI630
Threaded connections "G"

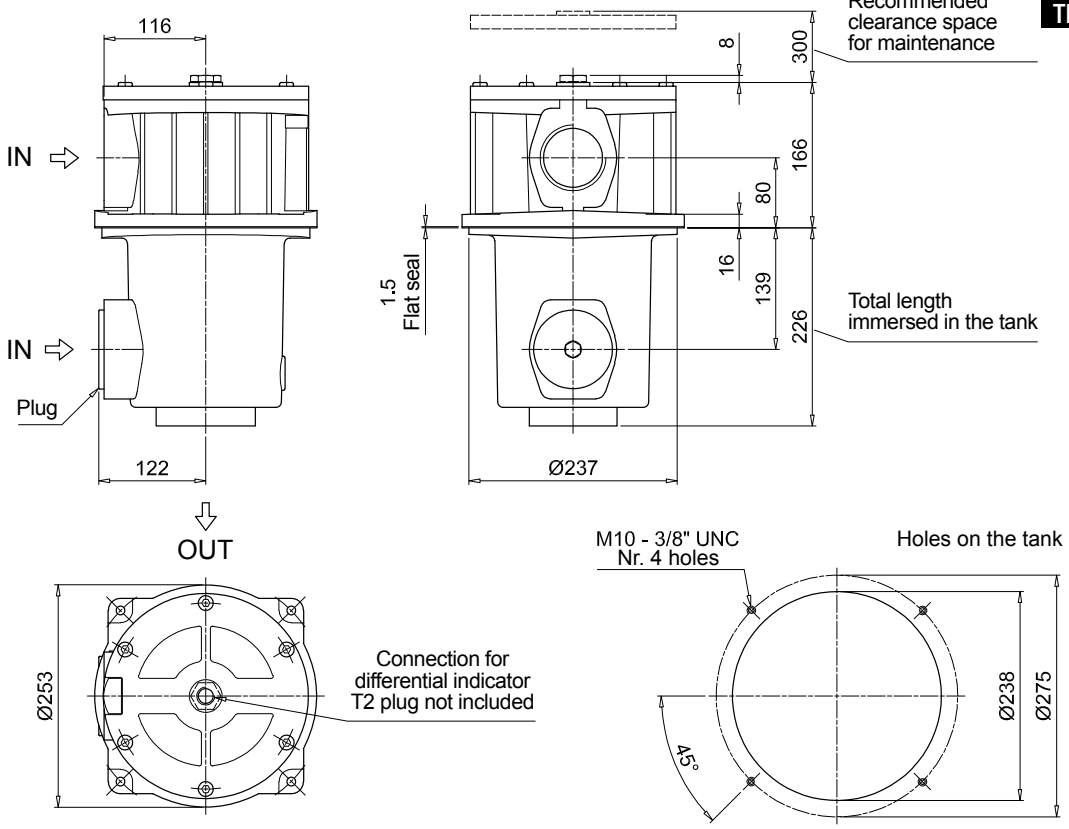

FRI630
Flange connections "F"

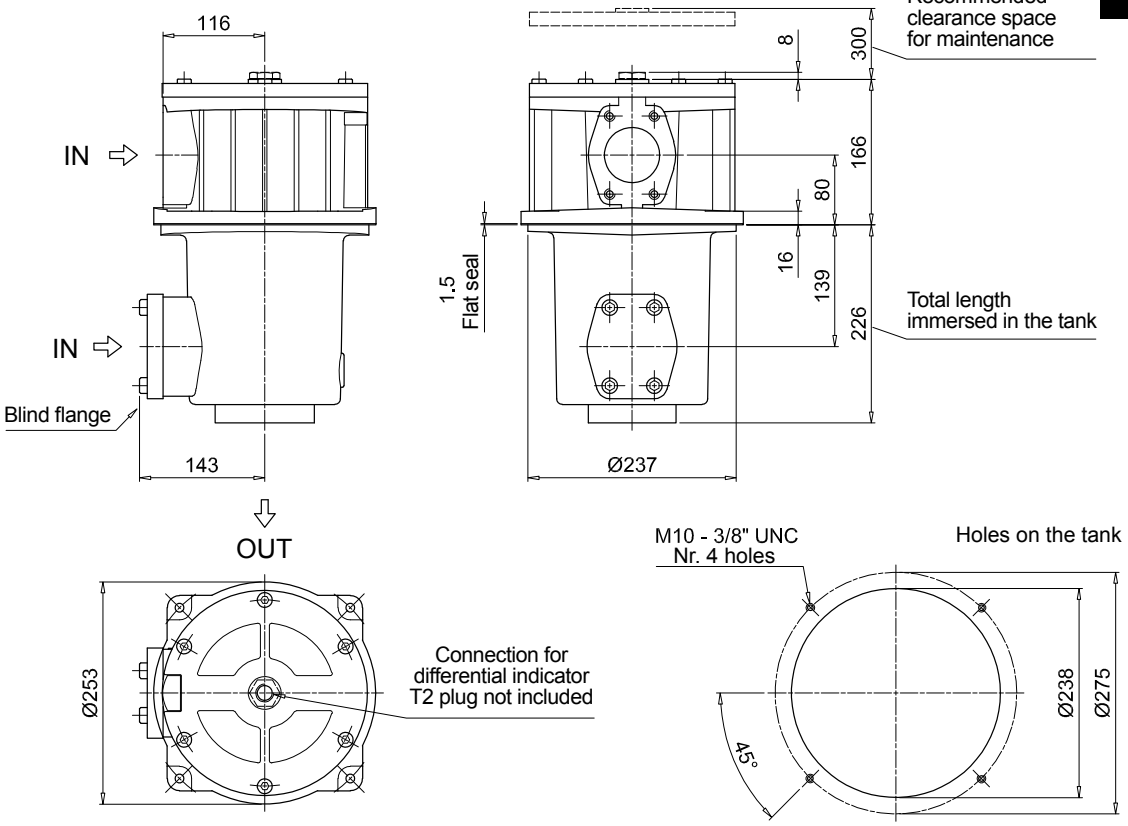

Designation & Ordering code

COMPLETE FILTER

Configuration example 1: FRI255 | S | W | F2 | M25 | N | P01

Configuration example 2: FRI850 | B | A | F1 | A25 | N | P01

Series and size

FRI255

FRI850

Bypass valve

B With bypass

S Without bypass

Seals and treatments

		Filtration rating Axx	Mxx	Pxx
A	NBR	•	•	•
V	FPM	•	•	•
W	NBR head anodized	•	•	
Z	FPM head anodized	•	•	

filter element compatible with fluids HFA-HFB-HFC

Connections for FRI255

G1 G 1 1/2"

G2 1 1/2" NPT

G3 SAE 24 - 1 7/8" - 12 UN

G4 G 1 1/4"

G5 1 1/4" NPT

G6 SAE 20 - 1 5/8" - 12 UN

F1 1 1/2" SAE 3000 psi/M

F2 1 1/2" SAE 3000 psi/UNC

Connections for FRI850

F1 3 1/2" SAE 3000 psi/M

F2 3 1/2" SAE 3000 psi/UNC

Filtration rating (filter media)

A03 Inorganic microfiber 3 µm

A06 Inorganic microfiber 6 µm

A10 Inorganic microfiber 10 µm

A16 Inorganic microfiber 16 µm

A25 Inorganic microfiber 25 µm

M25 Wire mesh 25 µm

M60 Wire mesh 60 µm

M90 Wire mesh 90 µm

P10 Resin impregnated paper 10 µm

P25 Resin impregnated paper 25 µm

Element Δp

N 10 bar

Execution

P01 MP Filtri standard

Pxx Customized

FILTER ELEMENT

Configuration example 1: CU250 | M25 | W | P01

Configuration example 2: CU850 | A25 | N | P01

Element series and size

CU250

CU850

Filtration rating (filter media)

A03 Inorganic microfiber 3 µm

A06 Inorganic microfiber 6 µm

A10 Inorganic microfiber 10 µm

A16 Inorganic microfiber 16 µm

A25 Inorganic microfiber 25 µm

M25 Wire mesh 25 µm

M60 Wire mesh 60 µm

M90 Wire mesh 90 µm

P10 Resin impregnated paper 10 µm

P25 Resin impregnated paper 25 µm

Seals and treatments

		Filtration rating Axx	Mxx	Pxx
N	NBR	•	•	•
V	FPM	•	•	•
W	NBR	•	•	
Z	FPM	•	•	

filter element compatible with fluids HFA-HFB-HFC

Execution

P01 MP Filtri standard

Pxx Customized

FRI255 ACCESSORIES

Indicators		page
BVA	Axial pressure gauge	240
BVR	Radial pressure gauge	240
BVP	Visual pressure indicator with automatic reset	241
BVQ	Visual pressure indicator with manual reset	241
BEA	Electrical pressure indicator	239
BEM	Electrical pressure indicator	239
BLA	Electrical / visual pressure indicator	239-240

FRI850 ACCESSORIES

Indicators		page
DEA	Electrical differential indicator	242
DEM	Electrical differential indicator	242-243
DLA	Electrical / visual differential indicator	243-244
DLE	Electrical / visual differential indicator	244
DTA	Electronic differential indicator	245
DVA	Visual differential indicator	245
DVM	Visual differential indicator	245

Additional features		page
T2	Plug	246

FRI255

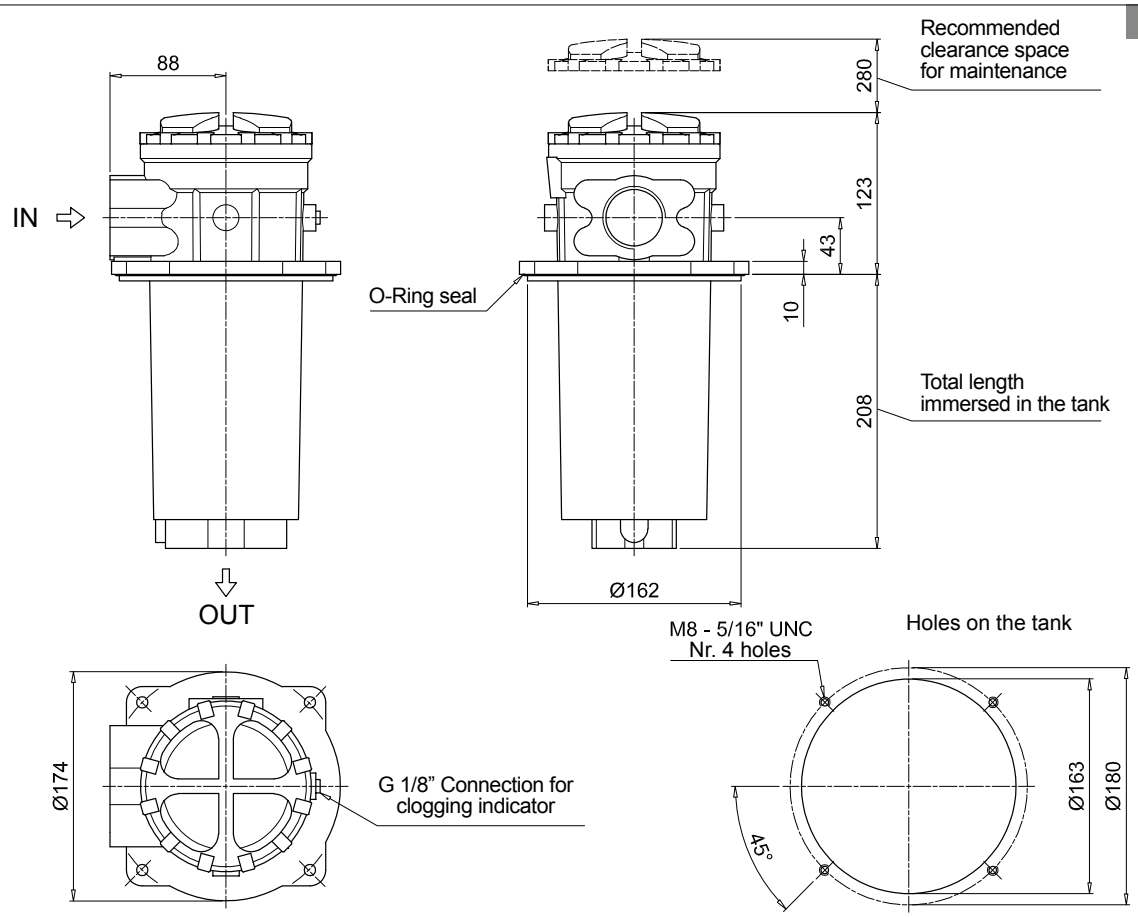

FRI850

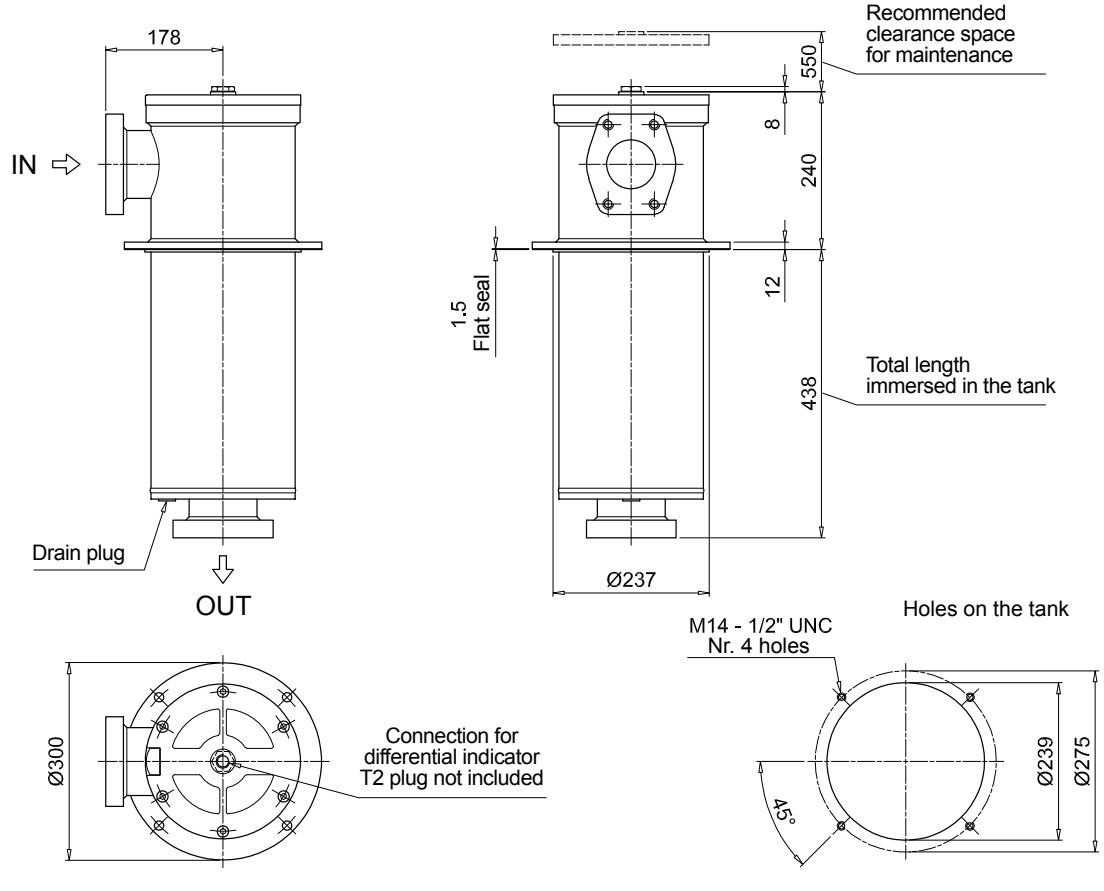

Order number for spare parts

FRI 025 - 040

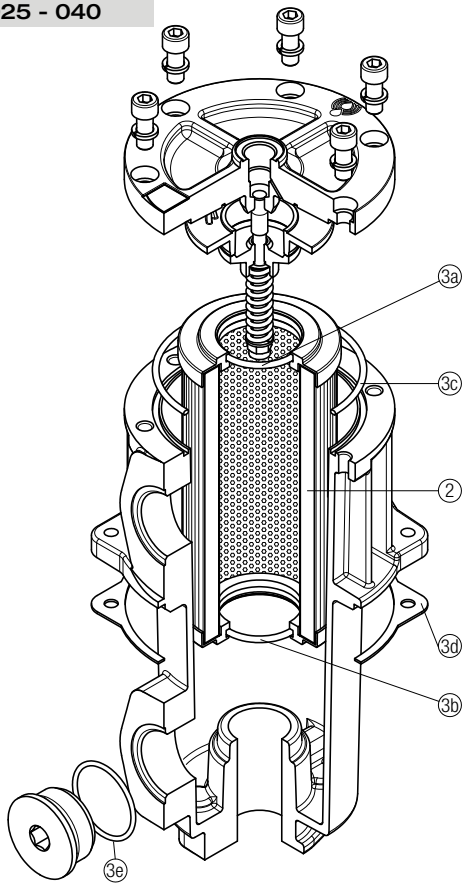

Item:	Q.ty: 1 pc. 2	Q.ty: 1 pc. 3 (3a ÷ 3e)	
Filter series	Filter element	Seal Kit code number NBR	FPM
FRI 025	See order table	02050213	02050220
FRI 040		02050214	02050221

FRI 100 - 250 - 630

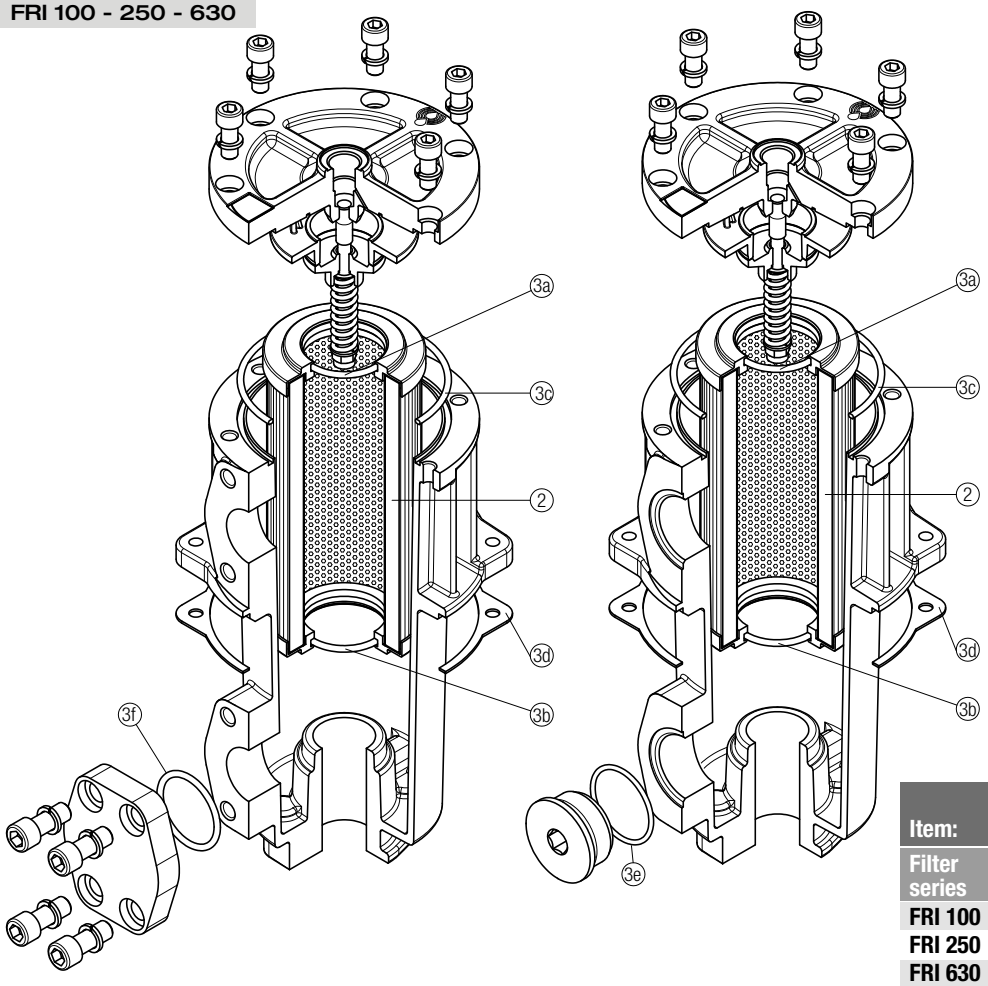

Item:	Q.ty: 1 pc. 2	Q.ty: 1 pc. 3 (3a ÷ 3f)	
Filter series	Filter element	Seal Kit code number NBR	FPM
FRI 100	See order table	02050215	02050222
FRI 250		02050216	02050223
FRI 630		02050217	02050224

Order number for spare parts

FRI 255

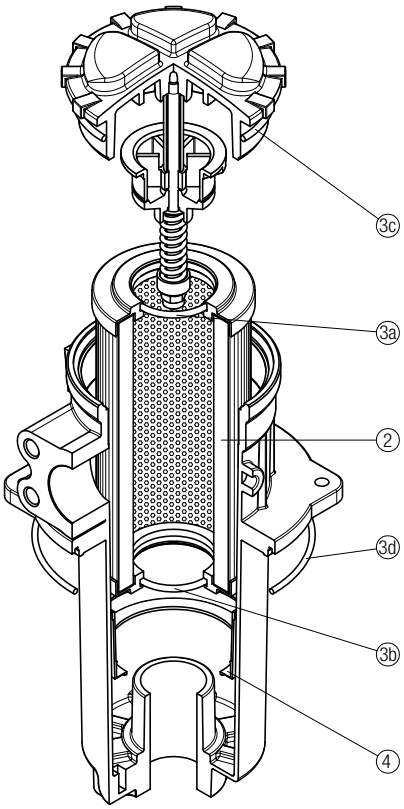

Item:	Q.ty: 1 pc. 2	Q.ty: 1 pc. 3 (3a ÷ 3d)		Q.ty: 1 pc. 4
Filter series	Filter element	Seal Kit code number NBR	FPM	Contamination retainer binder
FRI 255	See order table	02050013	02050014	01060301

FRI 850

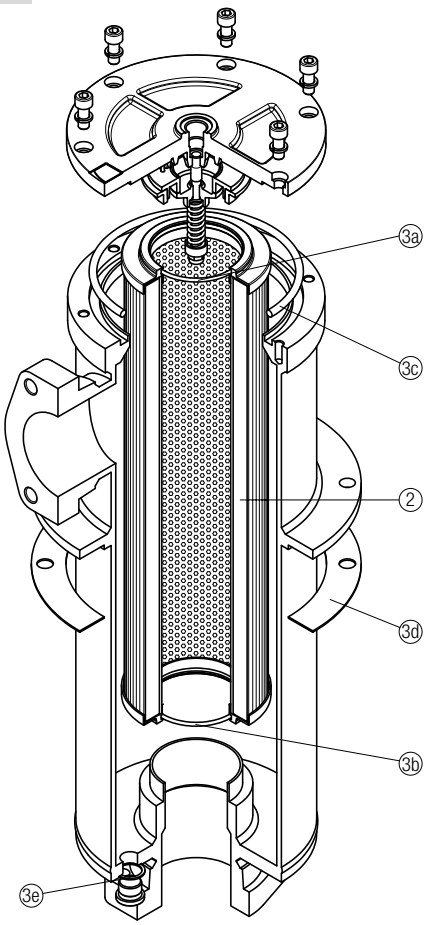

Item:	Q.ty: 1 pc. 2	Q.ty: 1 pc. 3 (3a ÷ 3e)	
Filter series	Filter element	Seal Kit code number NBR	FPM
FRI 850	See order table	02050218	02050225

RF2 series

Maximum working pressure up to 2 MPa (20 bar) - Flow rate up to 615 l/min



Description

Return filter

Maximum working pressure up to 2 MPa (20 bar)
Flow rate up to 615 l/min

RF2250 and RF2350 are ranges of return filters for side tank mounting with integrated shut-off valve for protection of the reservoir against the system contamination.
They are placed below the minimum oil level, directly connected to the return line of the system.
The shut-off valve closes automatically when the cover is removed, allowing the filter element replacement without the fluid drop.

Available features:
- Female threaded connections up to 1" and flanged connections up to 1 1/2", for a maximum flow rate of 615 l/min
- Bypass valve, to relieve excessive pressure drop across the filter media
- Magnetic filter, to hold the ferrous particles
- Visual, electrical and electronic clogging indicators

Common applications:
- Compact mobile machines
- Compact industrial equipment

Technical data

Filter housing materials
- Filter body: Aluminium
- Cover: Polyamide, GF reinforced
- Valve: Polyamide, GF reinforced - Steel
- Anti-Emptying valve: Steel

Bypass valve
Opening pressure 175 kPa (1.75 bar) ±10%

Δp element type
- Microfibre filter elements - series CU: 10 bar
- Fluid flow through the filter element from OUT to IN

Seals
- Standard NBR series A
- Optional FPM series V

Temperature
From -25 °C to +110 °C

Note
RF2 250-350 filters mounting, see the drawings on page 235 and following



Weights [kg] and volumes [dm³]

Filter series	Weights [kg]	Volumes [dm³]
	Length 1	Length 1
RF2 250	2.6	2.0
RF2 350	2.8	2.0

FILTER ASSEMBLY SIZING
Flow rates [l/min]

Filter series	Length	Filter element design - N Series							
		A03	A06	A10	A16	A25	M25 M60 M90	P10	P25
RF2 250	**1**	148	184	278	307	447	615	447	485
RF2 350	**1**	148	184	278	307	447	615	447	485

Maximum flow rate for a complete return filter with a pressure drop Δp = 0.5 bar.
The reference fluid has a kinematic viscosity of 30 mm^2/s (cSt) and a density of 0.86 kg/dm^3.
For different pressure drop or fluid viscosity we recommend to use our selection software available on www.mpfiltri.com.
You can also calculate the right size using the formulas present on the FILTER SIZING paragraph at the beginning of the full catalogue or at the beginning of the filter family brochure.
Please, contact our Sales Department for further additional information.

Filter series	Style B - E
RF2 250	•
RF2 350	•

Hydraulic symbols

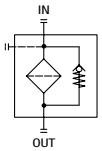

Pressure drop

Filter housings Δp pressure drop

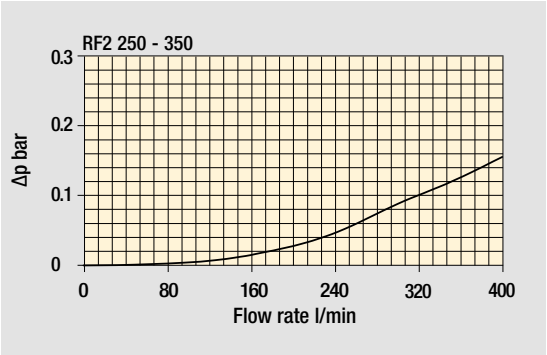

Bypass valve pressure drop

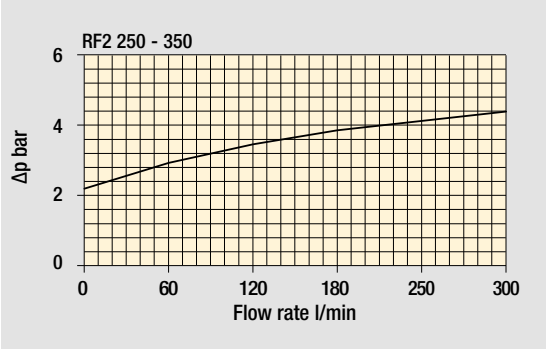

The curves are plotted using mineral oil with density of 0.86 kg/dm^3 in compliance with ISO 3968. Δp varies proportionally with density.

Designation & Ordering code

COMPLETE FILTER

Configuration example 1: RF2250 | W | F2 | E | M25 | P01

Configuration example 2: RF2350 | A | G1 | B | A25 | P01

Series and size

RF2250

RF2350

Seals and treatments

		Filtration rating Axx	Mxx	Pxx
A	NBR	•	•	•
V	FPM	•	•	•
W	NBR compatible with fluids HFA-HFB-HFC	•	•	
Z	FPM compatible with fluids HFA-HFB-HFC	•	•	

Connections

		Aux (only RF2350)	Mxx	Pxx
G1	G 1 1/2”	G 1”	•	•
G2	1 1/2” NPT	-	•	
G3	SAE 24 - 1 7/8” - 12 UN	SAE 16 - 1 5/16” - 12 UN	•	•
G4	G 1 1/4”	-	•	
G5	1 1/4” NPT	-	•	
G6	SAE 20 - 1 5/8” - 12 UN	-	•	
G7	G 1”	-	•	
G8	1” NPT	-	•	
G9	SAE 16 - 1 5/16” - 12 UN	-	•	
F1	1 1/2” SAE 3000 psi/M	-	•	
F2	1 1/2” SAE 3000 psi/UNC	-	•	

Bypass valve

B 1.75 bar

E 3 bar

Filtration rating (filter media)

A03	Inorganic microfiber 3 µm	**M25**	Wire mesh 25 µm
A06	Inorganic microfiber 6 µm	**M60**	Wire mesh 60 µm
A10	Inorganic microfiber 10 µm	**M90**	Wire mesh 90 µm
A16	Inorganic microfiber 16 µm	**P10**	Resin impregnated paper 10 µm
A25	Inorganic microfiber 25 µm	**P25**	Resin impregnated paper 25 µm

Execution

P01 MP Filtri standard

Pxx Customized

FILTER ELEMENT

Configuration example 1: CU250 | M25 | W | P01

Configuration example 2: CU250 | A25 | N | P01

Element series and size

CU250

Filtration rating (filter media)

A03	Inorganic microfiber 3 µm	**M25**	Wire mesh 25 µm
A06	Inorganic microfiber 6 µm	**M60**	Wire mesh 60 µm
A10	Inorganic microfiber 10 µm	**M90**	Wire mesh 90 µm
A16	Inorganic microfiber 16 µm	**P10**	Resin impregnated paper 10 µm
A25	Inorganic microfiber 25 µm	**P25**	Resin impregnated paper 25 µm

Seals and treatments

			Filtration rating Axx	Mxx	Pxx
N	NBR		•	•	•
V	FPM		•	•	•
W	NBR head anodized	filter element compatible with fluids HFA-HFB-HFC	•	•	
Z	FPM head anodized		•	•	

Execution

P01 MP Filtri standard

Pxx Customized

RF2250
Threaded connections "G"

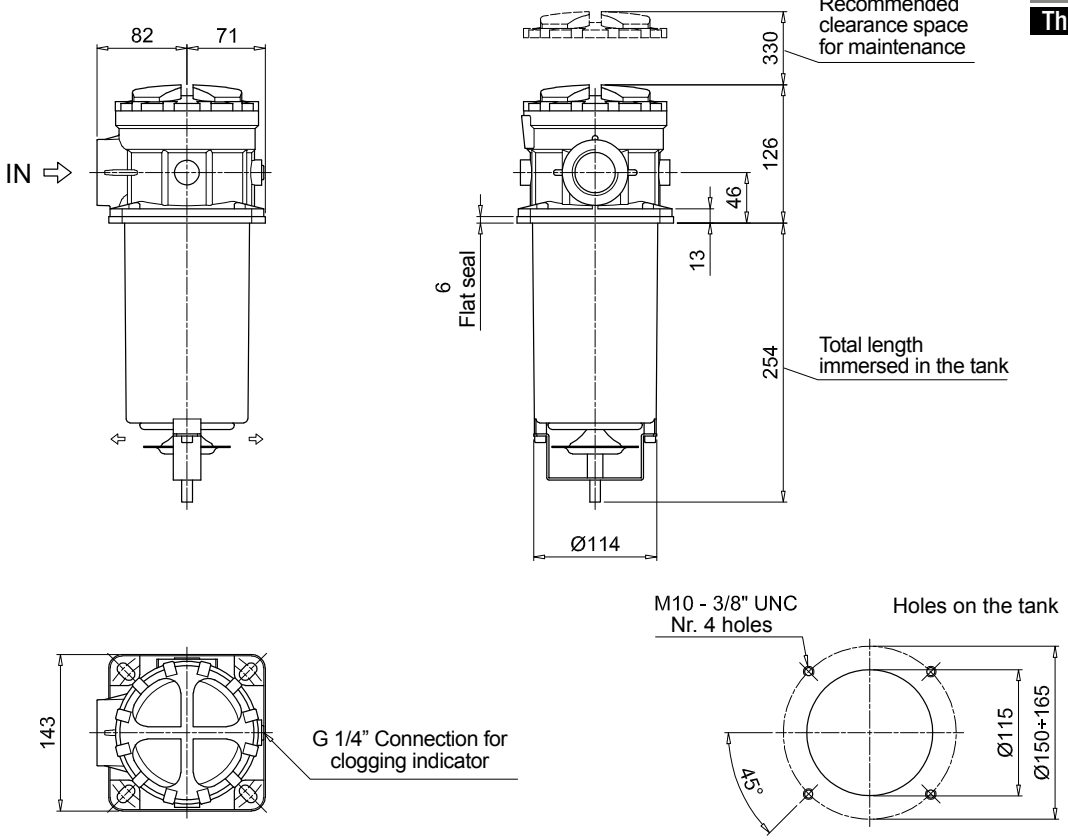

RF2250
Flange connections "F"

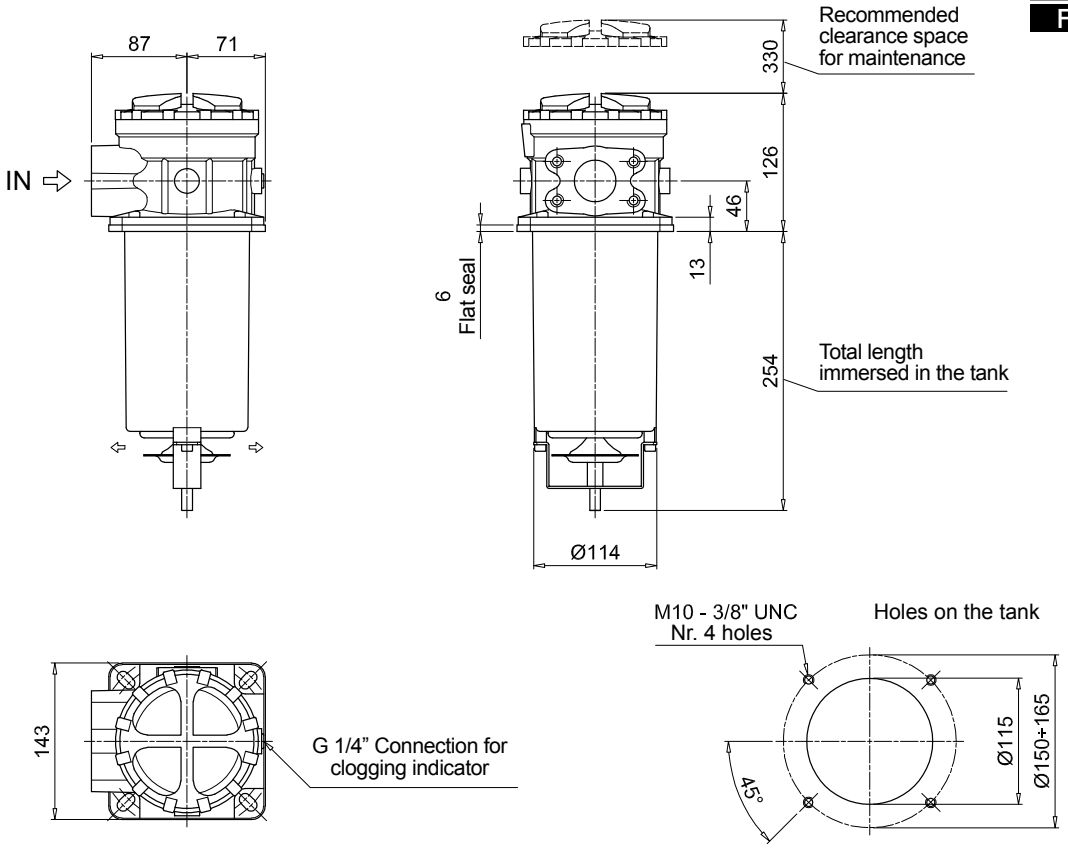

Dimensions

RF2350

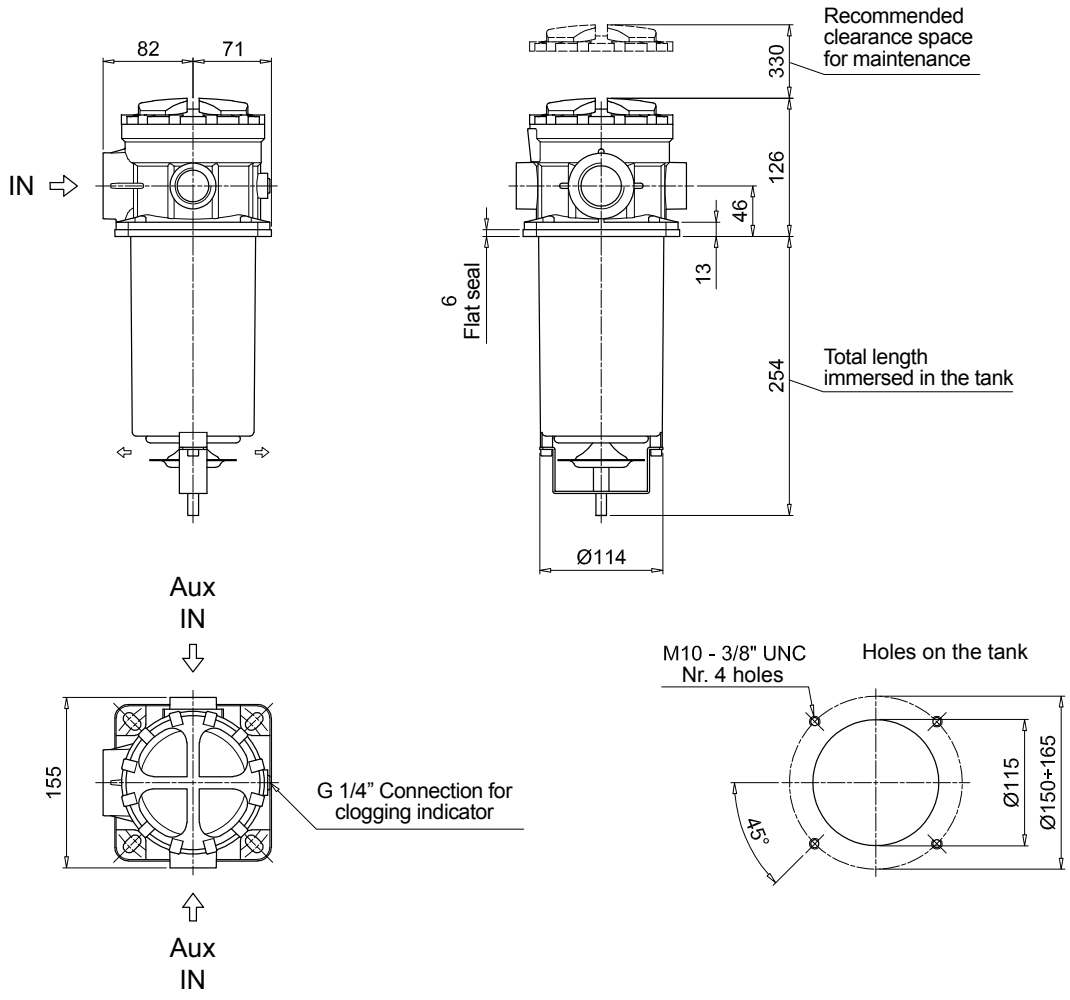

RF2 250 - 350

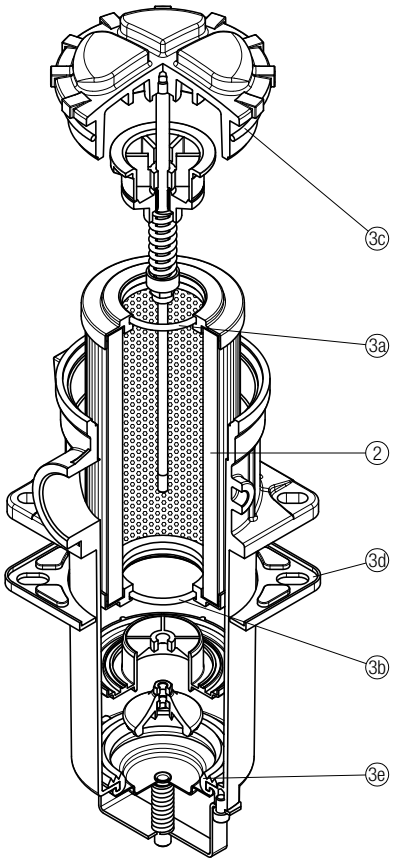

Item:	Q.ty: 1 pc. 2	Q.ty: 1 pc. 3 (3a ÷ 3e)	
Filter series	Filter element	Seal Kit code number NBR	FPM
RF2 250 RF2 350	See order table	02050586	02050587

Clogging indicators

Barometric indicators
Differential indicators

Introduction

Filter elements are efficient only if their Dirt Holding Capacity is fully exploited. This is achieved by using filter housings equipped with clogging indicators.

These devices trip when the clogging of the filter element causes an increase in pressure drop across the filter element.

The indicator is set to alarm before the element becomes fully clogged.

MP Filtri can supply indicators of the following designs:

- **Vacuum switches and gauges**
- **Pressure switches and gauges**
- **Differential pressure indicators**

These type of devices can be provided with a visual, electrical or both signals.

Suitable indicator types

BAROMETRIC INDICATORS

Pressure indicators are used on the Return line to check the efficiency of the filter element.
They measure the pressure upstream of the filter element.
Standard items are produced with R 1/8" EN 10226 connection.

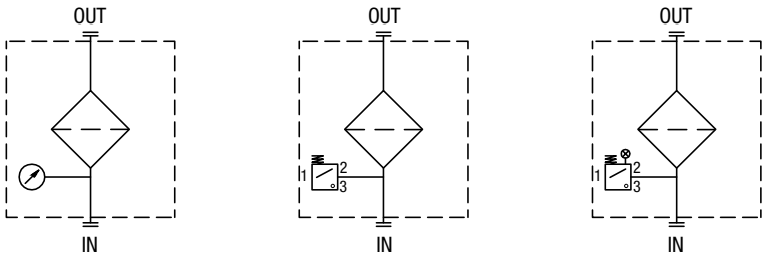

DIFFERENTIAL INDICATORS

Differential indicators are used on the Pressure line to check the efficiency of the filter element.
They measure the pressure upstream and downstream of the filter element (differential pressure).
Standard items are produced with special connection G 1/2" size.
Also available in Stainless Steel models.

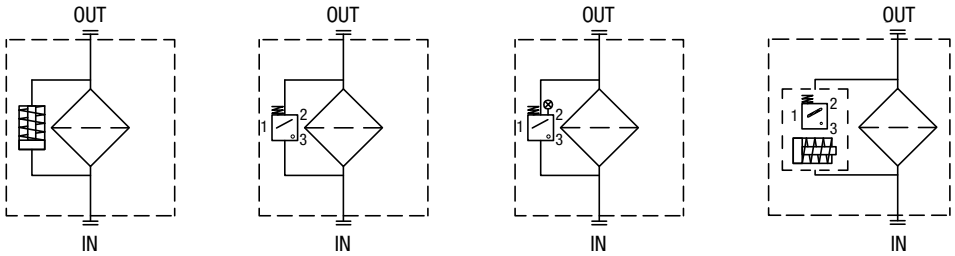

Quick reference guide

Filter series	Visual indicator	Electrical indicator	Electrical / Visual indicator	Electronic indicator
MPFX-MPTX-MPF-MPT with bypass 1.75 bar MPH with bypass 1.75 bar	BVA14P01 BVR14P01 BVP20HP01 BVQ20HP01	BEA15HA50P01 BEM15HA41P01	BLA15HA51P01 BLA15HA52P01 BLA15HA53P01 BLA15HA71P01	
MPFX-MPTX-MPF-MPT with bypass 3 bar MPH with bypass 2.5 bar FRI 255	BVA25P01 BVR25P01 BVP20HP01 BVQ20HP01	BEA20HA50P01 BEM20HA41P01	BLA20HA51P01 BLA20HA52P01 BLA20HA53P01 BLA20HA71P01	
MPLX FRI 025 - 040 - 100 - 250 - 630 - 850	DVA20xP01 DVM20xP01	DEA20xA50P01 DEM20xAxxP01	DLA20xA51P01 DLA20xA52P01 DLA20xA71P01 DLE20xA50P01 DLE20xF50P01	DTA20xF70P01

BEA*50

Electrical Pressure Indicator

Settings	Ordering code
1.5 bar ±10%	BE A 15 H A 50 P01
2.0 bar ±10%	BE A 20 H A 50 P01

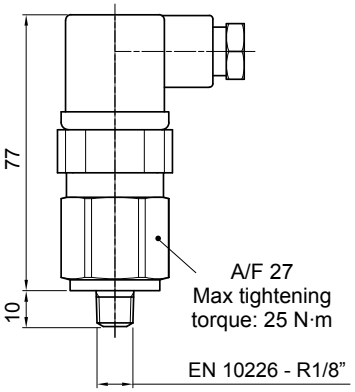

Hydraulic symbol

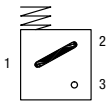

Electrical symbol

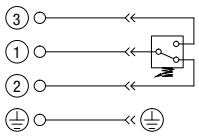

Materials
- Body: Brass
- Base: Black Nylon
- Contacts: Silver
- Seal: HNBR

Technical data
- Max working pressure: 40 bar
- Proof pressure: 60 bar
- Working temperature: From -25 °C to +80 °C
- Compatibility with fluids: Mineral oils, Synthetic fluids HFA, HFB, HFC according to ISO 2943
- Degree of protection: IP65 according to EN 60529

Electrical data
- Electrical connection: EN 175301-803
- Resistive load: 5 A / 14 Vdc
  4 A / 30 Vdc
  5 A / 125 Vac
  4 A / 250 Vac
- Available Atex product: II 1GD Ex ia IIC Tx Ex ia IIIC Tx°C X
- CE certification

BEM*41

Electrical Pressure Indicator

Settings	Ordering code
1.5 bar ±10%	BE M 15 H A 41 P01
2.0 bar ±10%	BE M 20 H A 41 P01

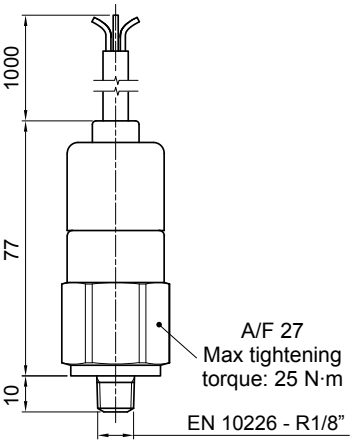

Hydraulic symbol

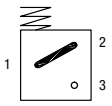

Electrical symbol

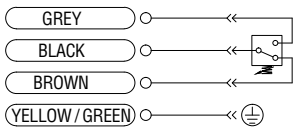

Materials
- Body: Brass
- Base: Black Nylon
- Contacts: Silver
- Seal: HNBR

Technical data
- Max working pressure: 40 bar
- Proof pressure: 60 bar
- Working temperature: From -25 °C to +80 °C
- Compatibility with fluids: Mineral oils, Synthetic fluids HFA, HFB, HFC according to ISO 2943
- Degree of protection: IP67 according to EN 60529

Electrical data
- Electrical connection: Four-core cable
- Resistive load: 5 A / 14 Vdc
  4 A / 30 Vdc
  5 A / 125 Vac
  4 A / 250 Vac
- CE certification

On request this indicator can be provided with main connectors in use for wirings.

BL*51 - BL*52 - BL*53

Electrical/Visual Pressure Indicator

Settings	Ordering code
1.5 bar ±10%	BL A 15 H A xx P01
2.0 bar ±10%	BL A 20 H A xx P01

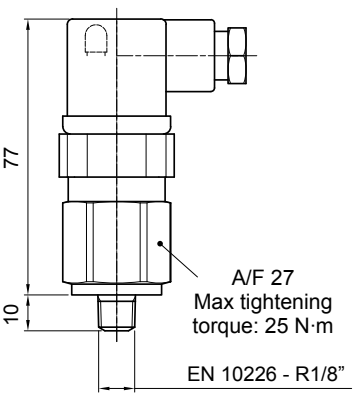

Hydraulic symbol

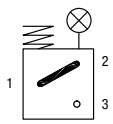

Electrical symbol

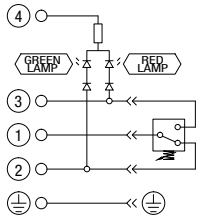

Materials
- Body: Brass
- Base: Transparent Nylon
- Contacts: Silver
- Seal: HNBR

Technical data
- Max working pressure: 40 bar
- Proof pressure: 60 bar
- Working temperature: From -25 °C to +80 °C
- Compatibility with fluids: Mineral oils, Synthetic fluids HFA, HFB, HFC according to ISO 2943
- Degree of protection: IP65 according to EN 60529

Electrical data

- Electrical connection:	EN 175301-803		
- Type	51	52	53
- Lamps	24 Vdc	110 Vdc	230 Vac
- Resistive load:	1 A / 24 Vdc	1 A / 110 Vdc	1 A / 230 Vac

BAROMETRIC INDICATORS

Dimensions

BL*71

Electrical/Visual Pressure Indicator

Settings	Ordering code
1.5 bar ±10%	BL A 15 H A 71 P01
2.0 bar ±10%	BL A 20 H A 71 P01

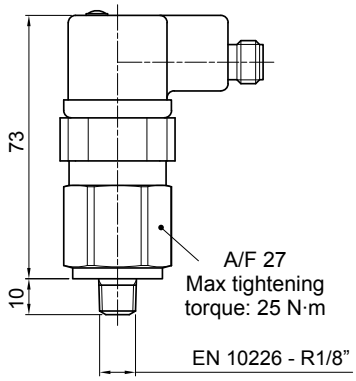

Hydraulic symbol

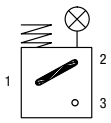

Electrical symbol

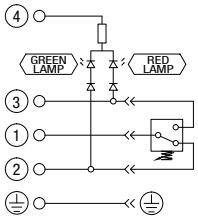

Materials

- Body: Brass
- Base: Black Nylon
- Contacts: Silver
- Seal: HNBR

Technical data

- Max working pressure: 40 bar
- Proof pressure: 60 bar
- Working temperature: From -25 °C to +80 °C
- Compatibility with fluids: Mineral oils, Synthetic fluids HFA, HFB, HFC according to ISO 2943
- Degree of protection: IP65 according to EN 60529

Electrical data

- Electrical connection: IEC 61076-2-101 D (M12)
- Lamps: 24 Vdc
- Resistive load: 0.4 A / 24 Vdc

BVA

Axial Pressure Gauge

Settings	Ordering code
1.4 bar ±10%	BV A 14 P01
2.5 bar ±10%	BV A 25 P01

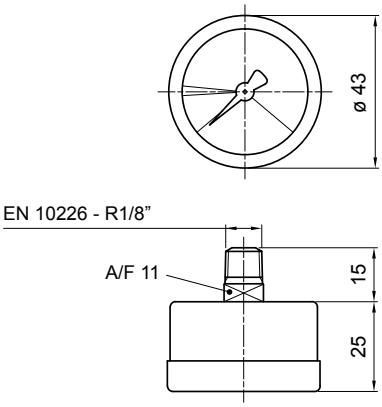

Hydraulic symbol



Dial scale

BV A 14 P01

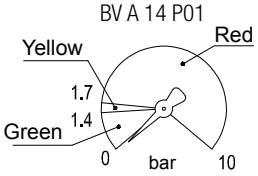

BV A 25 P01

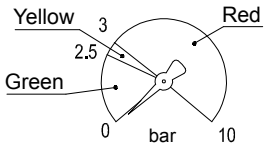

Materials

- Case: Painted Steel
- Window: Transparent plastic
- Dial: Painted Steel
- Pointer: Painted Aluminium
- Pressure connection: Brass
- Pressure element: Bourdon tube Cu-alloy soft soldered

Technical data

- Max working pressure: Static: 7 bar Fluctuating: 6 bar Short time: 10 bar
- Working temperature: From -40 °C to +60 °C
- Compatibility with fluids: Mineral oils, Synthetic fluids HFA, HFB, HFC according to ISO 2943
- Accuracy: Class 2.5 according to EN 13190
- Degree of protection: IP31 according to EN 60529

BVR

Radial Pressure Gauge

Settings	Ordering code
1.4 bar ±10%	BV R 14 P01
2.5 bar ±10%	BV R 25 P01

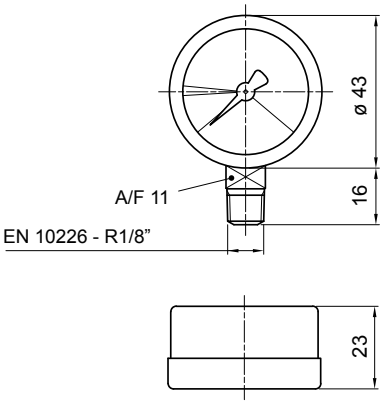

Hydraulic symbol



Dial scale

BV R 14 P01

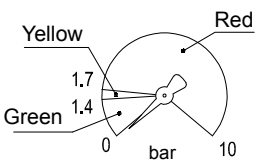

BV R 25 P01

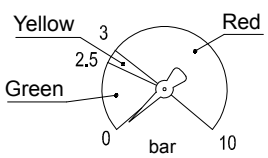

Materials

- Case: Painted Steel
- Window: Transparent plastic
- Dial: Painted Steel
- Pointer: Painted Aluminium
- Pressure connection: Brass
- Pressure element: Bourdon tube Cu-alloy soft soldered

Technical data

- Max working pressure: Static: 7 bar Fluctuating: 6 bar Short time: 10 bar
- Working temperature: From -40 °C to +60 °C
- Compatibility with fluids: Mineral oils, Synthetic fluids HFA, HFB, HFC according to ISO 2943
- Accuracy: Class 2.5 according to EN 13190
- Degree of protection: IP31 according to EN 60529

BVP - BVQ

Visual Pressure Indicator

Setting	Ordering code
1.5 bar ±10%	BV P 15 H P01
	BV Q 15 H P01
2.0 bar ±10%	BV P 20 H P01
	BV Q 20 H P01

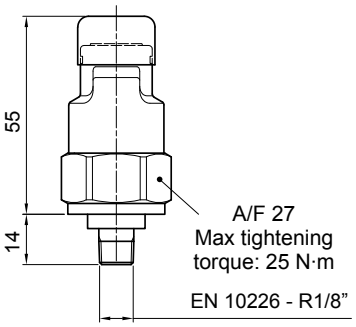

Hydraulic symbol

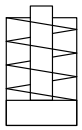

Materials

- Body: Brass
- Cover / internal parts: Nylon
- Caps: VMQ
- Seal: HNBR

Technical data

- Reset: BVP - Automatic reset; BVQ - Manual reset
- Max working pressure: 10 bar
- Proof pressure: 15 bar
- Working temperature: From -25 °C to +80 °C
- Compatibility with fluids: Mineral oils, Synthetic fluids HFA, HFB, HFC according to ISO 2943
- Degree of protection: IP45 according to EN 60529

Signals

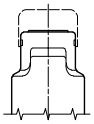

Absence of pressure (no indicator)

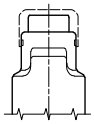

Presence of pressure (green button rises gradually)

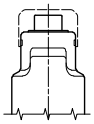

Clogged filter element (red button risen)

DESIGNATION & ORDERING CODE

Configuration example 1:	BE	M	15	H	A	41	P01
Configuration example 2:	BL	A	20	H	A	71	P01
Configuration example 3:	BV	R	14				P01
Configuration example 4:	BV	P	20	H			P01

Series

BE Electrical pressure indicator
BL Electrical/Visual pressure indicator
BV Visual pressure indicator

Type	BE	BL	BV
A Standard type	•	•	
M With wired electrical connection	•		
A Axial connection pressure gauge			•
R Radial connection pressure gauge			•
P Visual indicator with automatic reset			•
Q Visual indicator with manual reset			•

Pressure setting	BEA-BEM	BLA	BVA-BVR	BVP-BVQ
14 1.4 bar			•	
15 1.5 bar	•	•		
20 2.0 bar	•	•		•
25 2.5 bar			•	

Seals	BE	BLA	BVA-BVR	BVP-BVQ
H HNBR	•	•		•

Thermostat	BEA-BEM	BLA	BV
A Without	•	•	

Electrical connections	BEA	BEM	BL	BV
41 Connection via four-core cable		•		
50 Connection EN 175301-803	•			
51 Connection EN 175301-803, transparent base with lamps 24 Vdc			•	
52 Connection EN 175301-803, transparent base with lamps 110 Vdc			•	
53 Connection EN 175301-803, transparent base with lamps 230 Vdc			•	
71 Connection IEC 61076-2-101 D (M12), black base with lamps 24 Vdc			•	

Option

P01 MP Filtri standard
Pxx Customized

Dimensions

DEA*50

Electrical Differential Indicator

Settings	Ordering code
2.0 bar ±10%	DE A 20 x A 50 P01

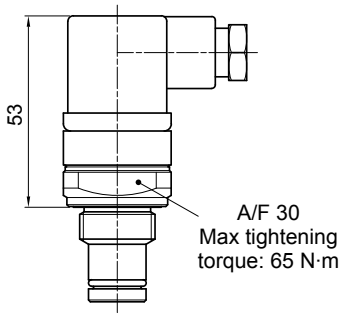

Hydraulic symbol

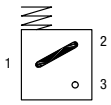

Electrical symbol

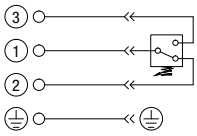

Materials
- Body: Brass
- Base: Black Nylon
- Contacts: Silver
- Seal: HNBR - FPM

Technical data
- Max working pressure: 420 bar
- Proof pressure: 630 bar
- Burst pressure: 1260 bar
- Working temperature: From -25 °C to +110 °C
- Compatibility with fluids: Mineral oils, Synthetic fluids HFA, HFB, HFC according to ISO 2943
- Degree protection: IP66 according to EN 60529 IP69K according to ISO 20653

Electrical data
- Electrical connection: EN 175301-803
- Resistive load: 0.2 A / 115 Vdc

DEM*10

Electrical Differential Indicator

Settings	Ordering code
2.0 bar ±10%	DE M 20 xx 10 P01

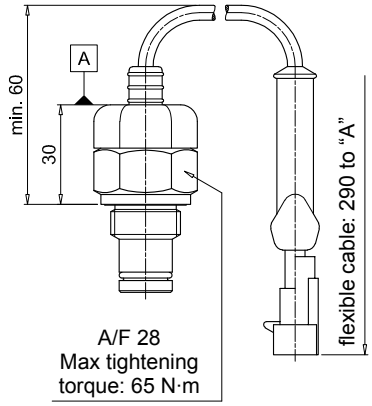

Hydraulic symbol

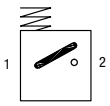

Electrical symbol

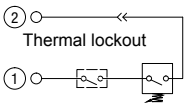

Materials
- Body: Brass
- Base: Black Nylon
- Contacts: Silver
- Seal: HNBR - FPM

Technical data
- Max working pressure: 420 bar
- Proof pressure: 630 bar
- Burst pressure: 1260 bar
- Working temperature: From -25 °C to +110 °C
- Compatibility with fluids: Mineral oils, Synthetic fluids HFA, HFB, HFC according to ISO 2943
- Degree protection: IP66 according to EN 60529

Electrical data
- Electrical connection: AMP Superseal series 1.5
- Resistive load: 0.2 A / 115 Vdc
- Switching type: Normally open contacts (NC on request)
- Thermal lockout: Normally open up to 30 °C (option "F")

DEM*20

Electrical Differential Indicator

Settings	Ordering code
2.0 bar ±10%	DEM20xx20P01

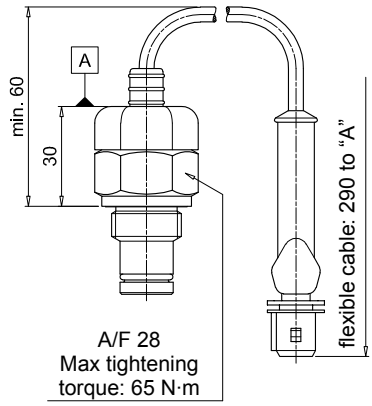

Hydraulic symbol

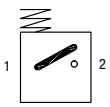

Electrical symbol

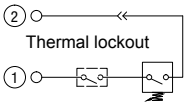

Materials
- Body: Brass
- Base: Black Nylon
- Contacts: Silver
- Seal: HNBR - FPM

Technical data
- Max working pressure: 420 bar
- Proof pressure: 630 bar
- Burst pressure: 1260 bar
- Working temperature: From -25 °C to +110 °C
- Compatibility with fluids: Mineral oils, Synthetic fluids HFA, HFB, HFC according to ISO 2943
- Degree protection: IP66 according to EN 60529

Electrical data
- Electrical connection: AMP Time junior
- Resistive load: 0.2 A / 115 Vdc
- Switching type: Normally open contacts (NC on request)
- Thermal lockout: Normally open up to 30 °C (option "F")

DEM*30

Electrical Differential Indicator

Settings	Ordering code
2.0 bar ±10%	DE M 20 xx 30 P01

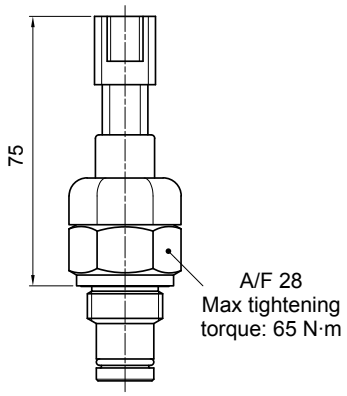

Hydraulic symbol

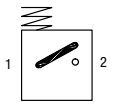

Electrical symbol

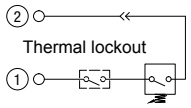

Materials

- Body: Brass
- Base: Black Nylon
- Contacts: Silver
- Seal: HNBR - FPM

Technical data

- Max working pressure: 420 bar
- Proof pressure: 630 bar
- Burst pressure: 1260 bar
- Working temperature: From -25 °C to +110 °C
- Compatibility with fluids: Mineral oils, Synthetic fluids HFA, HFB, HFC according to ISO 2943
- Degree protection: IP66 according to EN 60529

Electrical data

- Electrical connection: Deutsch DT-04-2-P
- Resistive load: 0.2 A / 115 Vdc
- Switching type: Normally open contacts (NC on request)
- Thermal lockout: Normally open up to 30 °C (option “F”)

DEM*35

Electrical Differential Indicator

Settings	Ordering code
2.0 bar ±10%	DE M 20 xx 35 P01

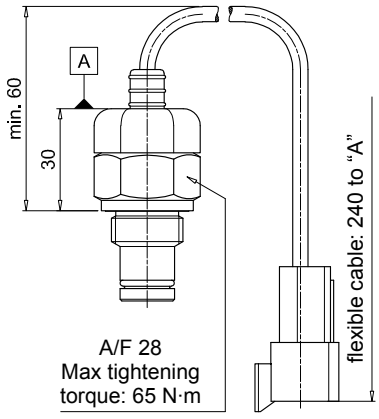

Hydraulic symbol

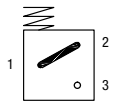

Electrical symbol

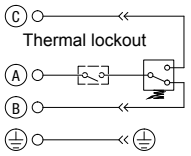

Materials

- Body: Brass
- Base: Black Nylon
- Contacts: Silver
- Seal: HNBR - FPM

Technical data

- Max working pressure: 420 bar
- Proof pressure: 630 bar
- Burst pressure: 1260 bar
- Working temperature: From -25 °C to +110 °C
- Compatibility with fluids: Mineral oils, Synthetic fluids HFA, HFB, HFC according to ISO 2943
- Degree protection: IP66 according to EN 60529

Electrical data

- Electrical connection: Deutsch DT-04-3-P
- Resistive load: 0.2 A / 115 Vdc
- Switching type: SPDT contact
- Thermal lockout: Normally open up to 30 °C (option “F”)

DLA*51 - DLA*52

Electrical/Visual Differential Indicator

Settings	Ordering code
2.0 bar ±10%	DL A 20 x A xx P01

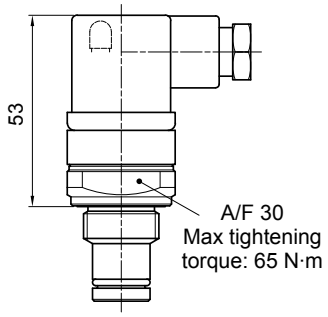

Hydraulic symbol

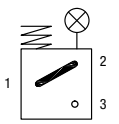

Electrical symbol

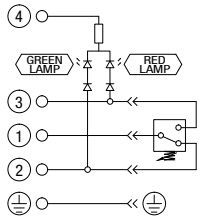

Materials

- Body: Brass
- Base: Transparent Nylon
- Contacts: Silver
- Seal: HNBR - FPM

Technical data

- Max working pressure: 420 bar
- Proof pressure: 630 bar
- Burst pressure: 1260 bar
- Working temperature: From -25 °C to +110 °C
- Compatibility with fluids: Mineral oils, Synthetic fluids HFA, HFB, HFC according to ISO 2943
- Degree protection: IP66 according to EN 60529 IP69K according to ISO 20653

Electrical data

- Electrical connection:	EN 175301-803	
- Type	51	52
- Lamps	24 Vdc	110 Vdc
- Resistive load:	1 A / 24 Vdc	1 A / 110 Vdc

DLA*71

Electrical/Visual Differential Indicator

Settings	Ordering code
2.0 bar ±10%	DL A 20 x A 71 P01

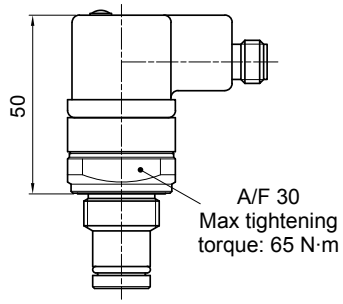

Hydraulic symbol

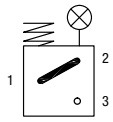

Electrical symbol

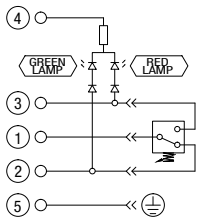

Materials
- Body: Brass
- Base: Black Nylon
- Contacts: Silver
- Seal: HNBR - FPM

Technical data
- Max working pressure: 420 bar
- Proof pressure: 630 bar
- Burst pressure: 1260 bar
- Working temperature: From -25 °C to +110 °C
- Compatibility with fluids: Mineral oils, Synthetic fluids HFA, HFB, HFC according to ISO 2943
- Degree protection: IP65 according to EN 60529 IP69K according to ISO 20653

Electrical data
- Electrical connection: IEC 61076-2-101 D (M12)
- Lamps 24 Vdc
- Resistive load: 0.4 A / 24 Vdc

DLE*A50

Electrical/Visual Differential Indicator

Settings	Ordering code
2.0 bar ±10%	DL E 20 x A 50 P01

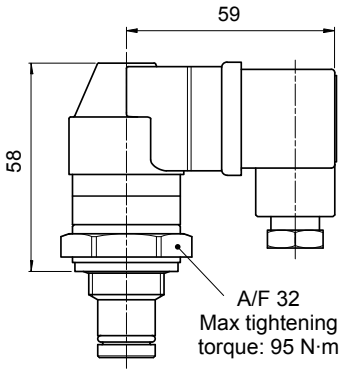

Hydraulic symbol

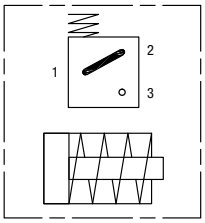

Electrical symbol

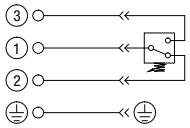

Materials
- Body: Brass
- Base: Black Nylon
- Contacts: Silver
- Seal: HNBR - FPM

Technical data
- Max working pressure: 420 bar
- Proof pressure: 630 bar
- Burst pressure: 1260 bar
- Working temperature: From -25 °C to +110 °C
- Compatibility with fluids: Mineral oils, Synthetic fluids HFA, HFB, HFC according to ISO 2943
- Degree protection: IP65 according to EN 60529

Electrical data
- Electrical connections: EN 175301-803
- Resistive load: 5 A / 250 Vac
- Available the connector with lamps

DLE*F50

Electrical/Visual Differential Indicator

Settings	Ordering code
2.0 bar ±10%	DL E 20 x F 50 P01

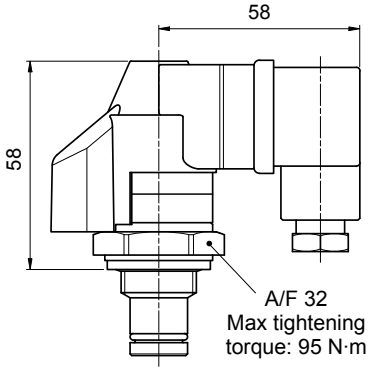

Hydraulic symbol

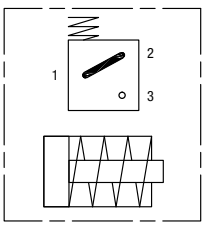

Electrical symbol

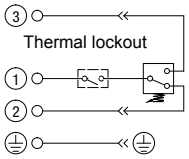

Materials
- Body: Brass
- Base: Black Nylon
- Contacts: Silver
- Seal: HNBR - FPM

Technical data
- Max working pressure: 420 bar
- Proof pressure: 630 bar
- Burst pressure: 1260 bar
- Working temperature: From -25 °C to +110 °C
- Compatibility with fluids: Mineral oils, Synthetic fluids HFA, HFB, HFC according to ISO 2943
- Degree protection: IP65 according to EN 60529

Electrical data
- Electrical connections: EN 175301-803
- Resistive load: 5 A / 250 Vac
- Thermal lockout setting: +30 °C

DTA*70

Electronic Differential Indicator

Settings	Ordering code
2.0 bar ±10%	DT A 20 x x 70 P01

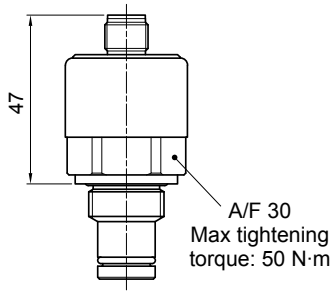

Hydraulic symbol

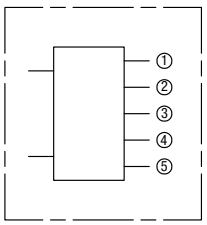

Electrical symbol

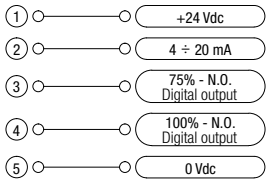

Materials
- Body: Brass
- Internal parts: Brass - Nylon
- Contacts: Silver
- Seal: HNBR - FPM

Industry 4.0 READY

Technical data
- Max working pressure: 420 bar
- Proof pressure: 630 bar
- Burst pressure: 1260 bar
- Compatibility with fluids: Mineral oils, Synthetic fluids HFA, HFB, HFC according to ISO 2943
- Degree protection: IP67 according to EN 60529

Electrical data
- Electrical connection: IEC 61076-2-101 D (M12)
- Power supply: 24 Vdc
- Analogue output: From 4 to 20 mA
- Thermal lockout: 30 °C (all output signals stalled up to 30 °C)

DVA

Visual Differential Indicator

Settings	Ordering code
2.0 bar ±10%	DV A 20 x P01

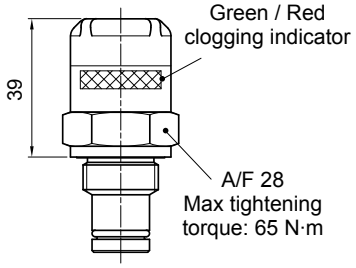

Hydraulic symbol

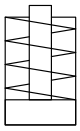

Materials
- Body: Brass
- Internal parts: Brass - Nylon
- Contacts: Silver
- Seal: HNBR - FPM

Technical data
- Reset: Automatic reset
- Max working pressure: 420 bar
- Proof pressure: 630 bar
- Burst pressure: 1260 bar
- Working temperature: From -25 °C to +110 °C
- Compatibility with fluids: Mineral oils, Synthetic fluids HFA, HFB, HFC according to ISO 2943
- Degree protection: IP65 according to EN 60529

DVM

Visual Differential Indicator

Settings	Ordering code
2.0 bar ±10%	DV M 20 x P01

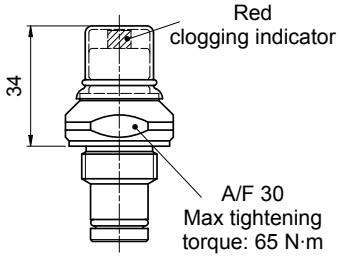

Hydraulic symbol

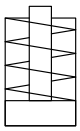

Materials
- Body: Brass
- Internal parts: Brass - Nylon
- Contacts: Silver
- Seal: HNBR - FPM

Technical data
- Reset: Manual reset
- Max working pressure: 420 bar
- Proof pressure: 630 bar
- Burst pressure: 1260 bar
- Working temperature: From -25 °C to +110 °C
- Compatibility with fluids: Mineral oils, Synthetic fluids HFA, HFB, HFC according to ISO 2943
- Degree protection: IP65 according to EN 60529

Dimensions

T2

Indicator plug

Seal	Ordering code
HNBR	T2 H
FPM	T2 V

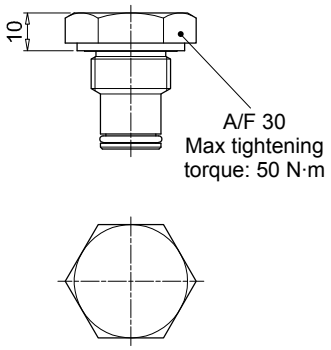

Materials

- Body: Phosphatized steel
- Seal: HNBR / FPM

DESIGNATION & ORDERING CODE - DIFFERENTIAL INDICATORS

Configuration example 1:	DE	M	20	H	F	50	P01
Configuration example 2:	DL	E	20	V	A	71	P01
Configuration example 3:	DT	A	20	H	F	70	P01
Configuration example 4:	DV	M	20	V			P01

Series

- **DE** Electrical differential indicator
- **DL** Electrical/Visual differential indicator
- **DT** Electronic differential indicator
- **DV** Visual differential indicator

Type

	DE	DL	DT	DV
A Standard type	•	•	•	
M With wired electrical connection	•			
E For high power supply		•		

DV:
- **A** With automatic reset
- **M** With manual reset

Pressure setting

- **20** 2.0 bar

Seals

- **H** HNBR
- **V** FPM

Thermostat

	DEA	DEM	DLA	DLE	DT	DV
A Without	•	•	•	•		
F With thermostat		•		•	•	

Electrical connections

	DEA	DEM	DLA	DLE	DT	DV
10 Connection AMP Superseal series 1.5		•				
20 Connection AMP Timer Junior		•				
30 Connection Deutsch DT-04-2-P		•				
35 Connection Deutsch DT-04-3-P		•				
50 Connection EN 175301-803	•			•		
51 Connection EN 175301-803, transparent base with lamps 24 Vdc			•			
52 Connection EN 175301-803, transparent base with lamps 110 Vdc			•			
70 Connection IEC 61076-2-101 D (M12)					•	
71 Connection IEC 61076-2-101 D (M12), black base with lamps 24 Vdc			•			

Option

- **P01** MP Filtri standard
- **Pxx** Customized

DESIGNATION & ORDERING CODE - DIFFERENTIAL INDICATOR PLUG

Configuration example	T2	H

Series

- **T2** Indicator plug

Seals

- **H** HNBR
- **V** FPM

Accessories

NYLON EXTENSION TUBE

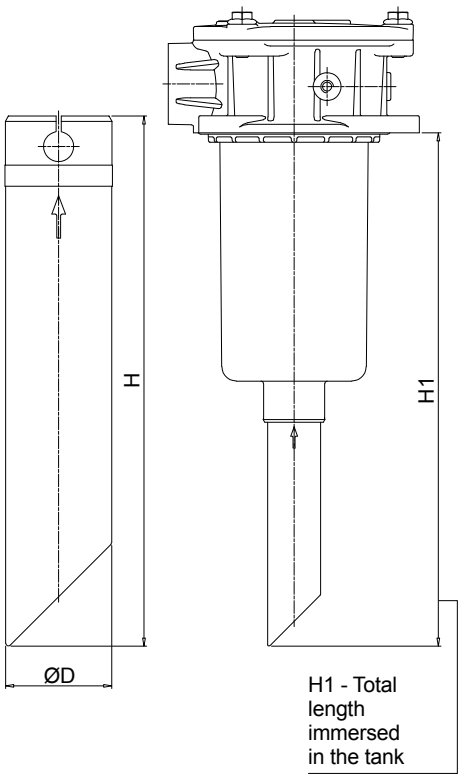

Configuration example: TE | 40 | A | 250

Series
TE

Size	ø D [mm]
25	25
32	32
40	40

Material	
A	Nylon

Length	H [mm]
200	200
250	250
300	300
350	350
400	400
450	450
500	500

COMPATIBILITY TABLE

Filter series	Filter size			Filter length	TE25	TE32	TE40	Tube length H1 [mm] 200	250	300	350	400	450	500
MPF - MPFX	30			1	•			266	316	366	416	466	516	566
MPF	100	104	110	1		•		275	325	375	425	475	525	575
				2				322	372	422	472	522	572	622
				3			•	400	450	500	550	600	650	700
				4				502	552	602	652	702	752	802
MPFX	100	104	110	1			•	277	327	377	427	477	527	577
				2				322	372	422	472	522	572	622
				3				400	450	500	550	600	650	700
				4				502	552	602	652	702	752	802
MPF MPFX	181	182	184	1			•	410	460	510	560	610	660	710
				2				623	673	723	773	823	873	923
MPT MPTX	025		027	1	•			278	328	378	428	478	528	578
				2				342	392	442	492	542	592	642
				3				380	430	480	530	580	630	680
MPT	101	104	110	114	120	1		•		273	323	373	423	473	523	573
						2				320	370	420	470	520	570	620
						3			•	396	446	496	546	596	646	696
						4				498	548	598	648	698	748	798
MPTX	101	104	110	114	120	1			•	273	323	373	423	473	523	573
						2				318	368	418	468	518	568	618
						3				396	446	496	546	596	656	696
						4				498	548	598	648	698	748	798

STEEL EXTENSION TUBE

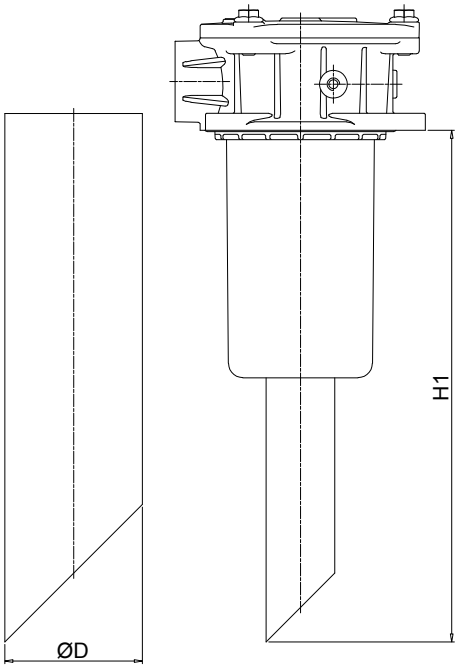

Configuration example: MPF191 | 2 | A | F1 | A10 | H | B | S60

Length	H1 [mm]
S30	300
S35	350
S40	400
S45	450
S50	500
S60	600
S70	700
S80	800
S90	900

COMPATIBILITY TABLE

Filter series	Filter size				Filter length	ø D [mm] 52	65
MPF	191	192	194		2	•	
	400	410	450	451	1	•	
					2		•
					3		
	750				1		•

DIFFUSER WITH FAST LOCK CONNECTION

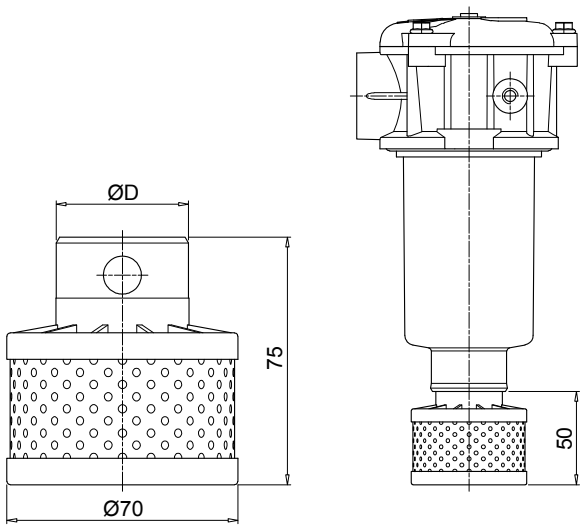

Configuration example: DFS | 32 | A | 075

Series
DFS

Size	ø D [mm]
32	32
40	40

Version	
A	Standard

Length	
075	Standard

COMPATIBILITY TABLE

Filter series	Filter size					Filter Length	DFS32	DFS40
MPF	100	104	110			1	•	
						2		
						3		•
						4		
MPFX	100	104	110			1		•
						2		
						3		
						4		
MPT	101	104	110	114	120	1	•	
						2		
						3		•
						4		
MPTX	101	104	110	114	120	1		•
						2		
						3		
						4		

DIPSTICK

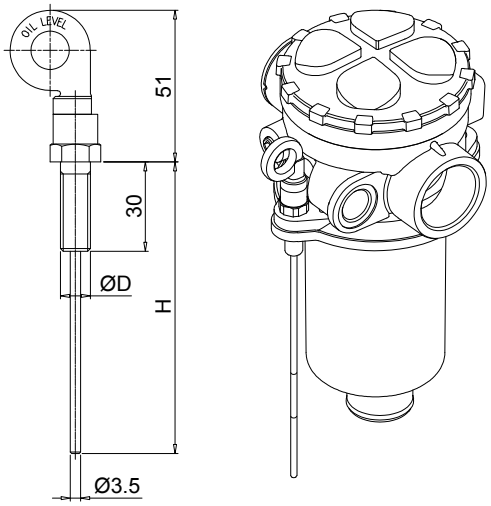

Materials
- Screw: phosphatized steel
- Stick: phosphatized steel
- Handle: Nylon

Technical data
Working temperature: from -25 °C to +110 °C

Configuration example: DPT | 20 | M10 | A | P01

Series
DPT

Length	H [mm]
15	134
20	184
25	234
30	284
35	334

Fastening	
M8	Fastening with screws ø D = M8
M10	Fastening with screws ø D = M10

Seals	
A	NBR
V	FPM

Execution	
P01	MP Filtri standard
Pxx	Customized

FILLER PLUG

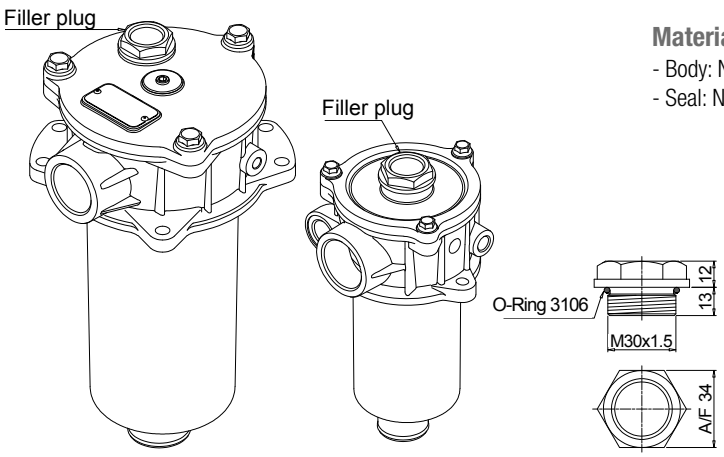

Materials
- Body: Nylon
- Seal: NBR

Technical data
Tightening torque:
15 N·m

For any further information, please, contact our commercial dept.

Hydraulic combined filters for installation on the return and suction lines of hydrostatic transmissions (HSTs) for commercial vehicles, construction machinery, agricultural vehicles, and mobile work equipment with hydrostatic drive.

Advantage for the installation:
- **Space-saving assembly**
- **Reduced assembly time**
- **Fewer connections to the tank**
- **Protection from the pollution of the tank**

Advantages for the operativity:
- **Absolute filtration of the oil for the hydrostatic drive**
- **Fulfilment of the purity requirements according to ISO 4406, as specified by the manufacturer of the driving drives.**
- **Protection against damages from cavitation even under adverse conditions, i.e. cold start**
- **Less formation of free air in the system**
- **Easier maintenance operations (one spare filter element instead of two)**

FILTER SIZING

For the proper corrective factor Y see chapter at page 24

Return / Suction filters



MRSX	page 253
LMP 124 MULTIPORT	265
INDICATORS	273

MYCLEAN

THE NEW FILTER CONCEPT

MRSX RSX series

NEW FILTER ELEMENT WITH EXCLUSIVE INTERFACE CONNECTION

- **Protects the machine from improper use of non-original products.**
- **Safety of constant quality protection & reliability**

With exclusive filter element you are sure that only MP Filtri filter elements can be used, ensuring the best cleaning level of the oil due to the use of originals filter elements.

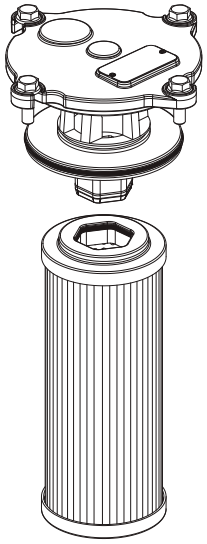

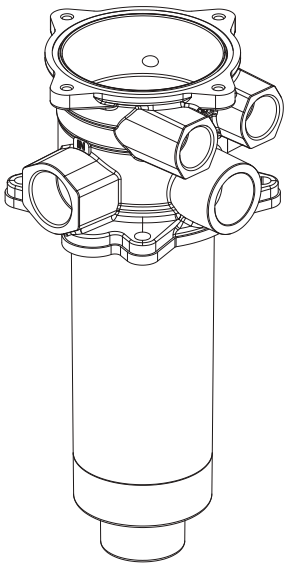

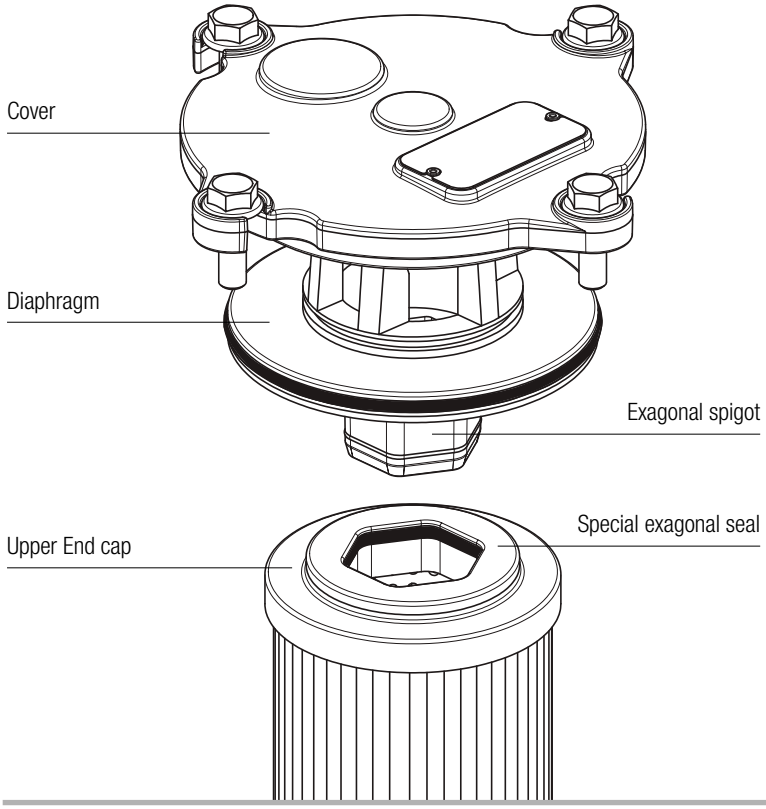

The products identified as MRSX and RSX are protected by:
Italian Patent n° 102014902261205
Canadian Patent n° 2,937,258

and by the following patent applications:
European Patent n° 16181725.9
US Patent Pending n° 15/224,337

MRSX series

Maximum working pressure up to 1 MPa (10 bar) - Flow rate up to 250 l/min



MRSX GENERAL INFORMATION

Description

Return / Suction filter | Tank mounted

Maximum working pressure up to 1 MPa (10 bar)
Flow rate up to 250 l/min

MRSX is a range of suction/return filters for hydraulic systems with two or more circuits (both open and closed loops). They are able to provide pressurized oil cleaned by fine filtration to the feed pump of the hydrostatic systems.
They are directly fixed to the reservoir, in immersed or semi-immersed position.
The filter output must be always immersed into the fluid to avoid aeration or foam generation into the reservoir.

Available features:
- Female threaded return connections up to 1 1/4", for a maximum return flow rate of 250 l/min
- Multiple connections, to connect several return and suction lines
- Fine filtration rating, to get a good cleanliness level into the reservoir
- Bypass valve to the tank, to relieve excessive pressure drop across the filter media when the return flow is enough higher than the suction flow
- Bypass valve to the suction line with additional suction filter element, to relieve excessive pressure drop across the filter media when the return flow is not enough higher than the suction flow
- De-pressurization valve, to reduce the pressure inside the filter during the maintenance operations
- Anti-cavitation valve with additional suction filter element, to ensure fluid to the feed pump of the hydrostatic systems during cold starts or initial filling
- O-ring or Flat Seal to suit a variety of reservoir surfaces
- Reservoir side mounting, to save space in the machines
- Visual, electrical and electronic clogging indicators
- MYclean interface connection, to protect the product against non-original spare parts
- External protective wrap, to optimize the flow through the element and to save the element efficiency against non-proper handling

Common applications:
Mobile machines with hydrostatic systems on board
(i.e. skid steer loaders, telehandlers, dumpers, road sweepers)

Technical data

Filter housing materials
- Head: Aluminium

- Cover
  Nylon: MRSX 116
  Aluminium: MRSX 165-166

- Bowl: Nylon

Δp element type
- RSX: 10 bar
- Oil flow from exterior to interior.

Seals
- Standard NBR series A
- Optional FPM series V

Temperature
From -25 °C to +110 °C

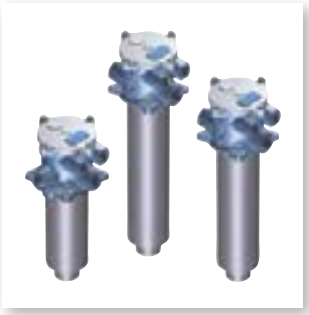

FILTER ASSEMBLY SIZING
Flow rates [l/min]

Filter series	Length	A10	A16	A25
	1	74	82	87
MRSX 116	2	108	113	124
	1	155	166	178
MRSX 165 - 166	2	187	196	200
	3	201	205	217

Maximum flow rate for a complete return/suction filter with a pressure drop Δp = 1 bar.
The reference fluid has a kinematic viscosity of 30 mm^2/s (cSt) and a density of 0.86 kg/dm^3.
For different pressure drop or fluid viscosity we recommend to use our selection software available on www.mpfiltri.com.
You can also calculate the right size using the formulas present on the FILTER SIZING paragraph at the beginning of the full catalogue or at the beginning of the filter family brochure.
Please, contact our Sales Department for further additional information.

Hydraulic symbols

Filter series MRSX 116

Valves A option

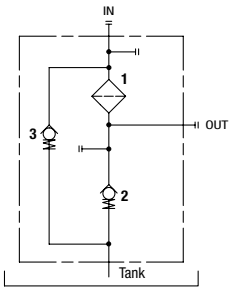

Valves B option

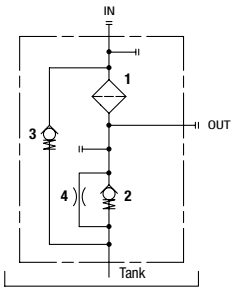

Valves C option

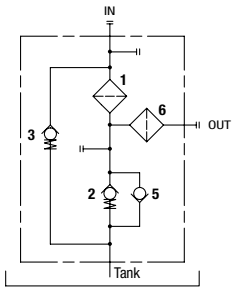

Valves D option

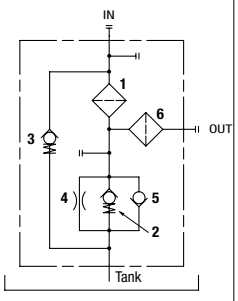

Valves E option

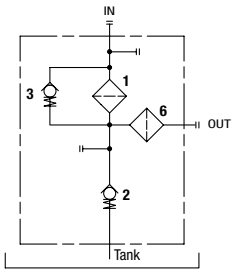

Valves F option

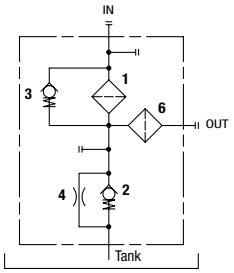

Valves G option

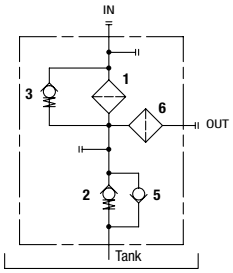

Valves H option

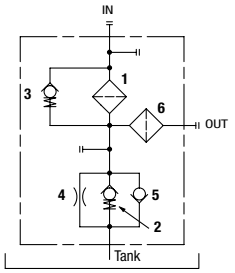

Valves I option

Suitable only for tank side-wall mounting

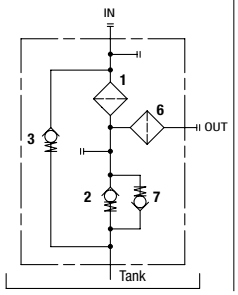

Valves M option

Suitable only for tank side-wall mounting

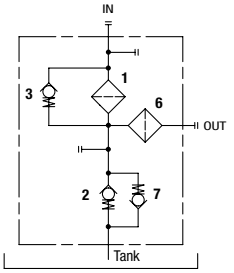

Filter series MRSX 165-166

Valves A option

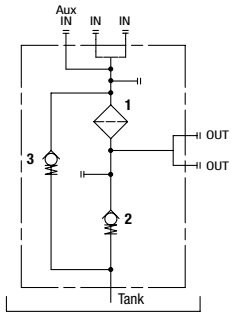

Valves B option

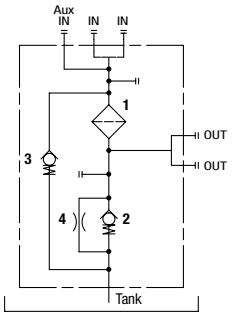

Valves C option

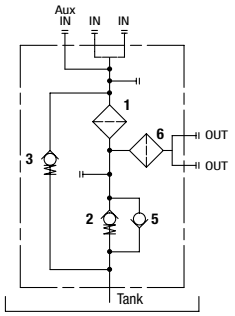

Valves D option

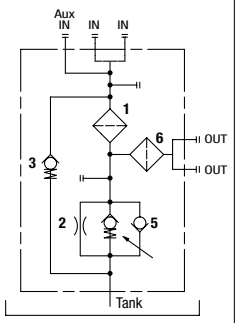

Valves E option

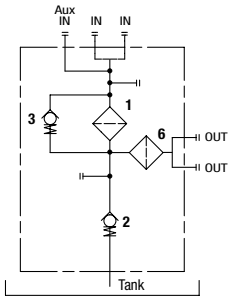

Valves F option

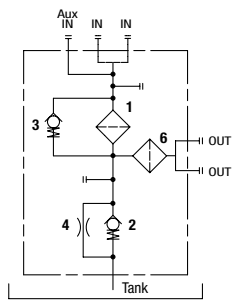

Valves G option

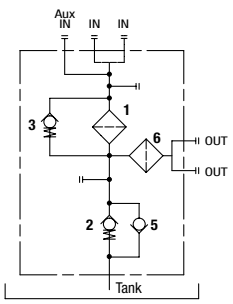

Valves H option

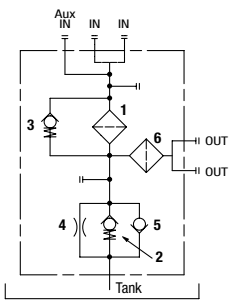

Valves I option

Suitable only for tank side-wall mounting

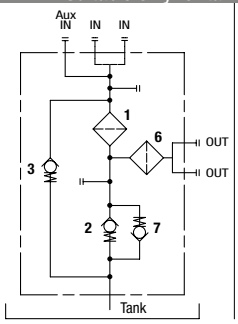

Valves M option

Suitable only for tank side-wall mounting

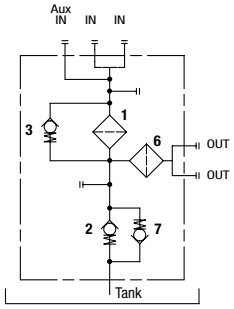

LEGEND

1 - Filter element
2 - Back-Pressure valve: opening pressure 0.5 bar ±10%
3 - Bypass valve: opening pressure 2.5 bar ±10%
4 - Depressurization valve
5 - Anti-Cavitation valve
6 - Safety filter element (wire mesh 60 µm)
7 - Anti-Cavitation valve / Anti-Emptying valve

Pressure drop

Filter housings Δp pressure drop

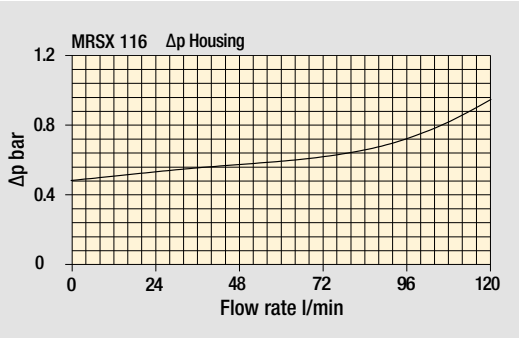

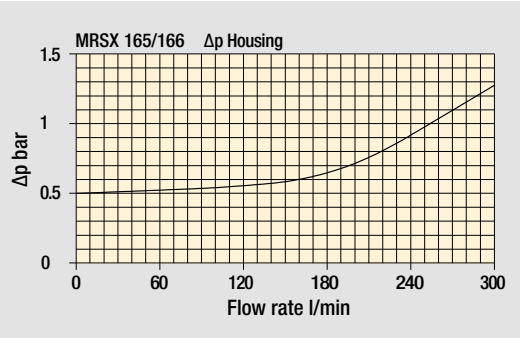

Bypass valve pressure drop

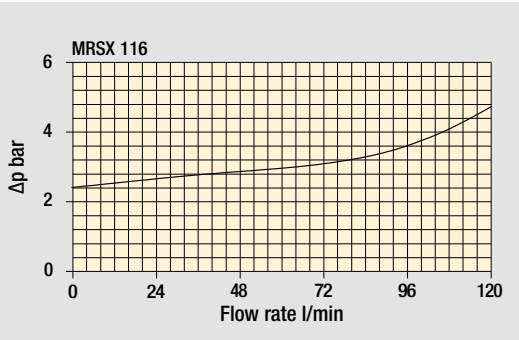

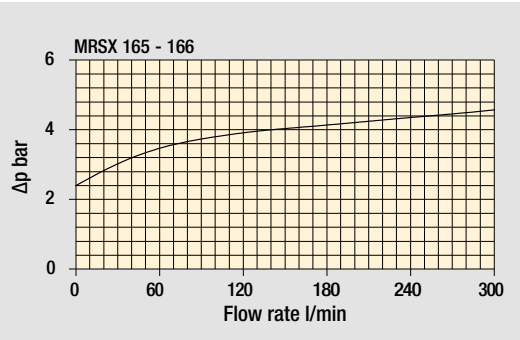

The curves are plotted using mineral oil with density of 0.86 kg/dm^3 in compliance with ISO 3968. Δp varies proportionally with density.

Weights [kg] and volumes [dm^3]

Filter series	Weights [kg]				Volumes [dm^3]			
	Length	1	2	3	Length	1	2	3
MRSX 116		1.30	1.40	-		0.80	1.00	-
MRSX 165		3.40	3.80	4.10		2.00	2.60	3.00
MRSX 166		3.40	3.80	4.10		2.00	2.60	3.00

MRSX MRSX116

Designation & Ordering code

COMPLETE FILTER

Configuration example: MRSX116 | 1 | B | A | G1 | 0 | A16 | B | P01

Series and size

MRSX116 Filter element with private spigot

Length

1 | **2**

Hydraulic diagram configuration - see page 257

				Bypass valve to tank	Bypass valve to OUT
A	**B**	**C**	**D**	•	
E	**F**	**G**	**H**		•
I				•	
M					•

Seals and treatments

A	NBR, O-Ring on head	**B**	NBR, flat seal on head
V	FPM, O-Ring on head	**D**	FPM, flat seal on head

Connections IN		Connections OUT
G1	G 3/4”	G 3/4”
G2	G 1”	G 1”
G3	3/4” NPT	3/4” NPT
G4	1” NPT	1” NPT
G5	SAE 12 - 1 1/16” - 12 UN	SAE 12 - 1 1/16” - 12 UN
G6	SAE 16 - 1 5/16” - 12 UN	SAE 16 - 1 5/16” - 12 UN
D1	G 1”	G 3/4”
D2	1” NPT	3/4” NPT
D3	SAE 16 - 1 5/16” - 12 UN	SAE 12 - 1 1/16” - 12 UN

Aux IN connection

0 Without aux IN connection

Filtration rating (filter media)

A10 Inorganic microfiber 10 µm
A16 Inorganic microfiber 16 µm
A25 Inorganic microfiber 25 µm

Valves configuration

Mounting position		A	B	C	D	E	F	G	H	I	M
S	Standard	•	•	•	•	•	•	•	•		
B	Tank side-wall mounting	•	•			•	•			•	•

Execution

P01 MP Filtri standard
Pxx Customized

FILTER ELEMENT

Configuration example: RSX116 | 1 | A16 | A | P01

Element series and size

RSX116 Filter element with private spigot

Element length

1 | **2**

Filtration rating (filter media)

A10 Inorganic microfiber 10 µm
A16 Inorganic microfiber 16 µm
A25 Inorganic microfiber 25 µm

Seals

A NBR
V FPM

Execution

P01 MP Filtri standard
Pxx Customized

ACCESSORIES

Indicators on Return Line		page			page
BVA	Axial pressure gauge	278	**BEA**	Electrical pressure indicator	276
BVR	Radial pressure gauge	278	**BEM**	Electrical pressure indicator	276
BVP	Visual pressure indicator with automatic reset	279	**BET**	Electrical pressure indicator	276-277
BVQ	Visual pressure indicator with manual reset	279	**BLA**	Electrical / visual pressure indicator	277-278

Indicators on Suction Line		page			page
VVB	Axial vacuum gauge	275	**VEB**	Electrical vacuum indicator	274
VVS	Radial vacuum gauge	275	**VLB**	Electrical / visual vacuum indicator	274

MRSX116		
Filter length	**H1 [mm]**	**H2 [mm]**
1	203	240
2	263	300

Connections	T
G1 - G2	G 1/8”
G3 - G4	1/8” NPT
G5 - G6	1/8” NPT
D1	G 1/8”
D2 - D3	1/8” NPT

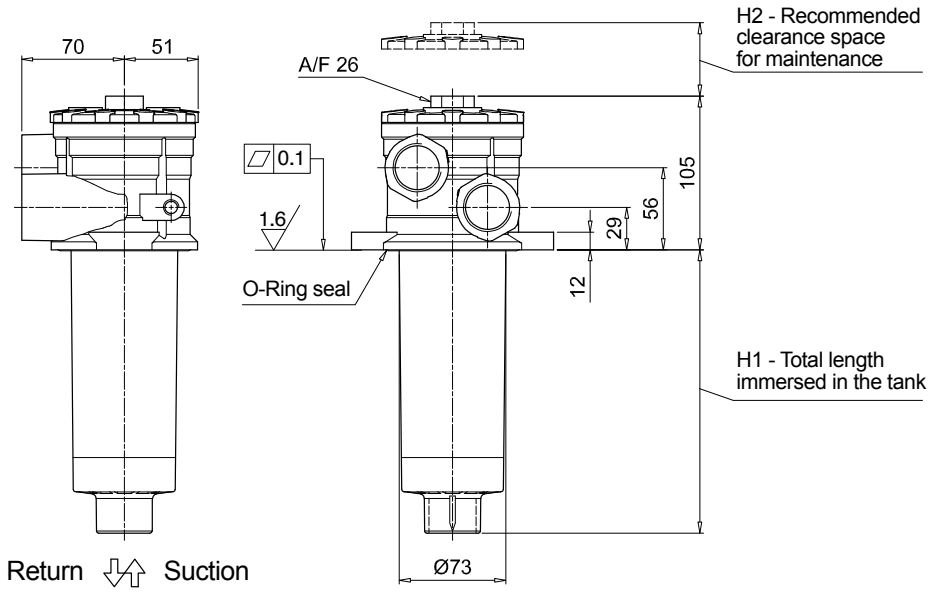

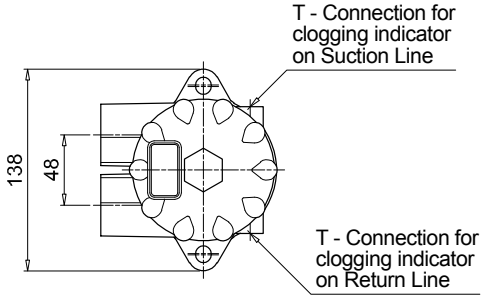

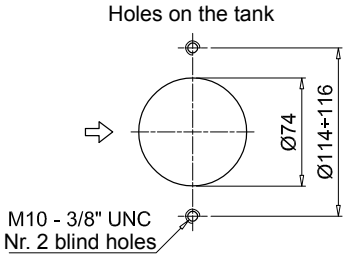

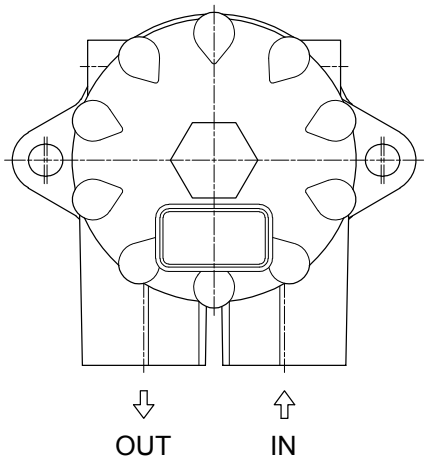

MRSX MRSX165 - MRSX166

Designation & Ordering code

COMPLETE FILTER

Configuration example: MRSX166 | 2 | C | V | G3 | 1 | A10 | S | P01

Series and size

MRSX165 | **MRSX166** Filter element with private spigot

Length

1 | **2** | **3**

Hydraulic diagram configuration - see page 257

		Bypass valve to tank	Bypass valve to OUT
A	**B**	•	
C	**D**	•	
E	**F**		•
G	**H**		•
I		•	
M			•

Seals and treatments

A	NBR, O-Ring on head	**B**	NBR, flat seal on head
V	FPM, O-Ring on head	**D**	FPM, flat seal on head

Connections

	IN (size 165)	IN (size 166)	Aux IN	OUT
G1	G 1 1/4”	G 1”	G 1 1/4”	G 1”
G2	1 1/4” NPT	1” NPT	1 1/4” NPT	1” NPT
G3	SAE 20 - 1 5/8” - 12 UN	SAE 16 - 1 5/16” - 12 UN	SAE 20 - 1 5/8” - 12 UN	SAE 16 - 1 5/16” - 12 UN

Aux IN connection

		MRSX 165	MRSX 166
0	Without aux IN connection	•	-
1	With aux IN connection - see previous table	•	•

Filtration rating (filter media)

A10 Inorganic microfiber 10 µm
A16 Inorganic microfiber 16 µm
A25 Inorganic microfiber 25 µm

Valves configuration

Mounting position	A	B	C	D	E	F	G	H	I	M
S Standard	•	•	•	•	•	•	•	•		
B Tank side-wall mounting	•	•			•	•			•	•

Execution

P01 MP Filtri standard
Pxx Customized

FILTER ELEMENT

Configuration example: RSX165 | 2 | A10 | V | P01

Element series and size

RSX165 Filter element with private spigot

Element length

1 | **2** | **3**

Filtration rating (filter media)

A10 Inorganic microfiber 10 µm
A16 Inorganic microfiber 16 µm
A25 Inorganic microfiber 25 µm

Seals

A NBR
V FPM

Execution

P01 MP Filtri standard
Pxx Customized

ACCESSORIES

Indicators on Return Line		page
BVA	Axial pressure gauge	278
BVR	Radial pressure gauge	278
BVP	Visual pressure indicator with automatic reset	279
BVQ	Visual pressure indicator with manual reset	279

		page
BEA	Electrical pressure indicator	276
BEM	Electrical pressure indicator	276
BET	Electrical pressure indicator	276-277
BLA	Electrical / visual pressure indicator	277-278

Indicators on Suction Line		page
VVB	Axial vacuum gauge	275
VVS	Radial vacuum gauge	275

		page
VEB	Electrical vacuum indicator	274
VLB	Electrical / visual vacuum indicator	274

MRSX165

Filter length	H1 [mm]	H2 [mm]
1	270	320
2	378	430
3	445	500

Connections	T
G1	G 1/8"
G2 - G3	1/8" NPT

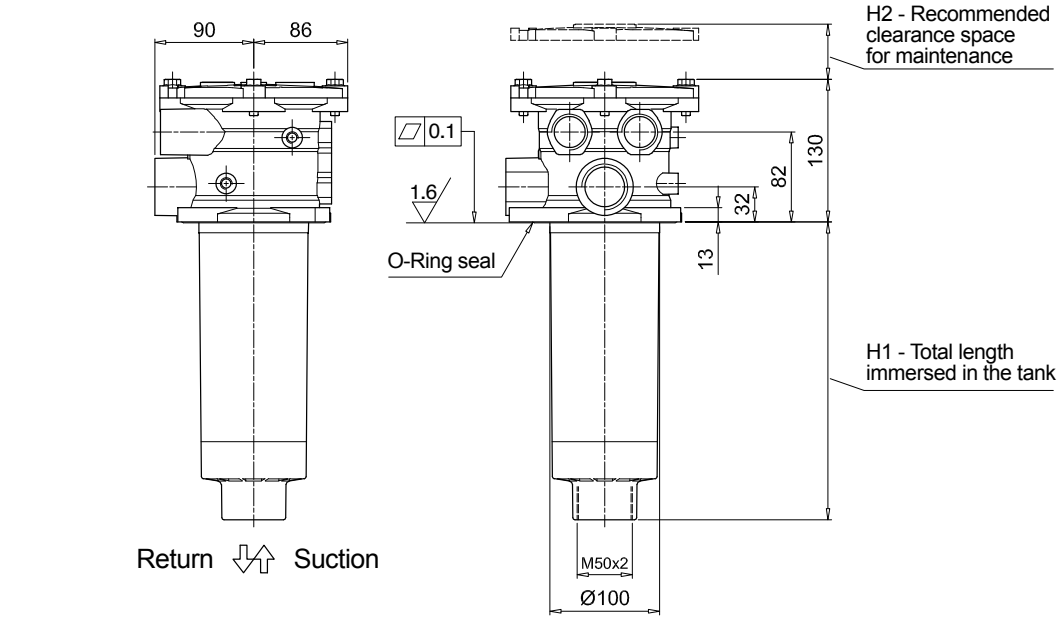

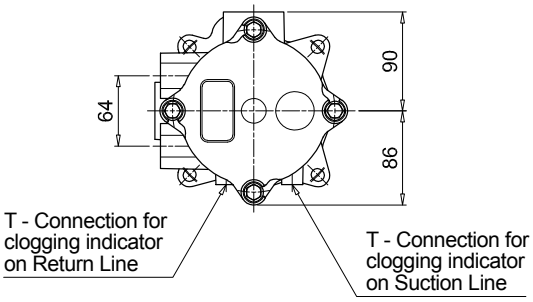

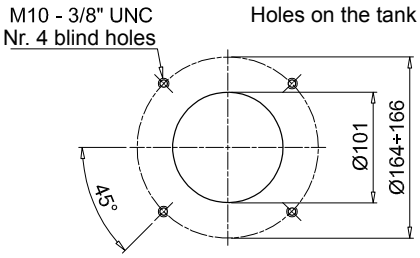

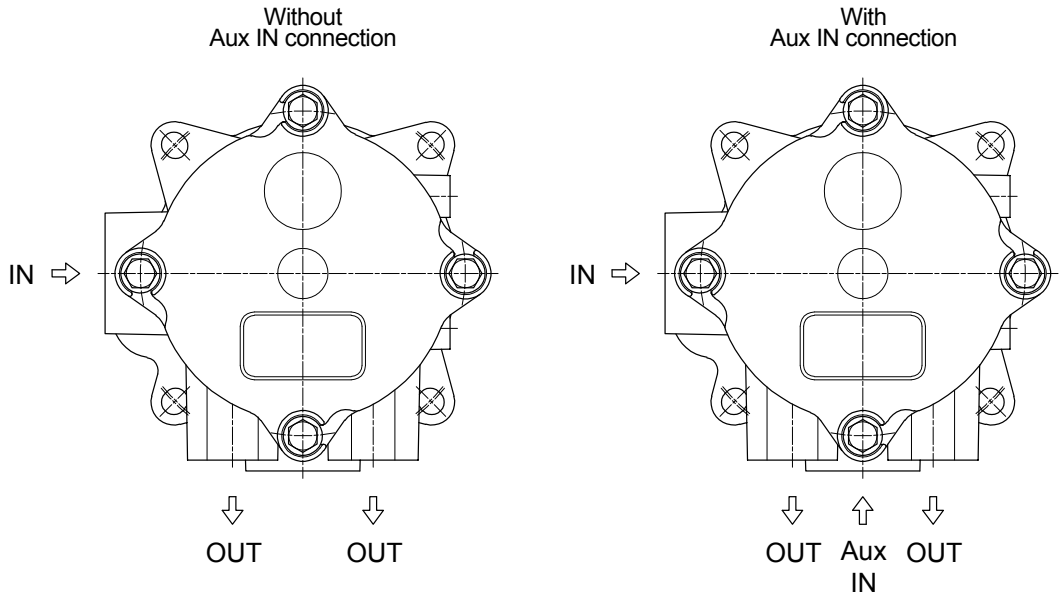

Dimensions

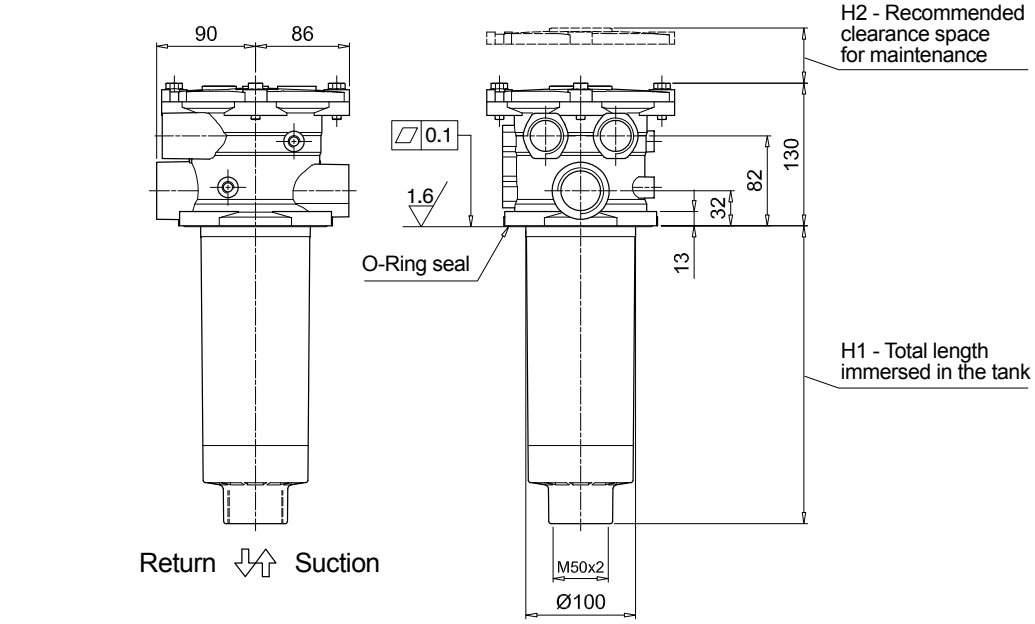

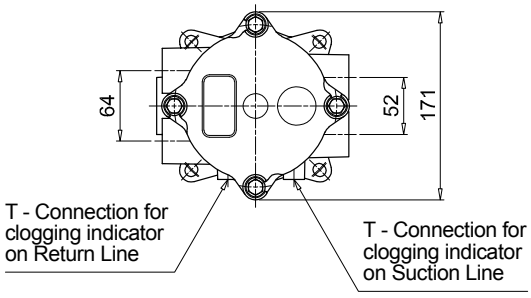

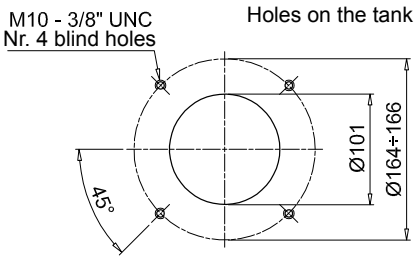

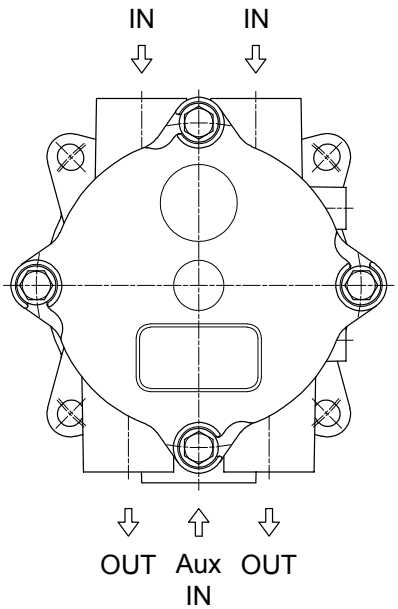

MRSX166

Filter length	H1 [mm]	H2 [mm]
1	270	320
2	378	430
3	445	500

Connections	T
G1	G 1/8"
G2 - G3	1/8" NPT

MRSX 116

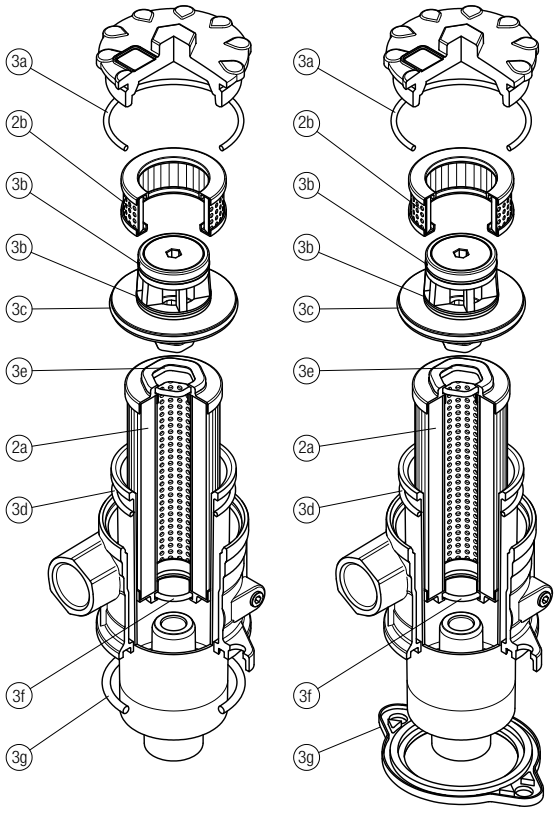

			O-RING SEAL		FLAT SEAL	
	Q.ty: 1 pc.	Q.ty: 1 pc.	Q.ty: 1 pc.		Q.ty: 1 pc.	
Item:	**2a**	**2b**	**3** (3a ÷ 3g)		**3** (3a ÷ 3g)	
Filter series	**Filter element**	**Safety filter element**	**Seal Kit code number NBR**	**FPM**	**Seal Kit code number NBR**	**FPM**
MRSX 116	See order table	S116M60P01	02050617	02050619	02050618	02050620

MRSX 165 - 166

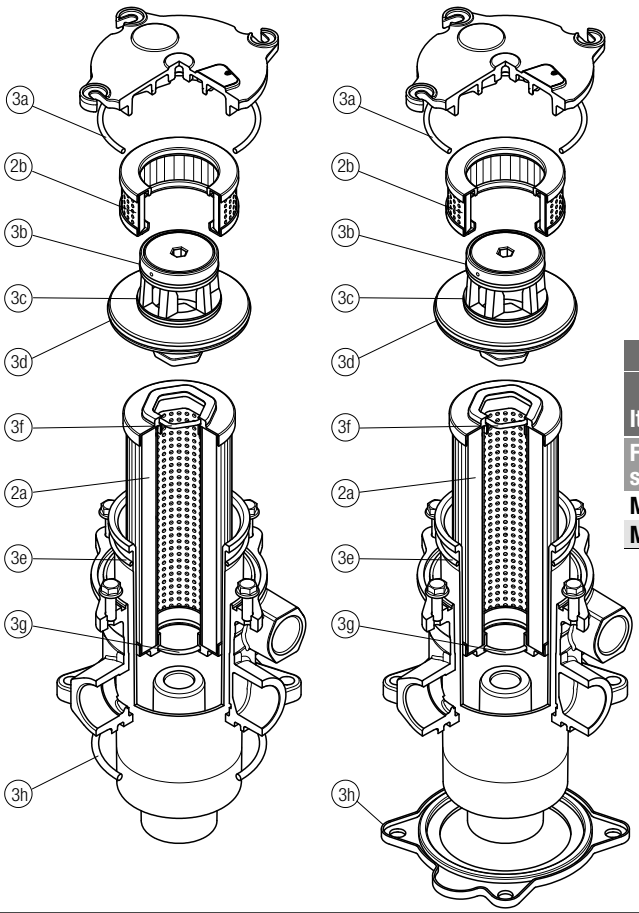

			O-RING SEAL		FLAT SEAL	
	Q.ty: 1 pc.	Q.ty: 1 pc.	Q.ty: 1 pc.		Q.ty: 1 pc.	
Item:	**2a**	**2b**	**3** (3a ÷ 3h)		**3** (3a ÷ 3h)	
Filter series	**Filter element**	**Safety filter element**	**Seal Kit code number NBR**	**FPM**	**Seal Kit code number NBR**	**FPM**
MRSX 165	See order table	S165M60P01	02050627	02050630	02050628	02050631
MRSX 166			02050627	02050630	02050629	02050632

LMP 124 series
MULTIPORT

Maximum working pressure up to 8 MPa (80 bar) - Flow rate up to 120 l/min



LMP 124 GENERAL INFORMATION
MULTIPORT

Description

Return / Suction filter | In-line

Maximum working pressure up to 8 MPa (80 bar)
Flow rate up to 120 l/min

LMP124 is a range of return/suction filters for hydraulic systems with two or more circuits (both open and closed loops). They are able to provide pressurized oil cleaned by fine filtration to the feed pump of the hydrostatic systems.
They are directly connected to the lines of the system through the hydraulic fittings.

Available features:
- Female threaded connections up to 1", for a maximum return flow rate of 120 l/min
- Fine filtration rating, to get a good cleanliness level into the reservoir
- Bypass valve to the tank, to relieve excessive pressure drop across the filter media when the return flow is enough higher than the suction flow
- Bypass valve to the suction line with additional suction filter element, to relieve excessive pressure drop across the filter media when the return flow is not enough higher than the suction flow
- De-pressurization valve, to reduce the pressure inside the filter during the maintenance operations
- Visual, electrical and electronic differential clogging indicators

Common applications:
Mobile machines with hydrostatic systems on board.
(i.e. skid steer loaders, telehandlers, dumpers, road sweepers)

Technical data

Filter housing materials
- Head: Aluminium
- Housing: Cataphoresis - Painted Steel
- Bypass valve: Brass - Aluminium

Pressure
- Test pressure: 12MPa (120 bar)
- Burst pressure: 38 MPa (380 bar)
- Pulse pressure fatigue test: 1 000 000 cycles with pressure from 0 to 80 bar (8 MPa)

Bypass valve
- Opening pressure 250 kPa (2.5 bar) ±10%
- Other opening pressures on request.

Δp element type
- Microfibre filter elements - series N - W: 20 bar
- Fluid flow through the filter element from OUT to IN.

Seals
- Standard NBR series A
- Optional FPM series V

Temperature
From -25 °C to +110 °C

Note
LMP124 filters are provided for vertical mounting



Weights [kg] and volumes [dm³]

Filter series	Weights [kg]					Volumes [dm³]				
	Length	1	2	3	4	Length	1	2	3	4
LMP 124		1.70	1.90	2.20	2.70		0.75	0.81	1.11	1.53

FILTER ASSEMBLY SIZING
Flow rates [l/min]

Filter series	Length	Filter element design - N series							
		A03	A06	A10	A16	A25	M25 M60 M90	P10	P25
LMP 124	1	39	41	58	60	69	99	84	85
	2	47	53	68	69	77	99	90	91
	3	59	61	73	77	86	99	92	93
	4	70	78	84	86	93	100	94	95

Maximum flow rate for a complete return/suction filter with a pressure drop Δp = 1.2 bar.
The reference fluid has a kinematic viscosity of 30 mm^2/s (cSt) and a density of 0.86 kg/dm^3.
For different pressure drop or fluid viscosity we recommend to use our selection software available on www.mpfiltri.com.
You can also calculate the right size using the formulas present on the FILTER SIZING paragraph at the beginning of the full catalogue or at the beginning of the filter family brochure.
Please, contact our Sales Department for further additional information.

Hydraulic symbols - Multiport styles

Multiport	Valves C option	Valves D option	Valves E option	Valves F option



IN - Return
OUT 1 - Tank
OUT 2 - Pump

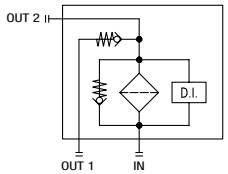

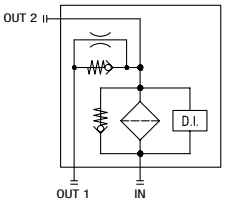

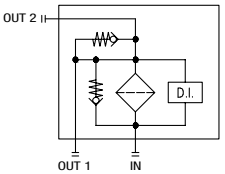

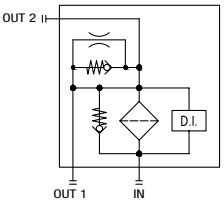

Multiport	Valves G option	Valves H option



IN - Return
OUT 1 - Tank
OUT 2 - Pump

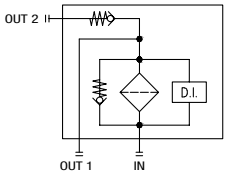

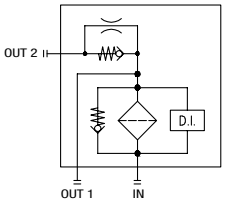

Pressure drop

Filter housings Δp pressure drop

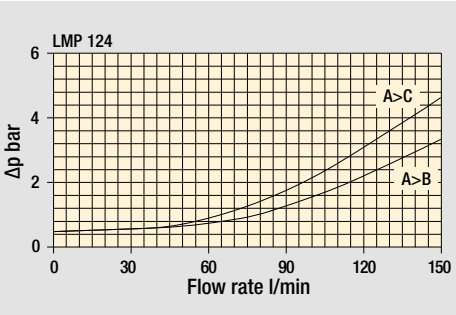

Bypass valve pressure drop

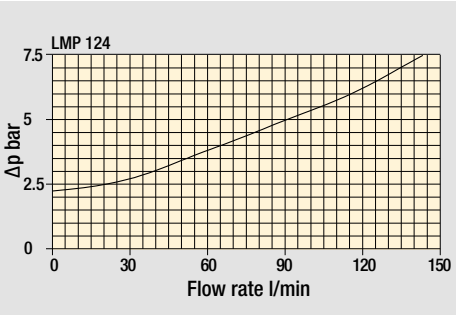

Valves

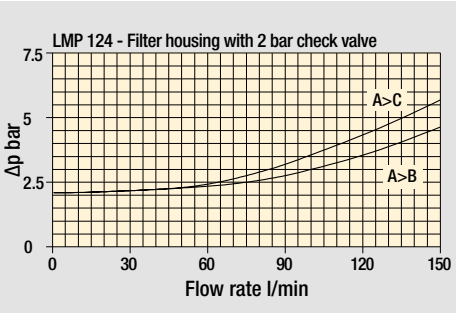

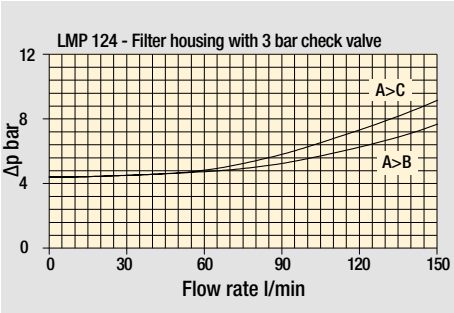

Filter length: **1 - 2 - 3 - 4**

STYLE **C - D - E - F**

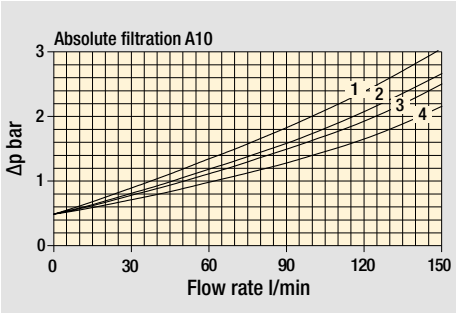

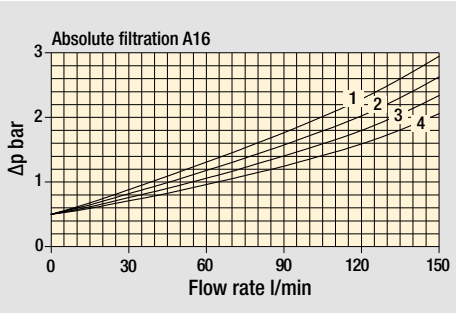

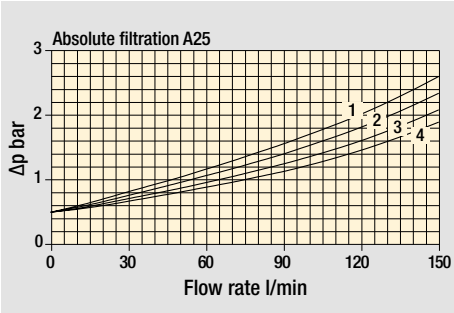

STYLE **G - H**

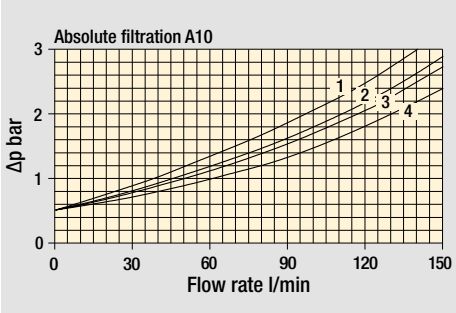

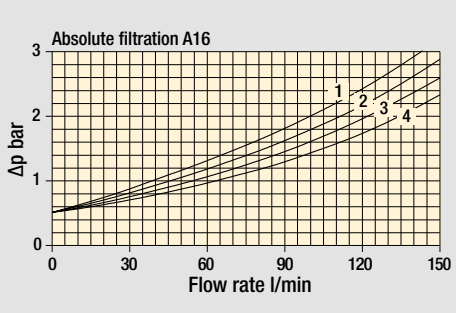

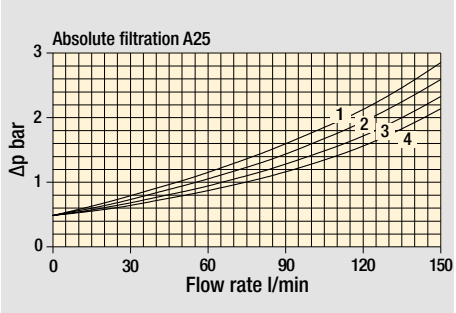

The curves are plotted using mineral oil with density of 0.86 kg/dm^3 in compliance with ISO 3968. Δp varies proportionally with density.

Designation & Ordering code

COMPLETE FILTER

Configuration example: LMP124 | 4 | C | A | F | 1 | A10 | N | P01

Series and size
LMP124

Filter length
1 | **2** | **3** | **4**

Hydraulic diagram configuration - see page 268
C | **D** | **E** | **F** | **G** | **H**

Seals and treatments		Filtration rating Axx	Mxx	Pxx
A	NBR	•	•	•
V	FPM	•	•	•
W	NBR compatible with fluids HFA-HFB-HFC	•	•	

Connections
B G 1”
F SAE 16 - 1 5/16” - 12 UN

Connection for indicator
1 Without
2 With connection G 1/8” for clogging indicator
3 With connection G 1/4” for clogging indicator
4 With connection for differential indicator

Filtration rating (filter media)

A03	Inorganic microfiber 3 µm	**M25**	Wire mesh 25 µm
A06	Inorganic microfiber 6 µm	**M60**	Wire mesh 60 µm
A10	Inorganic microfiber 10 µm	**M90**	Wire mesh 90 µm
A16	Inorganic microfiber 16 µm	**P10**	Resin impregnated paper 10 µm
A25	Inorganic microfiber 25 µm	**P25**	Resin impregnated paper 25 µm

Element Δp
N 20 bar

Execution
P01 MP Filtri standard
Pxx Customized

FILTER ELEMENT

Configuration example: CU110 | 4 | A10 | A | N | P01

Element series and size
CU110

Element length
1 | **2** | **3** | **4**

Filtration rating (filter media)

A03	Inorganic microfiber 3 µm	**M25**	Wire mesh 25 µm
A06	Inorganic microfiber 6 µm	**M60**	Wire mesh 60 µm
A10	Inorganic microfiber 10 µm	**M90**	Wire mesh 90 µm
A16	Inorganic microfiber 16 µm	**P10**	Resin impregnated paper 10 µm
A25	Inorganic microfiber 25 µm	**P25**	Resin impregnated paper 25 µm

Seals		Filtration rating Axx	Mxx	Pxx
A	NBR	•	•	•
V	FPM	•	•	•
W	NBR compatible with fluids HFA-HFB-HFC	•	•	

Element Δp
N 20 bar

Execution
P01 MP Filtri standard
Pxx Customized

ACCESSORIES

Indicators on Return Line		page
BVA	Axial pressure gauge	278
BVR	Radial pressure gauge	278
BVP	Visual pressure indicator with automatic reset	279
BVQ	Visual pressure indicator with manual reset	279
BEA	Electrical pressure indicator	276
BEM	Electrical pressure indicator	276
BET	Electrical pressure indicator	276-277
BLA	Electrical / visual pressure indicator	277-278

Differential indicators		page
DEA	Electrical differential indicator	280
DEM	Electrical differential indicator	280-281
DLA	Electrical / visual differential indicator	281-282
DLE	Electrical / visual differential indicator	282
DTA	Electronic differential indicator	283
DVA	Visual differential indicator	283
DVM	Visual differential indicator	283

Additional features		page
T2	Plug	284

LMP 124 MULTIPORT	
Filter length	**H [mm]**
1	182
2	215
3	265
4	365

Connections	**R**
B	M10
F	3/8" UNC

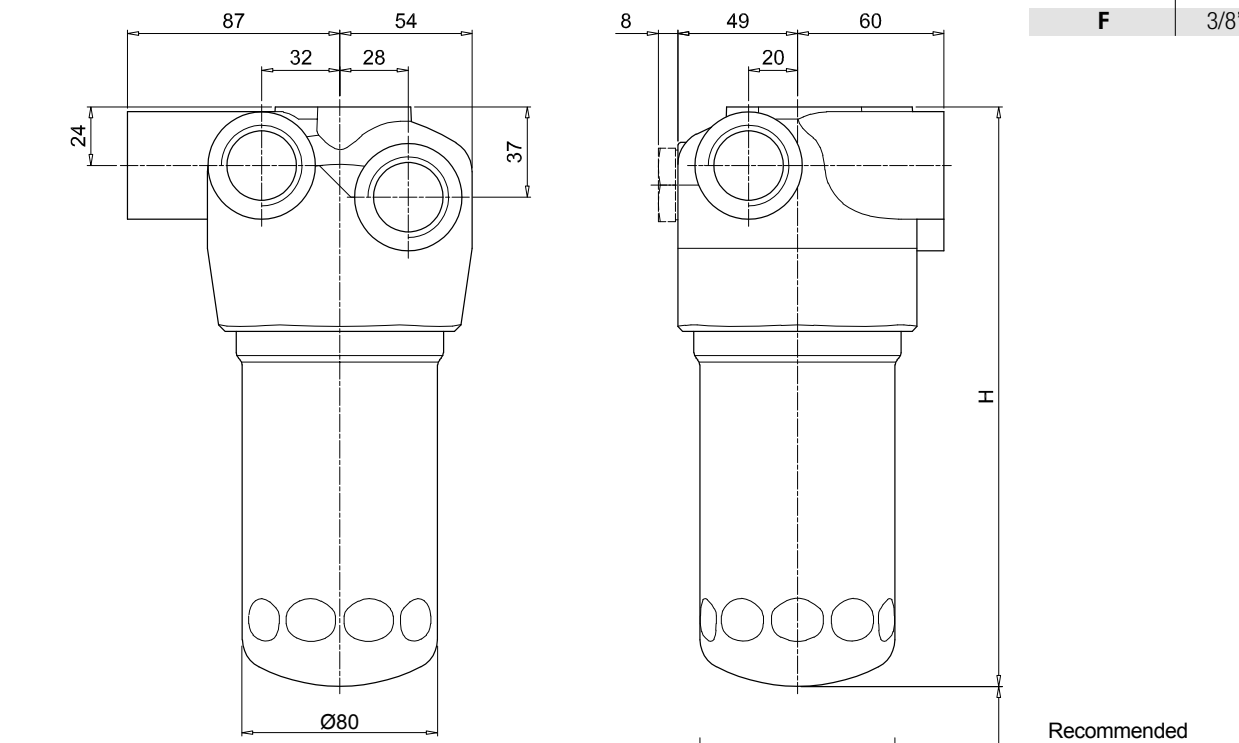

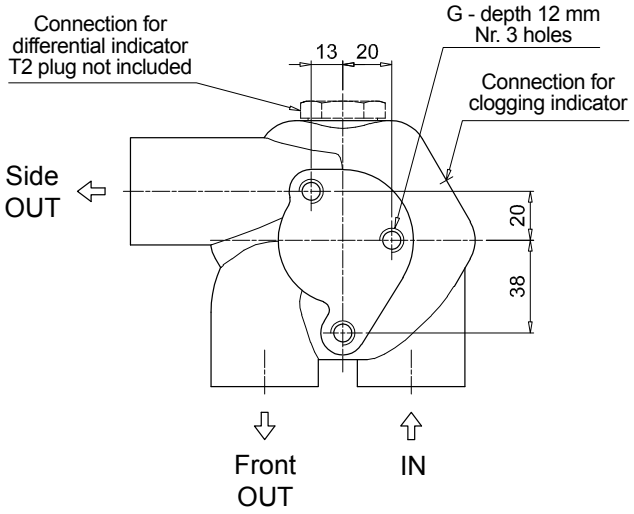

Order number for spare parts

LMP 124 MULTIPORT

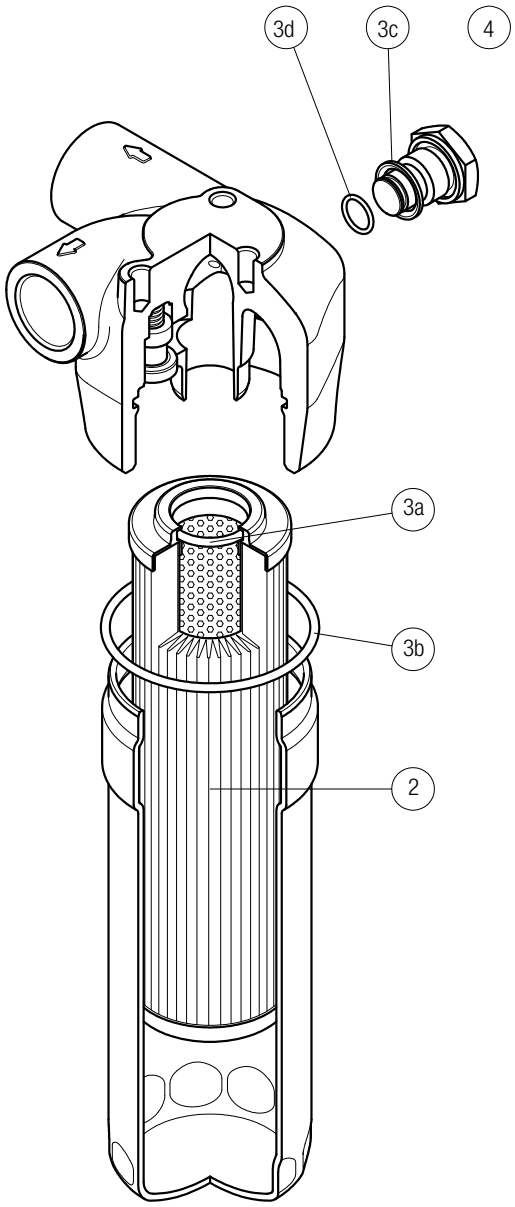

Item:	Q.ty: 1 pc. 2	Q.ty: 1 pc. 3 (3a ÷ 3d)		Q.ty: 1 pc. 4	
Filter series	Filter element	Seal Kit code number NBR	FPM	Indicator connection plug NBR	FPM
LMP 124 MULTIPORT	See order table	02050478	02050479	T2H	T2V

Clogging indicators

Vacuum indicators
Barometric indicators
Differential indicators

Introduction

Filter elements are efficient only if their Dirt Holding Capacity is fully exploited. This is achieved by using filter housings equipped with clogging indicators.
These devices trip when the clogging of the filter element causes an increase in pressure drop across the filter element.
The indicator is set to alarm before the element becomes fully clogged.
MP Filtri can supply indicators of the following designs:

- **Vacuum switches and gauges**
- **Pressure switches and gauges**
- **Differential pressure indicators**

These type of devices can be provided with a visual, electrical or both signals.

Suitable indicator types

VACUUM INDICATORS
Vacuum indicators are used on the Suction line to check the efficiency of the filter element.
They measure the pressure downstream of the filter element.
Standard items are produced with R 1/4" EN 10226 connection.
Available products with R 1/8" EN 10226 to be fitted on MPS series.

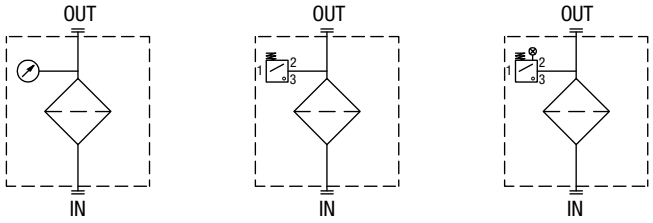

BAROMETRIC INDICATORS
Pressure indicators are used on the Return line to check the efficiency of the filter element.
They measure the pressure upstream of the filter element.
Standard items are produced with R 1/8" EN 10226 connection.

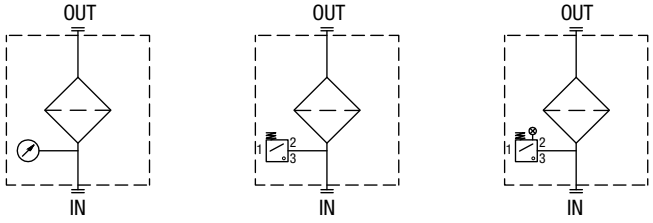

DIFFERENTIAL INDICATORS
Differential indicators are used on the Pressure line to check the efficiency of the filter element.
They measure the pressure upstream and downstream of the filter element (differential pressure).
Standard items are produced with special connection G 1/2" size.
Also available in Stainless Steel models.

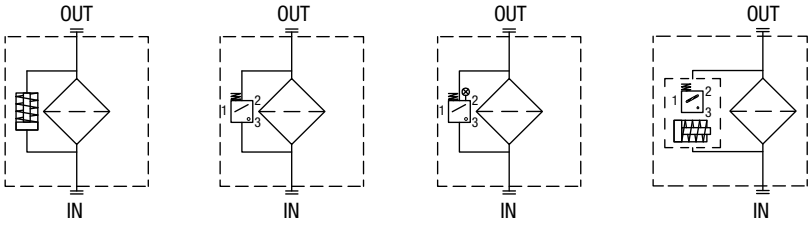

Quick reference guide

	Filter series	Visual indicator	Electrical indicator	Electrical / Visual indicator
Suction line	MRSX 116 - 165 - 166	VVB16P01 VVS16P01	VEB21AA50P01	VLB21AA51P01 VLB21AA52P01 VLB21AA53P01 VLB21AA71P01
Return line	MRSX 116 - 165 - 166 LMP 124 MULTIPORT	BVA25P01 BVR25P01 BVP20HP01 BVQ20HP01	BEA25HA50P01 BEM25HA41P01 BET25HF10P01 BET25HF30P01 BET25HF50P01	BLA25HA51P01 BLA25HA52P01 BLA25HA53P01 BLA25HA71P01

Dimensions

VE*50

Electrical Vacuum Indicator

R	Ordering code
EN 10226 - R1/4"	VE A 21 A A 50 P01
EN 10226 - R1/8"	VE B 21 A A 50 P01

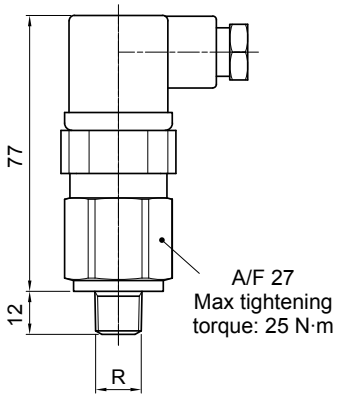

Hydraulic symbol

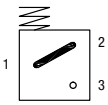

Electrical symbol

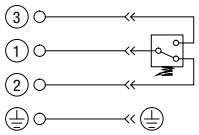

Materials
- Body: Brass
- Base: Black Nylon
- Contacts: Silver
- Seal: NBR

Technical data
- Vacuum setting: -0.21 bar ±10%
- Max working pressure: 10 bar
- Proof pressure: 15 bar
- Working temperature: From -25 °C to +80 °C
- Compatibility with fluids: Mineral oils, Synthetic fluids HFA, HFB, HFC according to ISO 2943
- Degree of protection: IP65 according to EN 60529

Electrical data
- Electrical connection: EN 175301-803
- Resistive load: 5 A / 14 Vdc
  4 A / 30 Vdc
  5 A / 125 Vac
  4 A / 250 Vac
- Available Atex product: II 1GD Ex ia IIC Tx Ex ia IIIC Tx°C X
- CE certification

VL*51 - VL*52 - VL*53

Electrical/Visual Vacuum Indicator

R	Ordering code
EN 10226 - R1/4"	VL A 21 A A xx P01
EN 10226 - R1/8"	VL B 21 A A xx P01

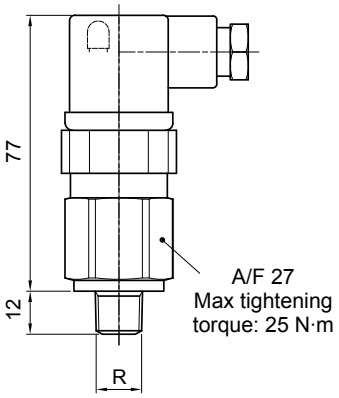

Hydraulic symbol

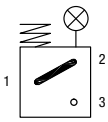

Electrical symbol

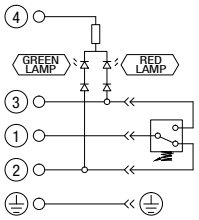

Materials
- Body: Brass
- Base: Transparent Nylon
- Contacts: Brass - Nylon
- Seal: NBR

Technical data
- Vacuum setting: -0.21 bar ±10%
- Max working pressure: 10 bar
- Proof pressure: 15 bar
- Working temperature: From -25 °C to +80 °C
- Compatibility with fluids: Mineral oils, Synthetic fluids HFA, HFB, HFC according to ISO 2943
- Degree of protection: IP65 according to EN 60529

Electrical data

- Electrical connection:	EN 175301-803		
- Type	51	52	53
- Lamps	24 Vdc	110 Vdc	230 Vac
- Resistive load:	1 A / 24 Vdc	1 A / 110 Vdc	1 A / 230 Vac

VL*71

Electrical/Visual Vacuum Indicator

Connections	Indicator code
EN 10226 - R1/4"	VL A 21 A A 71 P01
EN 10226 - R1/8"	VL B 21 A A 71 P01

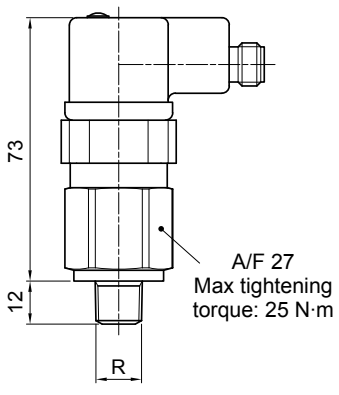

Hydraulic symbol

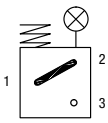

Electrical symbol

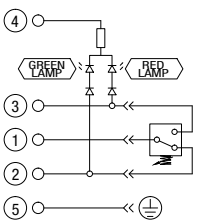

Materials
- Body: Brass
- Base: Black Nylon
- Contacts: Silver
- Seal: NBR

Technical data
- Vacuum setting: -0.21 bar ±10%
- Max working pressure: 10 bar
- Proof pressure: 15 bar
- Working temperature: From -25 °C to +80 °C
- Compatibility with fluids: Mineral oils, Synthetic fluids HFA, HFB, HFC according to ISO 2943
- Degree of protection: IP65 according to EN 60529

Electrical data
- Electrical connection: IEC 61076-2-101 D (M12)
- Lamps 24 Vdc
- Resistive load: 0.4 A / 24 Vdc

VVA - VVB

Axial Vacuum Gauge

R	Ordering code
EN 10226 - R1/4"	VV A 16 P01
EN 10226 - R1/8"	VV B 16 P01

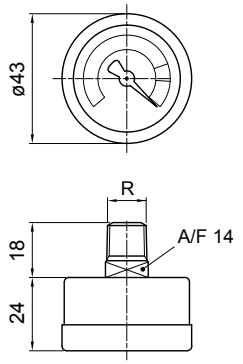

Hydraulic symbol



Dial scale

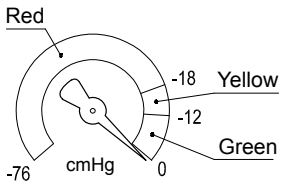

Conversion to SI units

[cmHg]	[bar]
-12	-0.16
-18	-0.24
-76	-1.01

Materials

- Case: Painted Steel
- Window: Transparent plastic
- Dial: Painted Steel
- Pointer: Painted Aluminium
- Pressure connection: Brass
- Pressure element: Bourdon tube Cu-alloy soft soldered

Technical data

- Max working pressure: Static: 7 bar; Fluctuating: 6 bar; Short time: 10 bar
- Working temperature: From -40 °C to +60 °C
- Compatibility with fluids: Mineral oils, Synthetic fluids; HFA, HFB, HFC according to ISO 2943
- Accuracy: Class 2.5 according to EN 13190
- Degree of protection: IP31 according to EN 60529

VVR - VVS

Radial Vacuum Gauge

R	A/F	Ordering code
EN 10226 - R1/4"	14	VV R 16 P01
EN 10226 - R1/8"	11	VV S 16 P01

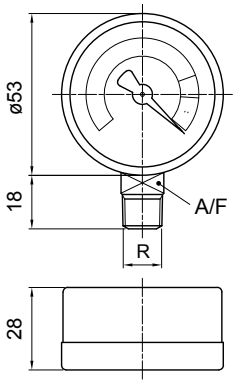

Hydraulic symbol



Dial scale

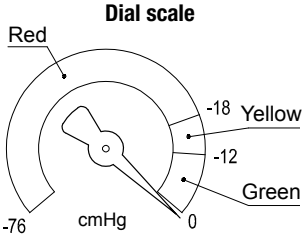

Conversion to SI units

[cmHg]	[bar]
-12	-0.16
-18	-0.24
-76	-1.01

Materials

- Case: Painted Steel
- Window: Transparent plastic
- Dial: Painted Steel
- Pointer: Painted Aluminium
- Pressure connection: Brass
- Pressure element: Bourdon tube Cu-alloy soft soldered

Technical data

- Max working pressure: Static: 7 bar; Fluctuating: 6 bar; Short time: 10 bar
- Working temperature: From -40 °C to +60 °C
- Compatibility with fluids: Mineral oils, Synthetic fluids; HFA, HFB, HFC according to ISO 2943
- Accuracy: Class 2.5 according to EN 13190
- Degree of protection: IP31 according to EN 60529

DESIGNATION & ORDERING CODE

Configuration example 1:	VE	A	21	A	A	50	P01
Configuration example 2:	VL	B	21	A	A	71	P01
Configuration example 3:	VV	R	16				P01

Series

VE Electrical vacuum indicator
VL Electrical/Visual vacuum indicator
VV Vacuum gauge

Type VE - VL

A Connection EN 10226 - R1/4"
B Connection EN 10226 - R1/8"

Type VV

A Axial connection EN 10226 - R1/4"
B Axial connection EN 10226 - R1/8"
R Radial connection EN 10226 - R1/4"
S Radial connection EN 10226 - R1/8"

Vacuum setting	VE	VL	VV
16 -0.16 bar			•
21 -0.21 bar	•	•	

Seals	VE	VL	VV
A NBR	•	•	

Thermostat	VE	VL	VV
A Without	•	•	

Electrical connections	VE	VL	VV
50 Connection EN 175301-803	•		
51 Connection EN 175301-803, transparent base with lamps 24 Vdc		•	
52 Connection EN 175301-803, transparent base with lamps 110 Vdc		•	
53 Connection EN 175301-803, transparent base with lamps 230 Vdc		•	
71 Connection IEC 61076-2-101 D (M12), black base with lamps 24 Vdc		•	

Option

P01 MP Filtri standard
Pxx Customized

BEA*50

Electrical Pressure Indicator

Settings	Ordering code
1.5 bar ±10%	BE A 15 H A 50 P01
2.0 bar ±10%	BE A 20 H A 50 P01

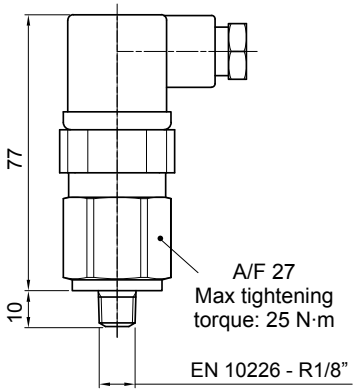

Hydraulic symbol

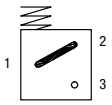

Electrical symbol

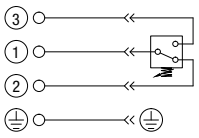

Materials
- Body: Brass
- Base: Black Nylon
- Contacts: Silver
- Seal: HNBR

Technical data
- Max working pressure: 40 bar
- Proof pressure: 60 bar
- Working temperature: From -25 °C to +80 °C
- Compatibility with fluids: Mineral oils, Synthetic fluids HFA, HFB, HFC according to ISO 2943
- Degree of protection: IP65 according to EN 60529

Electrical data
- Electrical connection: EN 175301-803
- Resistive load: 5 A / 14 Vdc
  4 A / 30 Vdc
  5 A / 125 Vac
  4 A / 250 Vac
- Available Atex product: II 1GD Ex ia IIC Tx Ex ia IIIC Tx°C X
- CE certification

BEM*41

Electrical Pressure Indicator

Settings	Ordering code
1.5 bar ±10%	BE M 15 H A 41 P01
2.0 bar ±10%	BE M 20 H A 41 P01

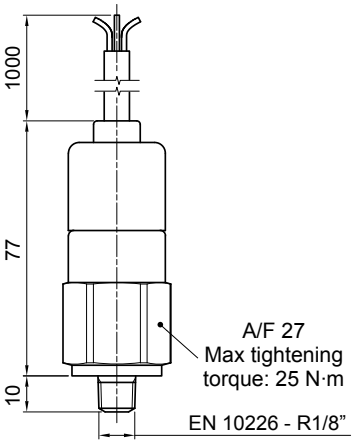

Hydraulic symbol

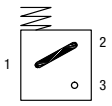

Electrical symbol

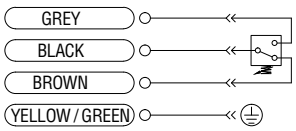

Materials
- Body: Brass
- Base: Black Nylon
- Contacts: Silver
- Seal: HNBR

Technical data
- Max working pressure: 40 bar
- Proof pressure: 60 bar
- Working temperature: From -25 °C to +80 °C
- Compatibility with fluids: Mineral oils, Synthetic fluids HFA, HFB, HFC according to ISO 2943
- Degree of protection: IP67 according to EN 60529

Electrical data
- Electrical connection: Four-core cable
- Resistive load: 5 A / 14 Vdc
  4 A / 30 Vdc
  5 A / 125 Vac
  4 A / 250 Vac
- CE certification

On request this indicator can be provided with main connectors in use for wirings.

BET*10

Electrical Pressure Indicator

Settings	Ordering code
2.0 bar ±10%	BE T 20 H F 10 P01
2.5 bar ±10%	BE T 25 H F 10 P01

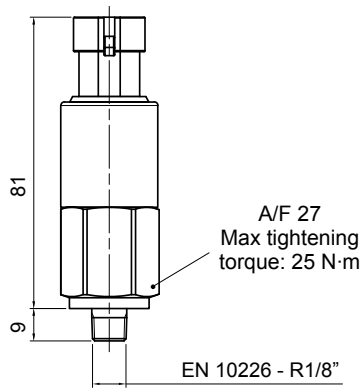

Hydraulic symbol

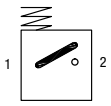

Electrical symbol

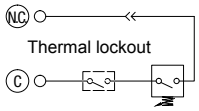

Materials
- Body: Brass
- Base: Black Nylon
- Contacts: Silver
- Seal: HNBR

Technical data
- Max working pressure: 10 bar
- Proof pressure: 15 bar
- Working temperature: From -25 °C to +100 °C
- Compatibility with fluids: Mineral oils, Synthetic fluids HFA, HFB, HFC according to ISO 2943
- Degree of protection: IP65 according to EN 60529

Electrical data
- Electrical connection: AMP Superseal series 1.5
- Resistive load: 0.5 A / 48 Vdc
- Thermostat condition: Open up to 30 °C
- CE certification

BET*30

Electrical Pressure Indicator

Settings	Ordering code
2.0 bar ±10%	BE T 20 H F 30 P01
2.5 bar ±10%	BE T 25 H F 30 P01

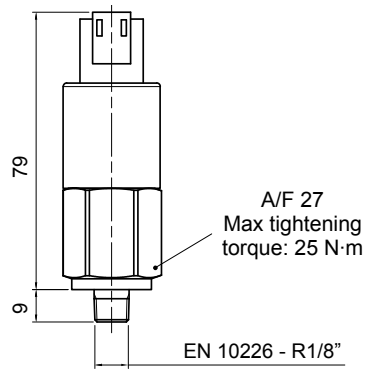

Hydraulic symbol

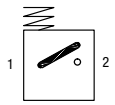

Electrical symbol

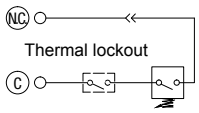

Materials
- Body: Brass
- Base: Black Nylon
- Contacts: Silver
- Seal: HNBR

Technical data
- Max working pressure: 10 bar
- Proof pressure: 15 bar
- Working temperature: From -25 °C to +100 °C
- Compatibility with fluids: Mineral oils, Synthetic fluids HFA, HFB, HFC according to ISO 2943
- Degree of protection: IP65 according to EN 60529

Electrical data
- Electrical connection: Deutsch DT-04-2-P
- Resistive load: 0.5 A / 48 Vdc
- Thermostat condition: Open up to 30 °C
- CE certification

BET*50

Electrical Pressure Indicator

Settings	Ordering code
2.0 bar ±10%	BE T 20 H F 50 P01
2.5 bar ±10%	BE T 25 H F 50 P01

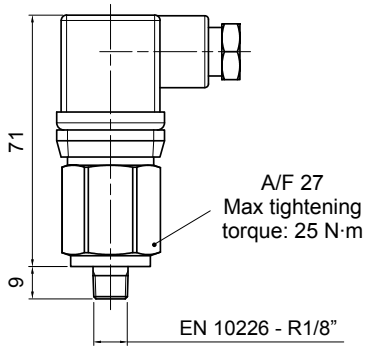

Hydraulic symbol

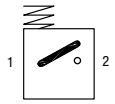

Electrical symbol

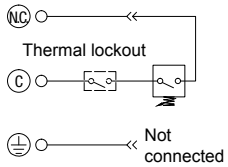

Materials
- Body: Brass
- Base: Black Nylon
- Contacts: Silver
- Seal: HNBR

Technical data
- Max working pressure: 10 bar
- Proof pressure: 15 bar
- Working temperature: From -25 °C to +100 °C
- Compatibility with fluids: Mineral oils, Synthetic fluids HFA, HFB, HFC according to ISO 2943
- Degree of protection: IP65 according to EN 60529

Electrical data
- Electrical connection: EN 175301-803
- Resistive load: 0.5 A / 48 Vdc
- Thermostat condition: Open up to 30 °C
- CE certification

BL*51 - BL*52 - BL*53

Electrical/Visual Pressure Indicator

Settings	Ordering code
1.5 bar ±10%	BL A 15 H A xx P01
2.0 bar ±10%	BL A 20 H A xx P01

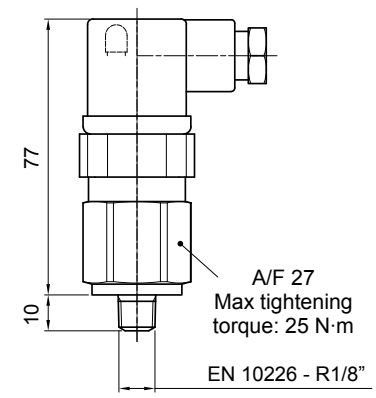

Hydraulic symbol

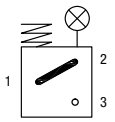

Electrical symbol

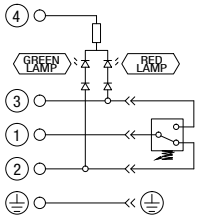

Materials
- Body: Brass
- Base: Transparent Nylon
- Contacts: Silver
- Seal: HNBR

Technical data
- Max working pressure: 40 bar
- Proof pressure: 60 bar
- Working temperature: From -25 °C to +80 °C
- Compatibility with fluids: Mineral oils, Synthetic fluids HFA, HFB, HFC according to ISO 2943
- Degree of protection: IP65 according to EN 60529

Electrical data

- Electrical connection:	EN 175301-803		
- Type	51	52	53
- Lamps	24 Vdc	110 Vdc	230 Vac
- Resistive load:	1 A / 24 Vdc	1 A / 110 Vdc	1 A / 230 Vac

BAROMETRIC INDICATORS

Dimensions

BL*71

Electrical/Visual Pressure Indicator

Settings	Ordering code
1.5 bar ±10%	BL A 15 H A 71 P01
2.0 bar ±10%	BL A 20 H A 71 P01

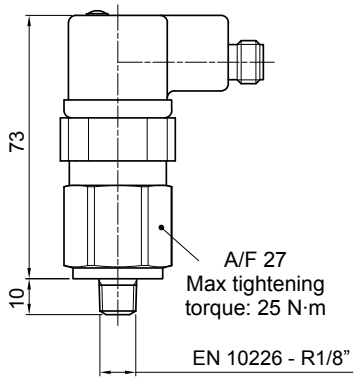

Hydraulic symbol

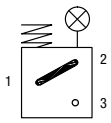

Electrical symbol

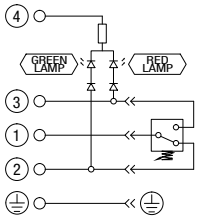

Materials
- Body: Brass
- Base: Black Nylon
- Contacts: Silver
- Seal: HNBR

Technical data
- Max working pressure: 40 bar
- Proof pressure: 60 bar
- Working temperature: From -25 °C to +80 °C
- Compatibility with fluids: Mineral oils, Synthetic fluids HFA, HFB, HFC according to ISO 2943
- Degree of protection: IP65 according to EN 60529

Electrical data
- Electrical connection: IEC 61076-2-101 D (M12)
- Lamps: 24 Vdc
- Resistive load: 0.4 A / 24 Vdc

BVA

Axial Pressure Gauge

Settings	Ordering code
1.4 bar ±10%	BV A 14 P01
2.5 bar ±10%	BV A 25 P01

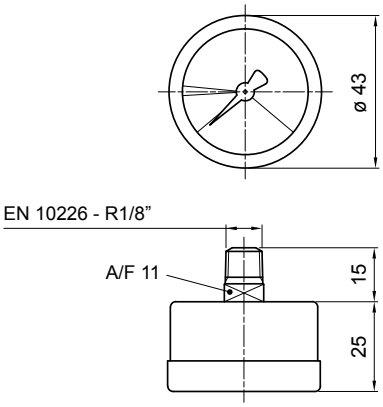

Hydraulic symbol



Dial scale

BV A 14 P01

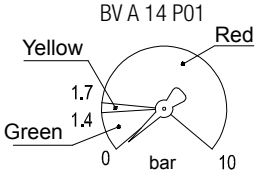

BV A 25 P01

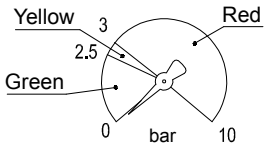

Materials
- Case: Painted Steel
- Window: Transparent plastic
- Dial: Painted Steel
- Pointer: Painted Aluminium
- Pressure connection: Brass
- Pressure element: Bourdon tube Cu-alloy soft soldered

Technical data
- Max working pressure: Static: 7 bar Fluctuating: 6 bar Short time: 10 bar
- Working temperature: From -40 °C to +60 °C
- Compatibility with fluids: Mineral oils, Synthetic fluids HFA, HFB, HFC according to ISO 2943
- Accuracy: Class 2.5 according to EN 13190
- Degree of protection: IP31 according to EN 60529

BVR

Radial Pressure Gauge

Settings	Ordering code
1.4 bar ±10%	BV R 14 P01
2.5 bar ±10%	BV R 25 P01

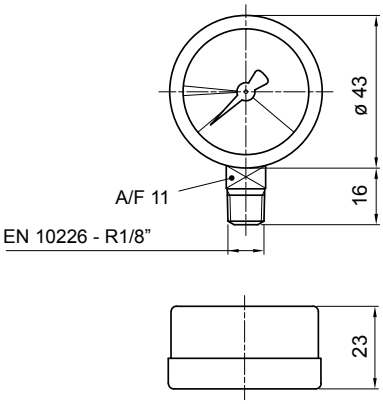

Hydraulic symbol



Dial scale

BV R 14 P01

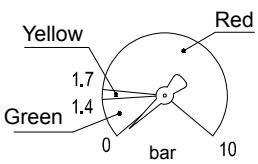

BV R 25 P01

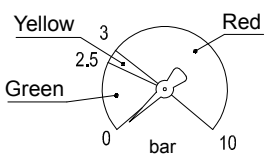

Materials
- Case: Painted Steel
- Window: Transparent plastic
- Dial: Painted Steel
- Pointer: Painted Aluminium
- Pressure connection: Brass
- Pressure element: Bourdon tube Cu-alloy soft soldered

Technical data
- Max working pressure: Static: 7 bar Fluctuating: 6 bar Short time: 10 bar
- Working temperature: From -40 °C to +60 °C
- Compatibility with fluids: Mineral oils, Synthetic fluids HFA, HFB, HFC according to ISO 2943
- Accuracy: Class 2.5 according to EN 13190
- Degree of protection: IP31 according to EN 60529

BVP - BVQ

Visual Pressure Indicator

Setting	Ordering code
1.5 bar ±10%	BV P 15 H P01
	BV Q 15 H P01
2.0 bar ±10%	BV P 20 H P01
	BV Q 20 H P01

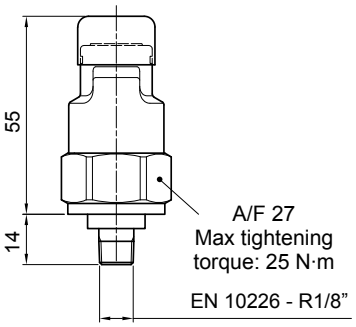

Hydraulic symbol

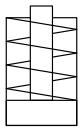

Materials

- Body: Brass
- Cover / internal parts: Nylon
- Caps: VMQ
- Seal: HNBR

Technical data

- Reset: BVP - Automatic reset; BVQ - Manual reset
- Max working pressure: 10 bar
- Proof pressure: 15 bar
- Working temperature: From -25 °C to +80 °C
- Compatibility with fluids: Mineral oils, Synthetic fluids HFA, HFB, HFC according to ISO 2943
- Degree of protection: IP45 according to EN 60529

Signals

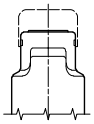

Absence of pressure (no indicator)

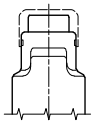

Presence of pressure (green button rises gradually)

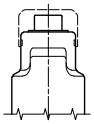

Clogged filter element (red button risen)

DESIGNATION & ORDERING CODE

Configuration example 1:	BE	M	15	H	A	41	P01
Configuration example 2:	BL	A	20	H	A	71	P01
Configuration example 3:	BV	R	14				P01
Configuration example 4:	BV	P	20	H			P01

Series

BE Electrical pressure indicator
BL Electrical/Visual pressure indicator
BV Visual pressure indicator

Type	BE	BL	BV
A Standard type	•	•	**A** Axial connection pressure gauge
M With wired electrical connection	•		**R** Radial connection pressure gauge
T With thermal switch	•		**P** Visual indicator with automatic reset
			Q Visual indicator with manual reset

Pressure setting	BEA-BEM	BET	BLA	BVA-BVR	BVP-BVQ
14 1.4 bar				•	
15 1.5 bar	•		•		
20 2.0 bar	•	•	•		•
25 2.5 bar		•		•	

Seals	BE	BLA	BVA-BVR	BVP-BVQ
H HNBR	•	•		•

Thermostat	BEA-BEM	BET	BLA	BV
A Without	•		•	
F With		•		

Electrical connections	BEA	BEM	BET	BL	BV
10 Connection AMP Superseal series 1.5			•		
30 Connection Deutsch DT-04-2-P			•		
41 Connection via four-core cable		•			
50 Connection EN 175301-803	•		•		
51 Connection EN 175301-803, transparent base with lamps 24 Vdc				•	
52 Connection EN 175301-803, transparent base with lamps 110 Vdc				•	
53 Connection EN 175301-803, transparent base with lamps 230 Vdc				•	
71 Connection IEC 61076-2-101 D (M12), black base with lamps 24 Vdc				•	

Option

P01 MP Filtri standard
Pxx Customized

Dimensions

DEA*50

Electrical Differential Indicator

Settings	Ordering code
2.0 bar ±10%	DE A 20 x A 50 P01

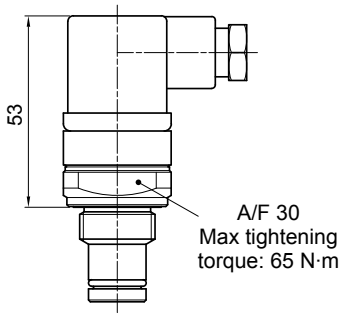

Hydraulic symbol

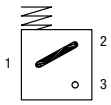

Electrical symbol

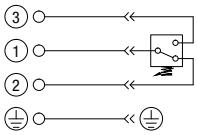

Materials
- Body: Brass
- Base: Black Nylon
- Contacts: Silver
- Seal: HNBR - FPM

Technical data
- Max working pressure: 420 bar
- Proof pressure: 630 bar
- Burst pressure: 1260 bar
- Working temperature: From -25 °C to +110 °C
- Compatibility with fluids: Mineral oils, Synthetic fluids HFA, HFB, HFC according to ISO 2943
- Degree protection: IP66 according to EN 60529 IP69K according to ISO 20653

Electrical data
- Electrical connection: EN 175301-803
- Resistive load: 0.2 A / 115 Vdc

DEM*10

Electrical Differential Indicator

Settings	Ordering code
2.0 bar ±10%	DE M 20 xx 10 P01

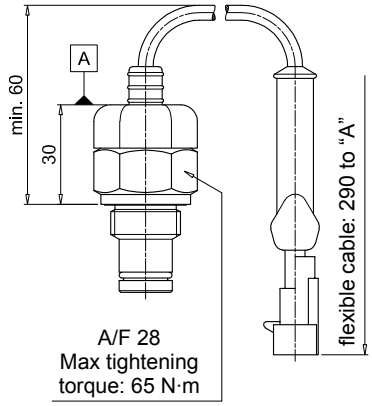

Hydraulic symbol

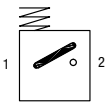

Electrical symbol

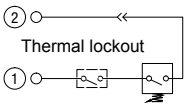

Materials
- Body: Brass
- Base: Black Nylon
- Contacts: Silver
- Seal: HNBR - FPM

Technical data
- Max working pressure: 420 bar
- Proof pressure: 630 bar
- Burst pressure: 1260 bar
- Working temperature: From -25 °C to +110 °C
- Compatibility with fluids: Mineral oils, Synthetic fluids HFA, HFB, HFC according to ISO 2943
- Degree protection: IP66 according to EN 60529

Electrical data
- Electrical connection: AMP Superseal series 1.5
- Resistive load: 0.2 A / 115 Vdc
- Switching type: Normally open contacts (NC on request)
- Thermal lockout: Normally open up to 30 °C (option "F")

DEM*20

Electrical Differential Indicator

Settings	Ordering code
2.0 bar ±10%	DEM20xx20P01

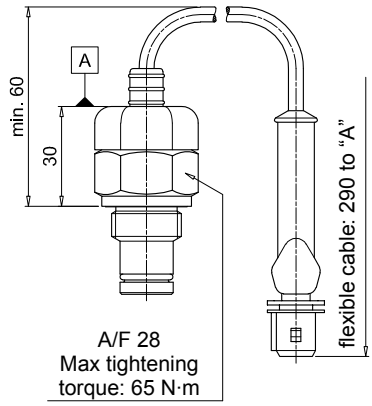

Hydraulic symbol

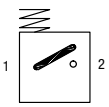

Electrical symbol

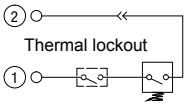

Materials
- Body: Brass
- Base: Black Nylon
- Contacts: Silver
- Seal: HNBR - FPM

Technical data
- Max working pressure: 420 bar
- Proof pressure: 630 bar
- Burst pressure: 1260 bar
- Working temperature: From -25 °C to +110 °C
- Compatibility with fluids: Mineral oils, Synthetic fluids HFA, HFB, HFC according to ISO 2943
- Degree protection: IP66 according to EN 60529

Electrical data
- Electrical connection: AMP Time junior
- Resistive load: 0.2 A / 115 Vdc
- Switching type: Normally open contacts (NC on request)
- Thermal lockout: Normally open up to 30 °C (option "F")

DEM*30

Electrical Differential Indicator

Settings	Ordering code
2.0 bar ±10%	DE M 20 xx 30 P01

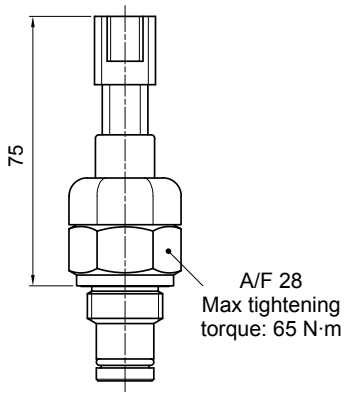

Hydraulic symbol

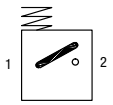

Electrical symbol

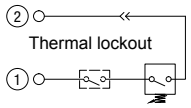

Materials
- Body: Brass
- Base: Black Nylon
- Contacts: Silver
- Seal: HNBR - FPM

Technical data
- Max working pressure: 420 bar
- Proof pressure: 630 bar
- Burst pressure: 1260 bar
- Working temperature: From -25 °C to +110 °C
- Compatibility with fluids: Mineral oils, Synthetic fluids HFA, HFB, HFC according to ISO 2943
- Degree protection: IP66 according to EN 60529

Electrical data
- Electrical connection: Deutsch DT-04-2-P
- Resistive load: 0.2 A / 115 Vdc
- Switching type: Normally open contacts (NC on request)
- Thermal lockout: Normally open up to 30 °C (option “F”)

DEM*35

Electrical Differential Indicator

Settings	Ordering code
2.0 bar ±10%	DE M 20 xx 35 P01

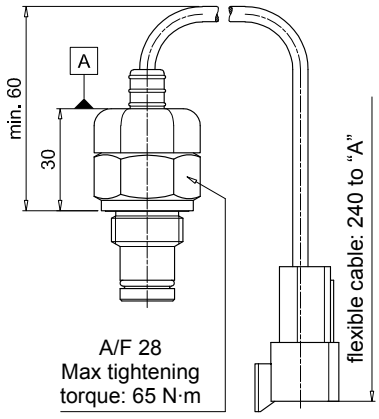

Hydraulic symbol

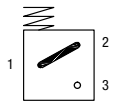

Electrical symbol

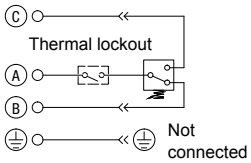

Materials
- Body: Brass
- Base: Black Nylon
- Contacts: Silver
- Seal: HNBR - FPM

Technical data
- Max working pressure: 420 bar
- Proof pressure: 630 bar
- Burst pressure: 1260 bar
- Working temperature: From -25 °C to +110 °C
- Compatibility with fluids: Mineral oils, Synthetic fluids HFA, HFB, HFC according to ISO 2943
- Degree protection: IP66 according to EN 60529

Electrical data
- Electrical connection: Deutsch DT-04-3-P
- Resistive load: 0.2 A / 115 Vdc
- Switching type: SPDT contact
- Thermal lockout: Normally open up to 30 °C (option “F”)

DLA*51 - DLA*52

Electrical/Visual Differential Indicator

Settings	Ordering code
2.0 bar ±10%	DL A 20 x A xx P01

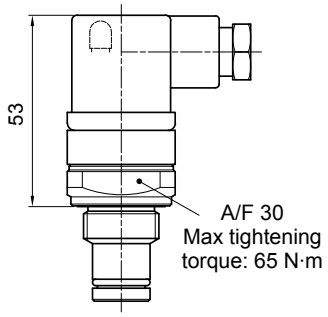

Hydraulic symbol

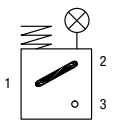

Electrical symbol

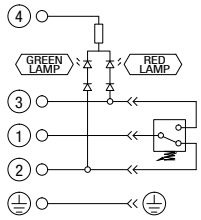

Materials
- Body: Brass
- Base: Transparent Nylon
- Contacts: Silver
- Seal: HNBR - FPM

Technical data
- Max working pressure: 420 bar
- Proof pressure: 630 bar
- Burst pressure: 1260 bar
- Working temperature: From -25 °C to +110 °C
- Compatibility with fluids: Mineral oils, Synthetic fluids HFA, HFB, HFC according to ISO 2943
- Degree protection: IP66 according to EN 60529 IP69K according to ISO 20653

Electrical data
- Electrical connection: EN 175301-803
- Type: 51 / 52
- Lamps: 24 Vdc / 110 Vdc
- Resistive load: 1 A / 24 Vdc / 1 A / 110 Vdc

DLA*71

Electrical/Visual Differential Indicator

Settings	Ordering code
2.0 bar ±10%	DL A 20 x A 71 P01

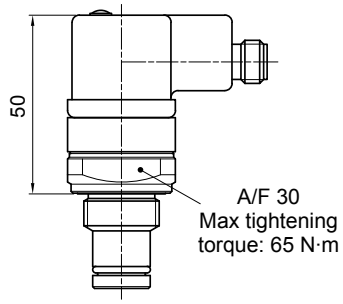

Hydraulic symbol

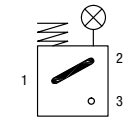

Electrical symbol

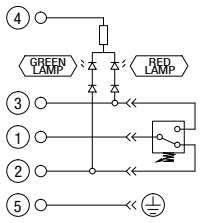

Materials
- Body: Brass
- Base: Black Nylon
- Contacts: Silver
- Seal: HNBR - FPM

Technical data
- Max working pressure: 420 bar
- Proof pressure: 630 bar
- Burst pressure: 1260 bar
- Working temperature: From -25 °C to +110 °C
- Compatibility with fluids: Mineral oils, Synthetic fluids HFA, HFB, HFC according to ISO 2943
- Degree protection: IP65 according to EN 60529 IP69K according to ISO 20653

Electrical data
- Electrical connection: IEC 61076-2-101 D (M12)
- Lamps 24 Vdc
- Resistive load: 0.4 A / 24 Vdc

DLE*A50

Electrical/Visual Differential Indicator

Settings	Ordering code
2.0 bar ±10%	DL E 20 x A 50 P01

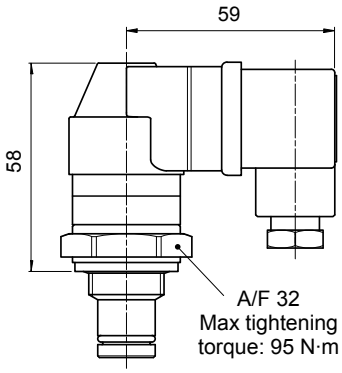

Hydraulic symbol

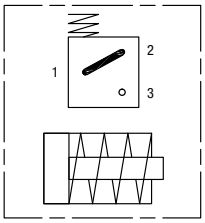

Electrical symbol

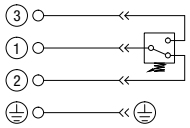

Materials
- Body: Brass
- Base: Black Nylon
- Contacts: Silver
- Seal: HNBR - FPM

Technical data
- Max working pressure: 420 bar
- Proof pressure: 630 bar
- Burst pressure: 1260 bar
- Working temperature: From -25 °C to +110 °C
- Compatibility with fluids: Mineral oils, Synthetic fluids HFA, HFB, HFC according to ISO 2943
- Degree protection: IP65 according to EN 60529

Electrical data
- Electrical connections: EN 175301-803
- Resistive load: 5 A / 250 Vac
- Available the connector with lamps

DLE*F50

Electrical/Visual Differential Indicator

Settings	Ordering code
2.0 bar ±10%	DL E 20 x F 50 P01

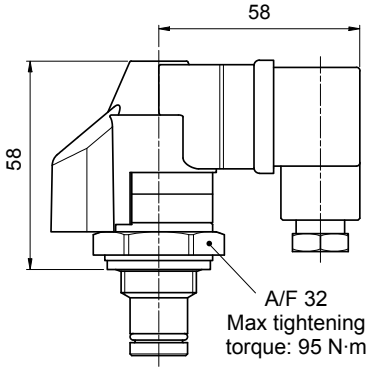

Hydraulic symbol

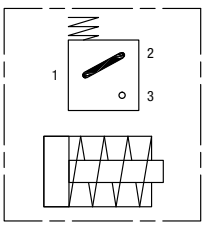

Electrical symbol

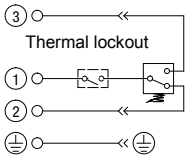

Materials
- Body: Brass
- Base: Black Nylon
- Contacts: Silver
- Seal: HNBR - FPM

Technical data
- Max working pressure: 420 bar
- Proof pressure: 630 bar
- Burst pressure: 1260 bar
- Working temperature: From -25 °C to +110 °C
- Compatibility with fluids: Mineral oils, Synthetic fluids HFA, HFB, HFC according to ISO 2943
- Degree protection: IP65 according to EN 60529

Electrical data
- Electrical connections: EN 175301-803
- Resistive load: 5 A / 250 Vac
- Thermal lockout setting: +30 °C

DTA*70

Electronic Differential Indicator

Settings	Ordering code
2.0 bar ±10%	DT A 20 x x 70 P01

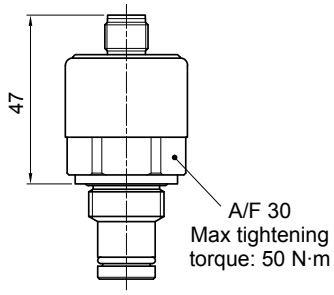

Hydraulic symbol

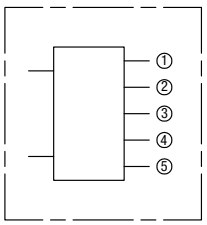

Electrical symbol

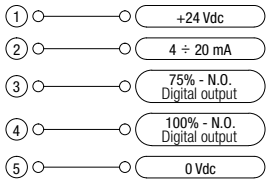

Materials
- Body: Brass
- Internal parts: Brass - Nylon
- Contacts: Silver
- Seal: HNBR - FPM

Industry 4.0 READY

Technical data
- Max working pressure: 420 bar
- Proof pressure: 630 bar
- Burst pressure: 1260 bar
- Compatibility with fluids: Mineral oils, Synthetic fluids HFA, HFB, HFC according to ISO 2943
- Degree protection: IP67 according to EN 60529

Electrical data
- Electrical connection: IEC 61076-2-101 D (M12)
- Power supply: 24 Vdc
- Analogue output: From 4 to 20 mA
- Thermal lockout: 30 °C (all output signals stalled up to 30 °C)

DVA

Visual Differential Indicator

Settings	Ordering code
2.0 bar ±10%	DV A 20 x P01

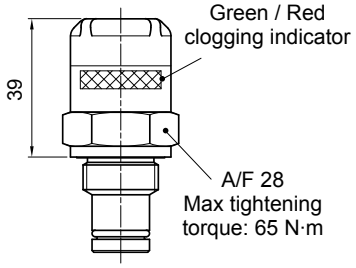

Hydraulic symbol

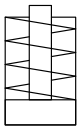

Materials
- Body: Brass
- Internal parts: Brass - Nylon
- Contacts: Silver
- Seal: HNBR - FPM

Technical data
- Reset: Automatic reset
- Max working pressure: 420 bar
- Proof pressure: 630 bar
- Burst pressure: 1260 bar
- Working temperature: From -25 °C to +110 °C
- Compatibility with fluids: Mineral oils, Synthetic fluids HFA, HFB, HFC according to ISO 2943
- Degree protection: IP65 according to EN 60529

DVM

Visual Differential Indicator

Settings	Ordering code
2.0 bar ±10%	DV M 20 x P01

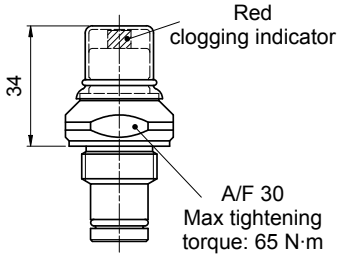

Hydraulic symbol

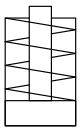

Materials
- Body: Brass
- Internal parts: Brass - Nylon
- Contacts: Silver
- Seal: HNBR - FPM

Technical data
- Reset: Manual reset
- Max working pressure: 420 bar
- Proof pressure: 630 bar
- Burst pressure: 1260 bar
- Working temperature: From -25 °C to +110 °C
- Compatibility with fluids: Mineral oils, Synthetic fluids HFA, HFB, HFC according to ISO 2943
- Degree protection: IP65 according to EN 60529

Dimensions

T2

Indicator plug

Seal	Ordering code
HNBR	T2 H
FPM	T2 V

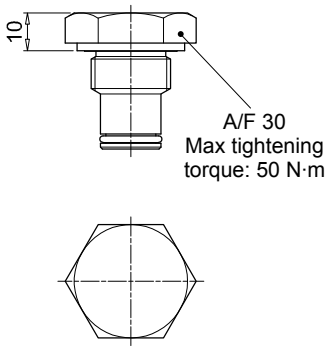

Materials

- Body: Phosphatized steel
- Seal: HNBR / FPM

DESIGNATION & ORDERING CODE - DIFFERENTIAL INDICATORS

Configuration example 1:	DE	M	20	H	F	50	P01
Configuration example 2:	DL	E	20	V	A	71	P01
Configuration example 3:	DT	A	20	H	F	70	P01
Configuration example 4:	DV	M	20	V			P01

Series

- **DE** Electrical differential indicator
- **DL** Electrical/Visual differential indicator
- **DT** Electronic differential indicator
- **DV** Visual differential indicator

Type	DE	DL	DT	DV
A Standard type	•	•	•	**A** With automatic reset
M With wired electrical connection	•			**M** With manual reset
E For high power supply		•		

Pressure setting

- **20** 2.0 bar

Seals

- **H** HNBR
- **V** FPM

Thermostat	DEA	DEM	DLA	DLE	DT	DV
A Without	•	•	•	•		
F With thermostat		•		•	•	

Electrical connections	DEA	DEM	DLA	DLE	DT	DV
10 Connection AMP Superseal series 1.5		•				
20 Connection AMP Timer Junior		•				
30 Connection Deutsch DT-04-2-P		•				
35 Connection Deutsch DT-04-3-P		•				
50 Connection EN 175301-803	•			•		
51 Connection EN 175301-803, transparent base with lamps 24 Vdc			•			
52 Connection EN 175301-803, transparent base with lamps 110 Vdc			•			
70 Connection IEC 61076-2-101 D (M12)					•	
71 Connection IEC 61076-2-101 D (M12), black base with lamps 24 Vdc			•			

Option

- **P01** MP Filtri standard
- **Pxx** Customized

DESIGNATION & ORDERING CODE - DIFFERENTIAL INDICATOR PLUG

Configuration example	T2	H

Series

- **T2** Indicator plug

Seals

- **H** HNBR
- **V** FPM

Spin-On filters are used as process and safety filters to protect individual pumps, valves or the entire hydraulic circuit from contamination as per ISO 4406.

In-line Spin-On filters can be used for the following purposes:
- **Suction filters**
- **On the return circuit, for mounting on the line or on the tank cover**
- **In-line for low and medium pressure applications**

Spin-On filters are available in 4 configurations:
- **Single cartridge in-line**
- **In-line with two parallel cartridges on the same axis**
- **In-line with two parallel cartridges mounted side by side**

All versions may be equipped with visual and/or electrical blockage indicators.

Spin-on filters



MPS	page 289
MSH	305
INDICATORS	311

MPS series

Maximum working pressure up to 1.2 MPa (12 bar) - Flow rate up to 365 l/min



MPS GENERAL INFORMATION

Description

Spin-on filters

Maximum working pressure up to 1.2 MPa (12 bar)
Flow rate up to 365 l/min

MPS is a range of spin-on filters suitable to be used in suction, return and low pressure lines.
They offer a good balance between performances, dimensions and prices.
They are directly connected to the lines of the system through the hydraulic fittings.

Available features:
- Female threaded connections up to 1 1/2" and flanged connections up to 1 1/2", for a maximum flow rate of 365 l/min
- Fine filtration rating, to get a good cleanliness level into the reservoir
- Water removal elements (CW), to remove the free water from the hydraulic fluid
- Double connection for the cans, to fit both European and American standard elements
- Double cans fitting, to increase the life time of the filter
- Bypass valve, to relieve excessive pressure drop across the filter media
- Visual, electrical and electronic clogging indicators for suction and return applications
- Visual, electrical and electronic differential clogging indicators for low pressure applications

Common applications:
- Suction lines, Return lines, Delivery lines, in economic industrial equipment or mobile machines.
- Off-line filtration tank in economic industrial equipment or mobile machines

Technical data

Filter housing materials
- Head: Aluminium
- Bypass valve: Nylon - Steel
- Element: Zinc-Plated Steel - Painted Steel

Bypass valve
- Return filter opening pressure: 175 kPa (1.75 bar) ±10%
- Suction filter opening pressure: 30 kPa (0.3 bar) ±10%

Δp element type
- Δp: 5 bar
- Fluid flow through the filter element from OUT to IN

Seals
Standard NBR - series A

Temperature
From -20 °C to +110 °C

Note
MPS filters are provided for vertical mounting



Weights [kg] and volumes [dm³]

Filter series	Weights [kg]	Volumes [dm³]
MPS 050	1.00	0.70
MPS 051	1.05	0.70
MPS 070	1.20	0.95
MPS 071	1.25	0.95
MPS 100	2.10	1.65
MPS 101	2.20	1.65
MPS 150	2.40	2.00
MPS 151	2.50	2.00
MPS 200	3.90	3.00
MPS 250	4.60	3.70
MPS 300-301	5.30	3.40
MPS 350-351	6.00	4.10

Hydraulic symbols

Filter series					
MPS 050	•				
MPS 051		•			
MPS 070	•				
MPS 071		•			
MPS 100	•				
MPS 101		•			
MPS 150	•				
MPS 151		•			
MPS 200			•		
MPS 250			•		
MPS 300				•	
MPS 301					•
MPS 350				•	
MPS 351					•
	Style U/P	Style U/P	Style U	Style U/P	Style U/P
	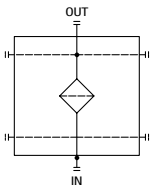	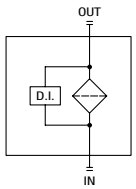	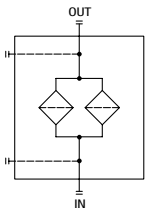	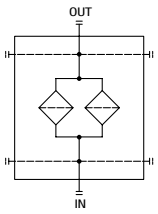	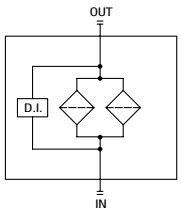
	Style R/S	Style R/S	Style R/S	Style R/S	Style R/S
	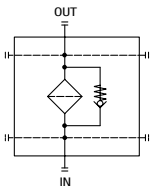	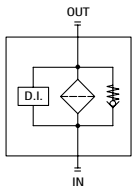	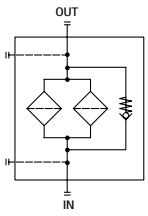	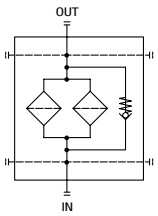	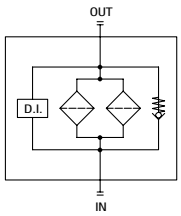

Pressure drop

Bypass valve pressure drop

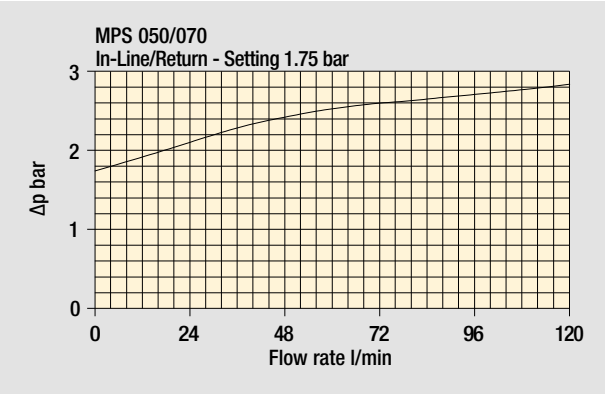

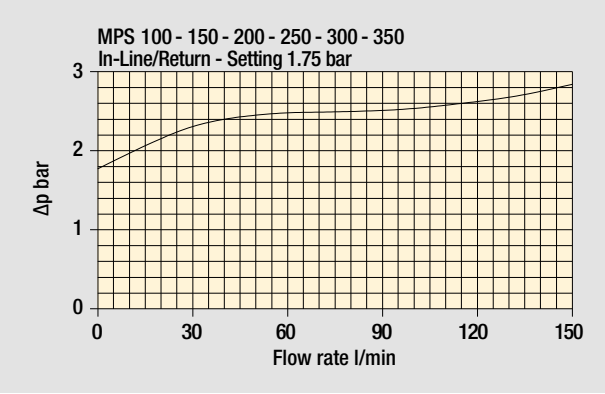

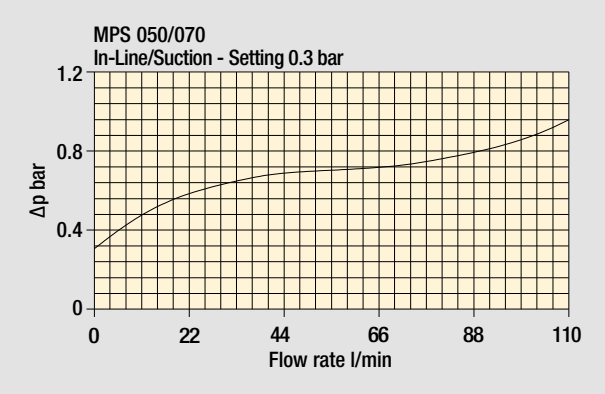

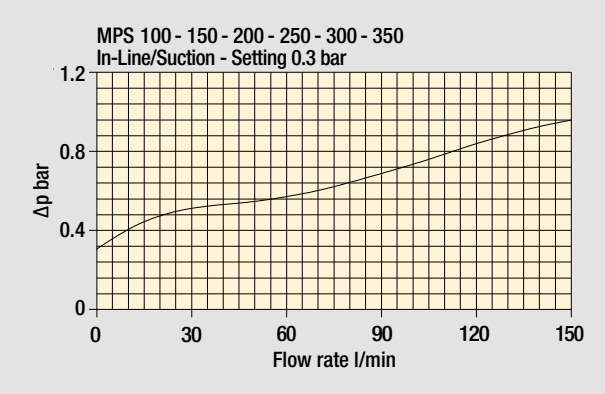

The curves are plotted using mineral oil with density of 0.86 kg/dm^3 in compliance with ISO 3968. Δp varies proportionally with density.

Cartridge

CS 050 - 070 - 100 - 150
CG - CW 050 - 070



CG - CW 100 - 150



CW
This series of cartridge removes water from oil while filtering the oil at the same time.
Water absorbent polymers up to 800 times their own weight provide this major feature.

Water holding capacities:
CW 050= 240 ml
Ordering code: **CW050P10AP01**

CW 150= 788 ml
Ordering code: **CW150P10AP01**

Thread connections	
Element	Connection
CS 050 - 070	G 3/4"
CS 100 - 150	G 1 1/4"
CG / CW 050 - 070	1" - 12 UNF
CG / CW 100 - 150	1 1/2" - 16 UN

Water holding capacities CW		
	good	poor
Viscosity	30/46 mm^2/s (cSt)	> 46 mm^2/s (cSt)
H_2O p.p.m.	600/800 p.p.m.	> 800 p.p.m.
Flow rate	CW050 7/15 l/min CW150 20/40 l/min	CW050 > 20 l/min CW150 > 50 l/min
Temperature	40/60 °C	< 30 °C

Heads

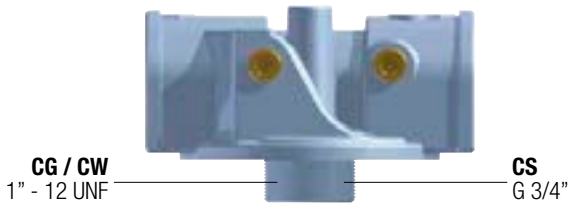

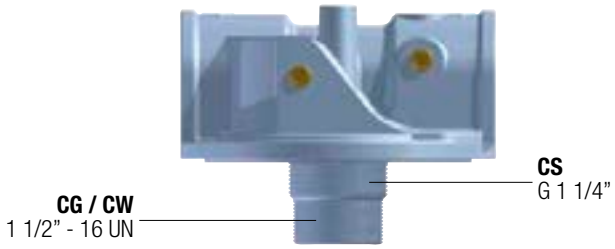

MPS MPS050 - MPS070 MPS051 - MPS071

Designation & Ordering code

COMPLETE FILTER

Configuration example : MPS050 | R | G1 | A10 | A | P01

Series and size

MPS050 | **MPS070** With connections for clogging indicators
MPS051 | **MPS071** With connections for differential indicators

Bypass valve

		MPS 050 - 070	MPS 051 - 071
R	Return: 1.75 bar	•	•
S	Suction: 30 kPa	•	
U	Without bypass	•	
P	Without bypass		•

Connections

G1 G 3/4”
G2 3/4” NPT
G3 SAE 12 - 1 1/16” - 12 UN

Filtration rating (filter media)

A03 Inorganic microfiber 3 µm
A06 Inorganic microfiber 6 µm
A10 Inorganic microfiber 10 µm
A25 Inorganic microfiber 25 µm
M25 Wire mesh 25 µm
M60 Wire mesh 60 µm
M90 Wire mesh 90 µm
P10 Resin impregnated paper 10 µm
P25 Resin impregnated paper 25 µm

Seal

A NBR

Execution

P01 MP Filtri standard

CARTRIDGE

Configuration example: CS050 | A10 | A | P01

Cartridge series and size

CS050 | **CS070**

Filtration rating (filter media)

A03 Inorganic microfiber 3 µm
A06 Inorganic microfiber 6 µm
A10 Inorganic microfiber 10 µm
A25 Inorganic microfiber 25 µm
M25 Wire mesh 25 µm
M60 Wire mesh 60 µm
M90 Wire mesh 90 µm
P10 Resin impregnated paper 10 µm
P25 Resin impregnated paper 25 µm

Seals

A NBR

Execution

P01 MP Filtri standard
Pxx Customized

ACCESSORIES

Clogging indicators on RETURN line

		page
BVA	Axial pressure gauge	315
BVR	Radial pressure gauge	315
BVP	Visual pressure indicator with automatic reset	316
BVQ	Visual pressure indicator with manual reset	316
BEA	Electrical pressure indicator	314
BEM	Electrical pressure indicator	314
BLA	Electrical / visual pressure indicator	314-315

Clogging indicators on SUCTION line

		page
VVB	Axial pressure gauge	313
VVS	Radial pressure gauge	313
VEB	Electrical vacuum indicator	312
VLB	Electrical/visual vacuum indicator	312

Differential indicators

		page
DEA	Electrical differential indicator	317
DEM	Electrical differential indicator	317-318
DLA	Electrical / visual differential indicator	318-319
DLE	Electrical / visual differential indicator	319
DTA	Electronic differential indicator	320
DVA	Visual differential indicator	320
DVM	Visual differential indicator	320

Dimensions

MPS050 - MPS070

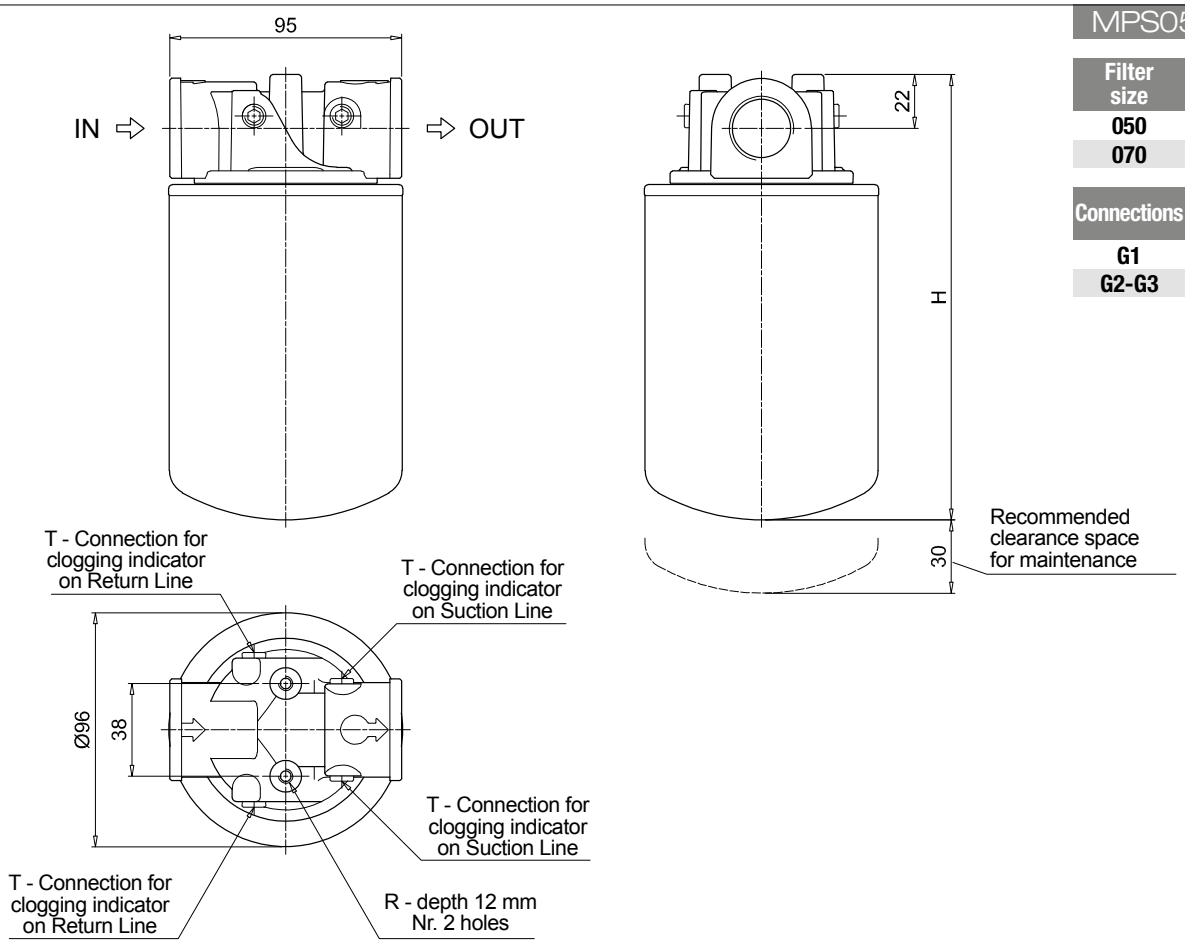

Filter size	H [mm]
050	192
070	256

Connections	T	R
G1	G 1/8"	M6
G2-G3	1/8" NPT	1/4" UNC

MPS051 - MPS071

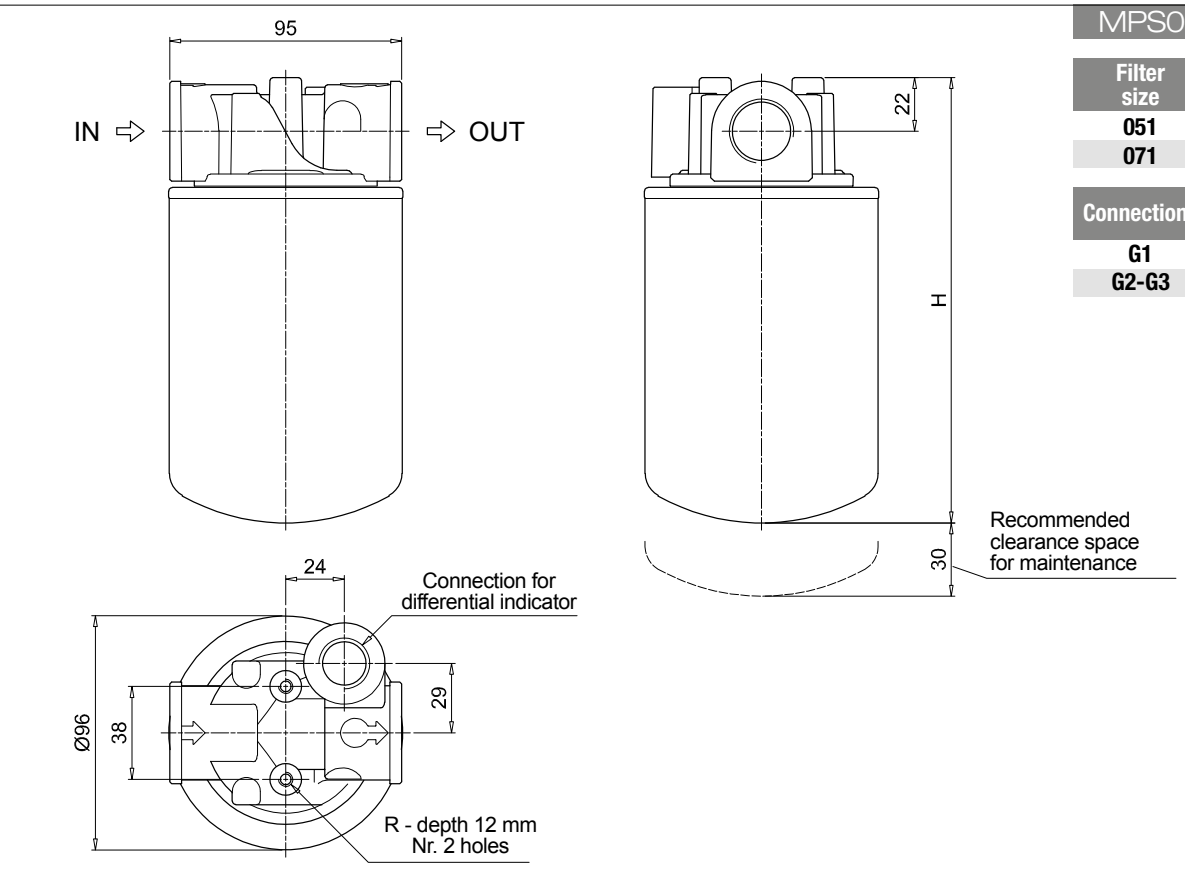

Filter size	H [mm]
051	192
071	256

Connections	R
G1	M6
G2-G3	1/4" UNC

MPS MPS100 - MPS150 MPS101 - MPS151

Designation & Ordering code

COMPLETE FILTER

Configuration example : MPS100 | R | G1 | A10 | A | P01

Series and size

MPS100 | **MPS150** With connections for clogging indicators
MPS101 | **MPS151** With connections for differential indicators

Bypass valve		MPS 100 - 150	MPS 101 - 151
R	Return: 1.75 bar	•	•
S	Suction: 30 kPa	•	
U	Without bypass	•	
P	Without bypass		•

Connections

G1 G 1 1/4”
G2 1 1/4” NPT
G3 SAE 20 - 1 5/8” - 12 UN

Filtration rating (filter media)

A03 Inorganic microfiber 3 µm
A06 Inorganic microfiber 6 µm
A10 Inorganic microfiber 10 µm
A25 Inorganic microfiber 25 µm
M25 Wire mesh 25 µm
M60 Wire mesh 60 µm
M90 Wire mesh 90 µm
P10 Resin impregnated paper 10 µm
P25 Resin impregnated paper 25 µm

Seal

A NBR

Execution

P01 MP Filtri standard

CARTRIDGE

Configuration example: CS100 | A10 | A | P01

Cartridge series and size

CS100 | **CS150**

Filtration rating (filter media)

A03 Inorganic microfiber 3 µm
A06 Inorganic microfiber 6 µm
A10 Inorganic microfiber 10 µm
A25 Inorganic microfiber 25 µm
M25 Wire mesh 25 µm
M60 Wire mesh 60 µm
M90 Wire mesh 90 µm
P10 Resin impregnated paper 10 µm
P25 Resin impregnated paper 25 µm

Seals

A NBR

Execution

P01 MP Filtri standard
Pxx Customized

ACCESSORIES

Clogging indicators on RETURN line		page
BVA	Axial pressure gauge	315
BVR	Radial pressure gauge	315
BVP	Visual pressure indicator with automatic reset	316
BVQ	Visual pressure indicator with manual reset	316
BEA	Electrical pressure indicator	314
BEM	Electrical pressure indicator	314
BLA	Electrical / visual pressure indicator	314-315

Clogging indicators on SUCTION line		page
VVB	Axial pressure gauge	313
VVS	Radial pressure gauge	313
VEB	Electrical vacuum indicator	312
VLB	Electrical/visual vacuum indicator	312

Differential indicators		page
DEA	Electrical differential indicator	317
DEM	Electrical differential indicator	317-318
DLA	Electrical / visual differential indicator	318-319
DLE	Electrical / visual differential indicator	319
DTA	Electronic differential indicator	320
DVA	Visual differential indicator	320
DVM	Visual differential indicator	320

MPS100 - MPS150

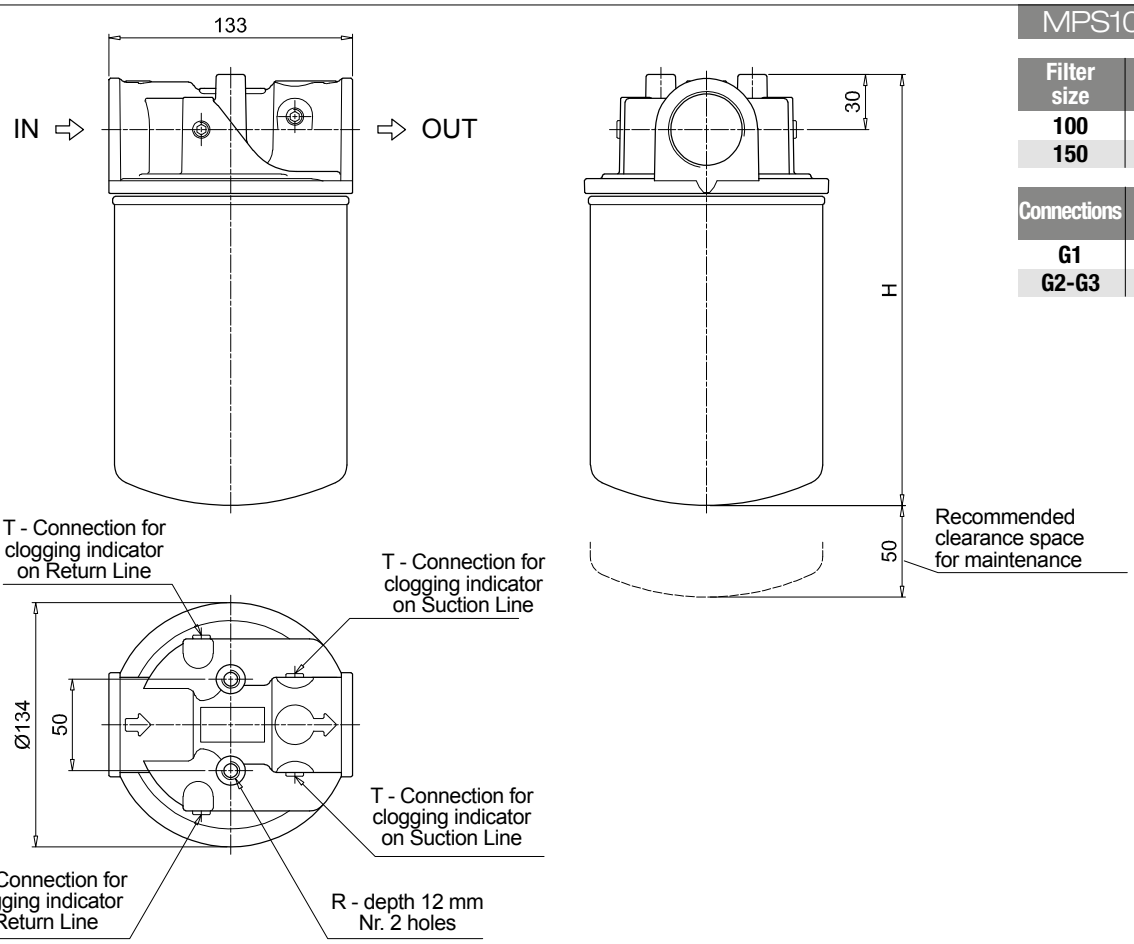

Filter size	H [mm]
100	246
150	295

Connections	T	R
G1	G 1/8"	M8
G2-G3	1/8" NPT	5/16" UNC

MPS101 - MPS151

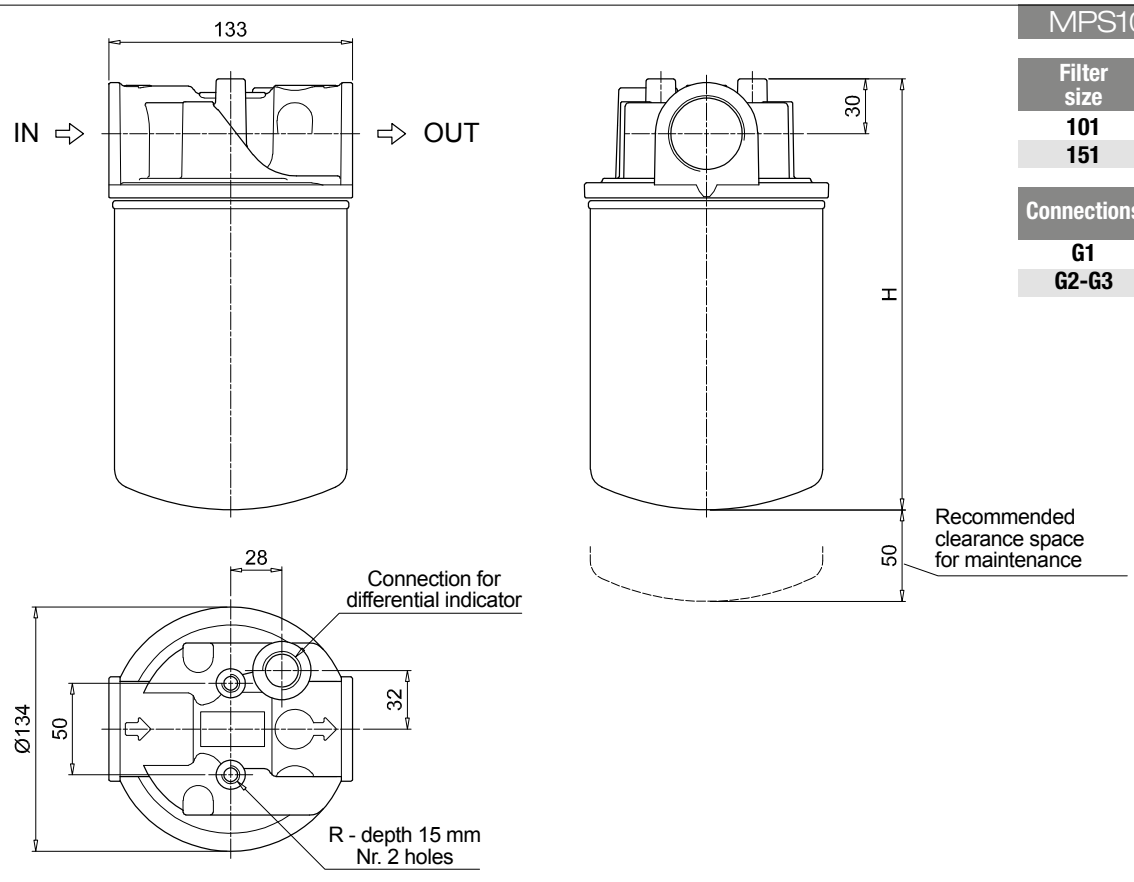

Filter size	H [mm]
101	246
151	295

Connections	R
G1	M8
G2-G3	5/16" UNC

MPS MPS200 - MPS250

Designation & Ordering code

COMPLETE FILTER

Configuration example : MPS200 | R | G1 | A10 | A | P01

Series and size

MPS200 | **MPS250**

Bypass valve

R	Return: 1.75 bar
S	Suction: 30 kPa
U	Without bypass

Connections

G1	G 1 1/2”
G2	1 1/2” NPT
G3	SAE 24 - 1 7/8” - 12 UN

Filtration rating (filter media)

A03	Inorganic microfiber 3 µm	**M25**	Wire mesh 25 µm
A06	Inorganic microfiber 6 µm	**M60**	Wire mesh 60 µm
A10	Inorganic microfiber 10 µm	**M90**	Wire mesh 90 µm
A25	Inorganic microfiber 25 µm	**P10**	Resin impregnated paper 10 µm
		P25	Resin impregnated paper 25 µm

Seal

A	NBR

Execution

P01	MP Filtri standard

CARTRIDGE

Configuration example: CS100 | A10 | A | P01

Cartridge series and size

CS100 | **CS150**

Filtration rating (filter media)

A03	Inorganic microfiber 3 µm	**M25**	Wire mesh 25 µm
A06	Inorganic microfiber 6 µm	**M60**	Wire mesh 60 µm
A10	Inorganic microfiber 10 µm	**M90**	Wire mesh 90 µm
A25	Inorganic microfiber 25 µm	**P10**	Resin impregnated paper 10 µm
		P25	Resin impregnated paper 25 µm

Seals

A	NBR

Execution

P01	MP Filtri standard
Pxx	Customized

ACCESSORIES

Clogging indicators on RETURN line

		page
BVA	Axial pressure gauge	315
BVR	Radial pressure gauge	315
BVP	Visual pressure indicator with automatic reset	316
BVQ	Visual pressure indicator with manual reset	316
BEA	Electrical pressure indicator	314
BEM	Electrical pressure indicator	314
BLA	Electrical / visual pressure indicator	314-315

Clogging indicators on SUCTION line

		page
VVB	Axial pressure gauge	313
VVS	Radial pressure gauge	313
VEB	Electrical vacuum indicator	312
VLB	Electrical/visual vacuum indicator	312

MPS200 - MPS250

Filter size	H [mm]
200	213
250	262

Connections	T	R
G1	G 1/8"	M10
G2-G3	1/8" NPT	7/16" UNC

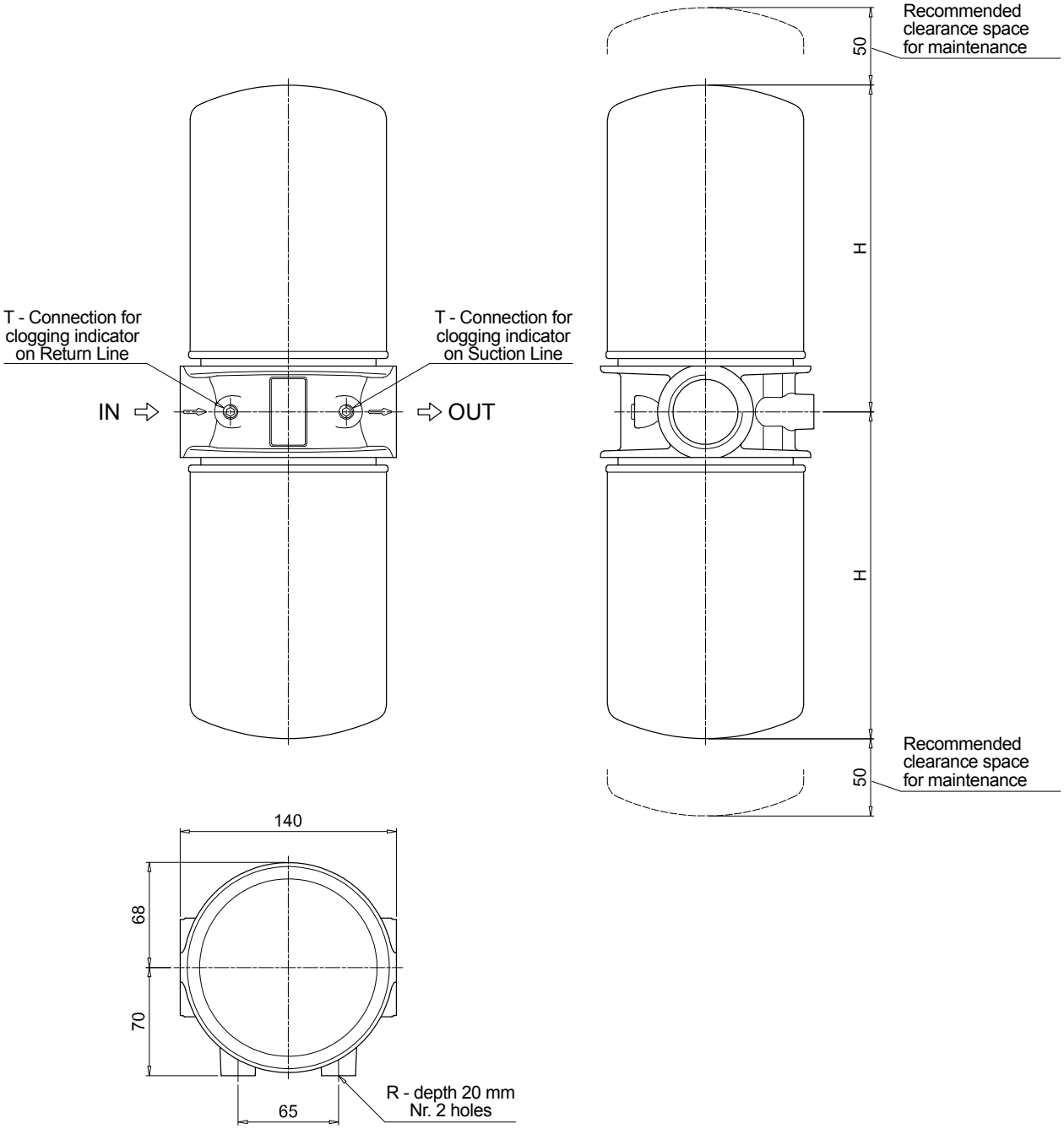

MPS MPS300 - MPS350 MPS301 - MPS351

Designation & Ordering code

COMPLETE FILTER

Configuration example : MPS300 | R | F1 | A10 | A | P01

Series and size

MPS300 | **MPS350** With connections for clogging indicators
MPS301 | **MPS351** With connections for differential indicators

Bypass valve		MPS 300 - 350	MPS 301 - 351
R	Return: 1.75 bar	•	•
S	Suction: 30 kPa	•	
U	Without bypass	•	
P	Without bypass		•

Connections

G1	G 1 1/2”
G2	1 1/2” NPT
G3	SAE 24 - 1 7/8” - 12 UN
F1	1 1/2” SAE 3000 psi/M
F2	1 1/2” SAE 3000 psi/UNC

Filtration rating (filter media)

A03	Inorganic microfiber 3 µm	**M25**	Wire mesh 25 µm
A06	Inorganic microfiber 6 µm	**M60**	Wire mesh 60 µm
A10	Inorganic microfiber 10 µm	**M90**	Wire mesh 90 µm
A25	Inorganic microfiber 25 µm	**P10**	Resin impregnated paper 10 µm
		P25	Resin impregnated paper 25 µm

Seal

A	NBR

Execution

P01	MP Filtri standard

CARTRIDGE

Configuration example: CS100 | A10 | A | P01

Cartridge series and size

CS100 | **CS150**

Filtration rating (filter media)

A03	Inorganic microfiber 3 µm	**M25**	Wire mesh 25 µm
A06	Inorganic microfiber 6 µm	**M60**	Wire mesh 60 µm
A10	Inorganic microfiber 10 µm	**M90**	Wire mesh 90 µm
A25	Inorganic microfiber 25 µm	**P10**	Resin impregnated paper 10 µm
		P25	Resin impregnated paper 25 µm

Seals

A	NBR

Execution

P01	MP Filtri standard
Pxx	Customized

ACCESSORIES

Clogging indicators on RETURN line		page
BVA	Axial pressure gauge	315
BVR	Radial pressure gauge	315
BVP	Visual pressure indicator with automatic reset	316
BVQ	Visual pressure indicator with manual reset	316
BEA	Electrical pressure indicator	314
BEM	Electrical pressure indicator	314
BLA	Electrical / visual pressure indicator	314-315

Clogging indicators on SUCTION line		page
VVB	Axial pressure gauge	313
VVS	Radial pressure gauge	313
VEB	Electrical vacuum indicator	312
VLB	Electrical/visual vacuum indicator	312

Differential indicators		page
DEA	Electrical differential indicator	317
DEM	Electrical differential indicator	317-318
DLA	Electrical / visual differential indicator	318-319
DLE	Electrical / visual differential indicator	319
DTA	Electronic differential indicator	320
DVA	Visual differential indicator	320
DVM	Visual differential indicator	320

MPS300 - MPS350

Filter size	H [mm]
300	266
350	315

Connections	T	R
G1	G 1/8"	M10
G2-G3	1/8" NPT	7/16" UNC
F1	G 1/8"	M10
F2	1/8" NPT	7/16" UNC

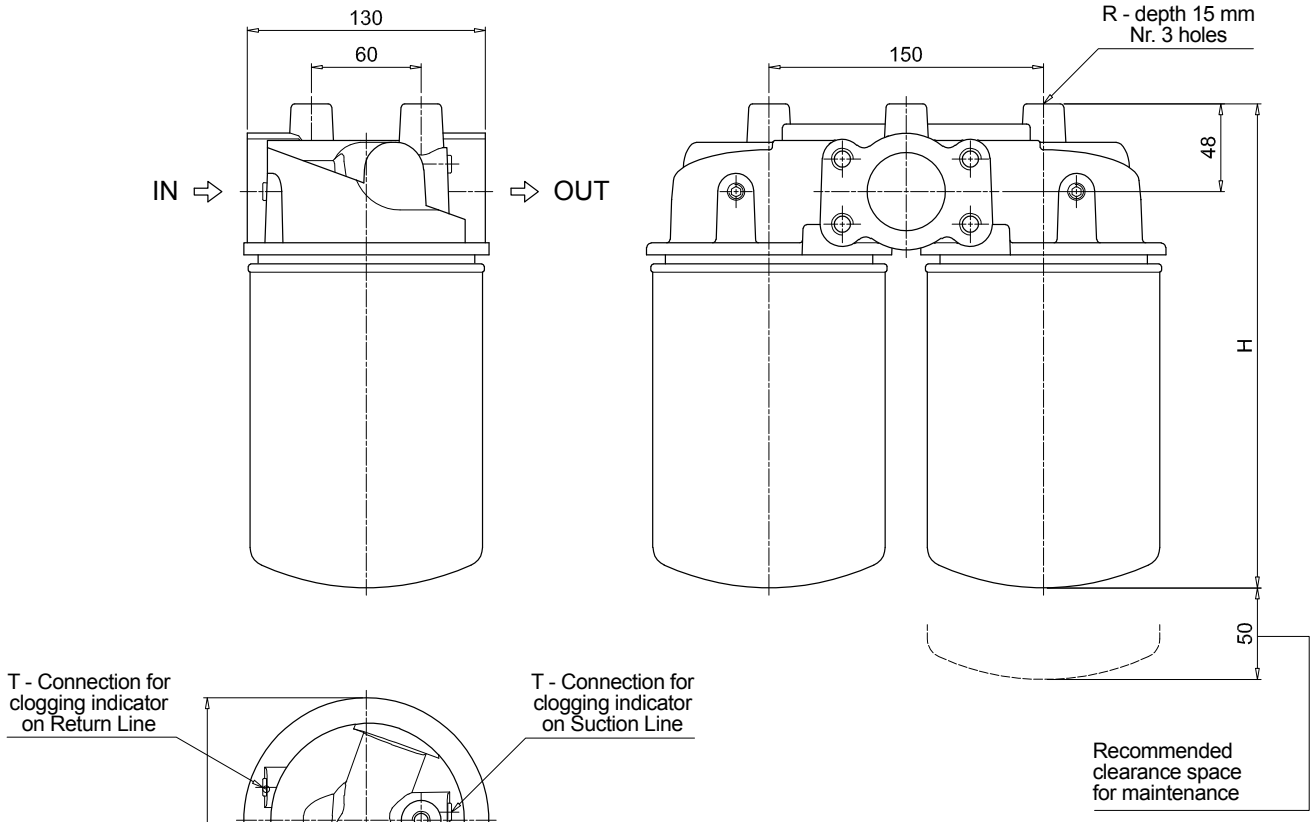

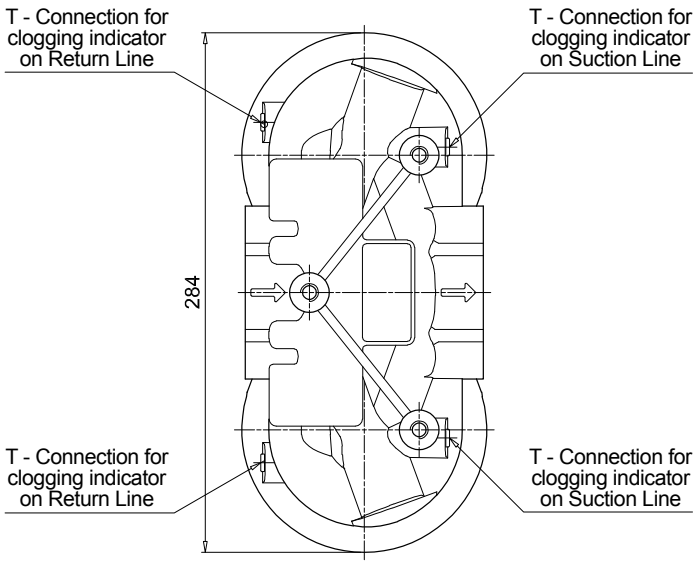

Dimensions

MPS301 - MPS351

Filter size	H [mm]
301	266
351	315

Connections	R
G1	M10
G2-G3	7/16" UNC
F1	M10
F2	7/16" UNC

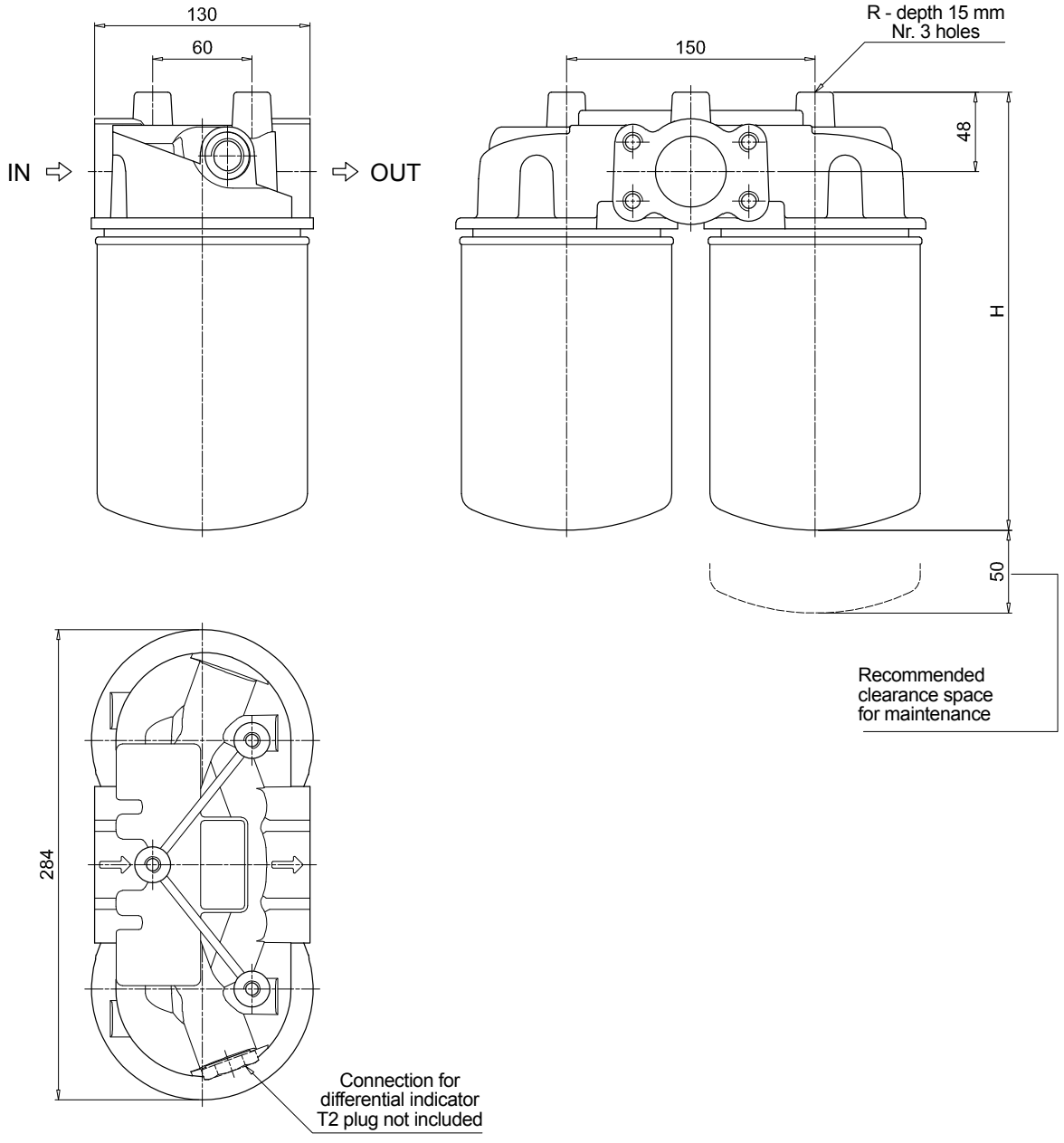

MSH series

Maximum working pressure up to 3.5 MPa (35 bar) - Flow rate up to 195 l/min



MSH GENERAL INFORMATION

Description

Spin-on filters

Maximum working pressure up to 3.5 MPa (35 bar)
Flow rate up to 195 l/min

MSH is a range of spin-on filters suitable to be used in low pressure lines. They offer a good balance between performances, dimensions and prices. They are directly connected to the lines of the system through the hydraulic fittings.

Available features:
- Female threaded connections up to 1 1/4", for a maximum flow rate of 195 l/min
- Fine filtration rating, to get a good cleanliness level into the reservoir
- Strong sealing between the housing and cans, to be used in heavy applications
- Bypass valve, to relieve excessive pressure drop across the filter media
- Visual, electrical and electronic differential clogging indicators for low pressure applications

Common applications:
- Delivery lines, in economic industrial equipment or mobile machines

Technical data

Filter housing materials
- Head: Anodized Aluminium
- Bypass valve: Nylon - Steel
- Element: Aluminium - Painted Steel

Bypass valve
Opening pressure: 250 kPa (2.5 bar) ±10%

Δp element type
- Δp: 5 bar
- Oil flow from OUT to IN

Seals
- Standard NBR - series A
- Optional FPM - series V

Temperature
From -20 °C to +110 °C

Note
MSH filters are provided for vertical mounting



Weights [kg] and volumes [dm³]

Filter series	Weights [kg]	Volumes [dm³]
MSH 050	1.50	0.65
MSH 070	1.90	0.95
MSH 100	3.30	1.80
MSH 150	3.80	2.20

Cartridge

CH



Thread connections	
Type	Connection
CH 050 - 070	M32 x 2
CH 100 - 150	M45 x 2

Hydraulic symbols

Filter series	Style S	Style B
MSH 050	•	•
MSH 070	•	•
MSH 100	•	•
MSH 150	•	•

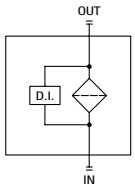

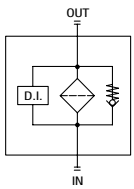

Pressure drop

Bypass valve pressure drop

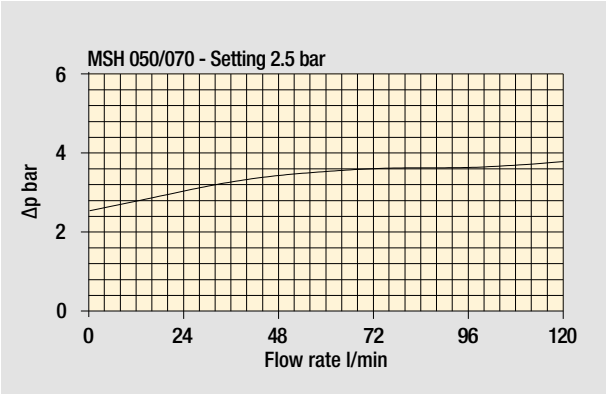

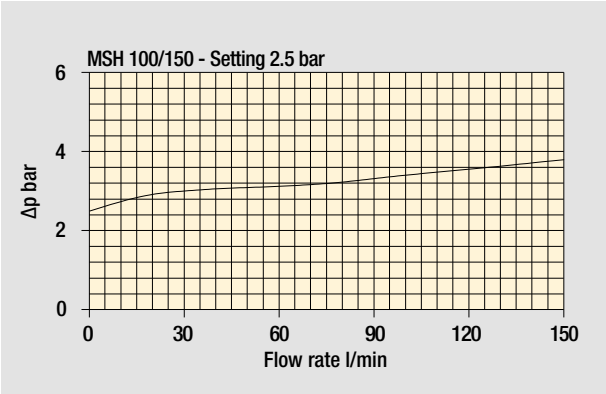

The curves are plotted using mineral oil with density of 0.86 kg/dm^3 in compliance with ISO 3968. Δp varies proportionally with density.

Designation & Ordering code

COMPLETE FILTER

Configuration example : MSH050 | B | A | G1 | A10 | P01

Series and size

MSH050 | **MSH070** | **MSH100** | **MSH150**

Bypass valve

S	Without bypass
B	2.5 bar

Seal

A	NBR

Connections	MSH 050 - 070	MSH 100 - 150
G1	G 1”	G 1 1/2”
G2	G 3/4”	G 1 1/4”
G3	1” NPT	1 1/2” NPT
G4	3/4” NPT	1 1/4” NPT
G5	SAE 16 - 1 5/16” - 12 UN	SAE 24 - 1 7/8” - 12 UN
G6	SAE 12 - 1 1/16” - 12 UN	SAE 20 - 1 5/8” - 12 UN

Filtration rating (filter media)

A03	Inorganic microfiber 3 µm	**M25**	Wire mesh 25 µm
A06	Inorganic microfiber 6 µm	**M60**	Wire mesh 60 µm
A10	Inorganic microfiber 10 µm	**M90**	Wire mesh 90 µm
A25	Inorganic microfiber 25 µm	**P10**	Resin impregnated paper 10 µm
		P25	Resin impregnated paper 25 µm

Execution

P01	MP Filtri standard

CARTRIDGE

Configuration example: CH050 | A10 | A | P01

Cartridge series and size

CH050 | **CH070** | **CH100** | **CH150**

Filtration rating (filter media)

A03	Inorganic microfiber 3 µm	**M25**	Wire mesh 25 µm
A06	Inorganic microfiber 6 µm	**M60**	Wire mesh 60 µm
A10	Inorganic microfiber 10 µm	**M90**	Wire mesh 90 µm
A25	Inorganic microfiber 25 µm	**P10**	Resin impregnated paper 10 µm
		P25	Resin impregnated paper 25 µm

Seal

A	NBR

Execution

P01	MP Filtri standard
Pxx	Customized

ACCESSORIES

Differential indicators

		page
DEA	Electrical differential indicator	317
DEM	Electrical differential indicator	317-318
DLA	Electrical / visual differential indicator	318-319
DLE	Electrical / visual differential indicator	319
DTA	Electronic differential indicator	320
DVA	Visual differential indicator	320
DVM	Visual differential indicator	320

Additional features

		page
T2	Plug	321

Dimensions

MSH050 - MSH070

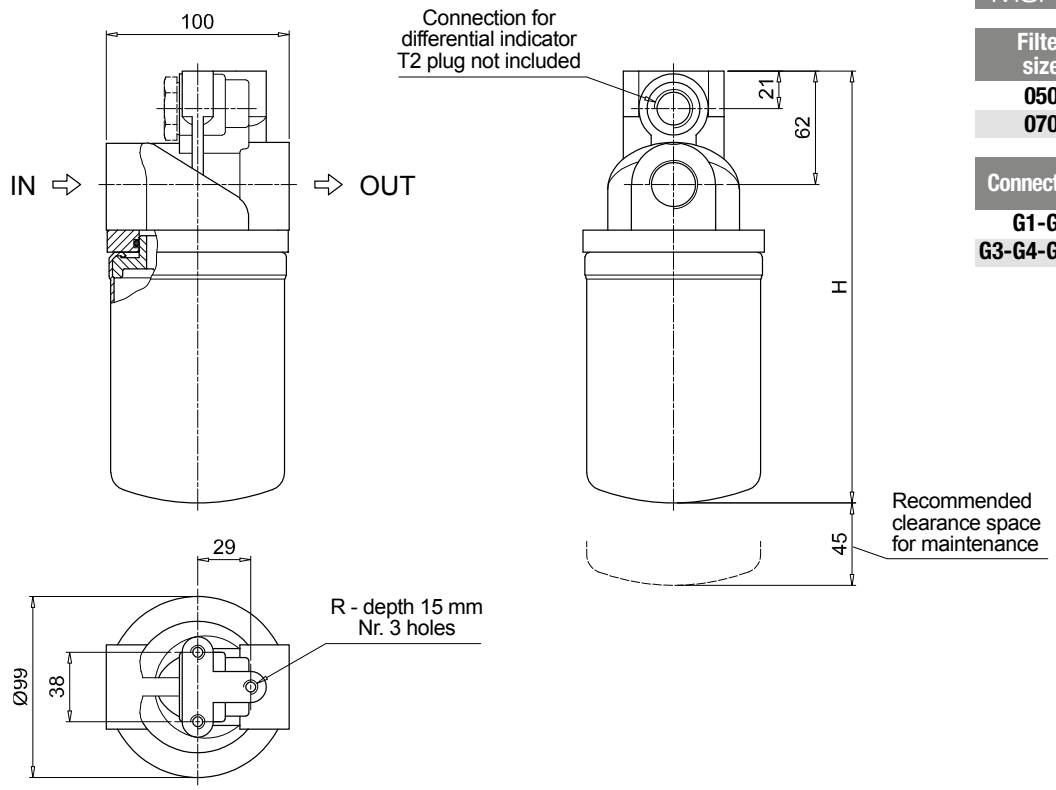

Filter size	H [mm]
050	236
070	324

Connections	R
G1-G2	M8
G3-G4-G5-G6	5/16" UNC

MSH100 - MSH150

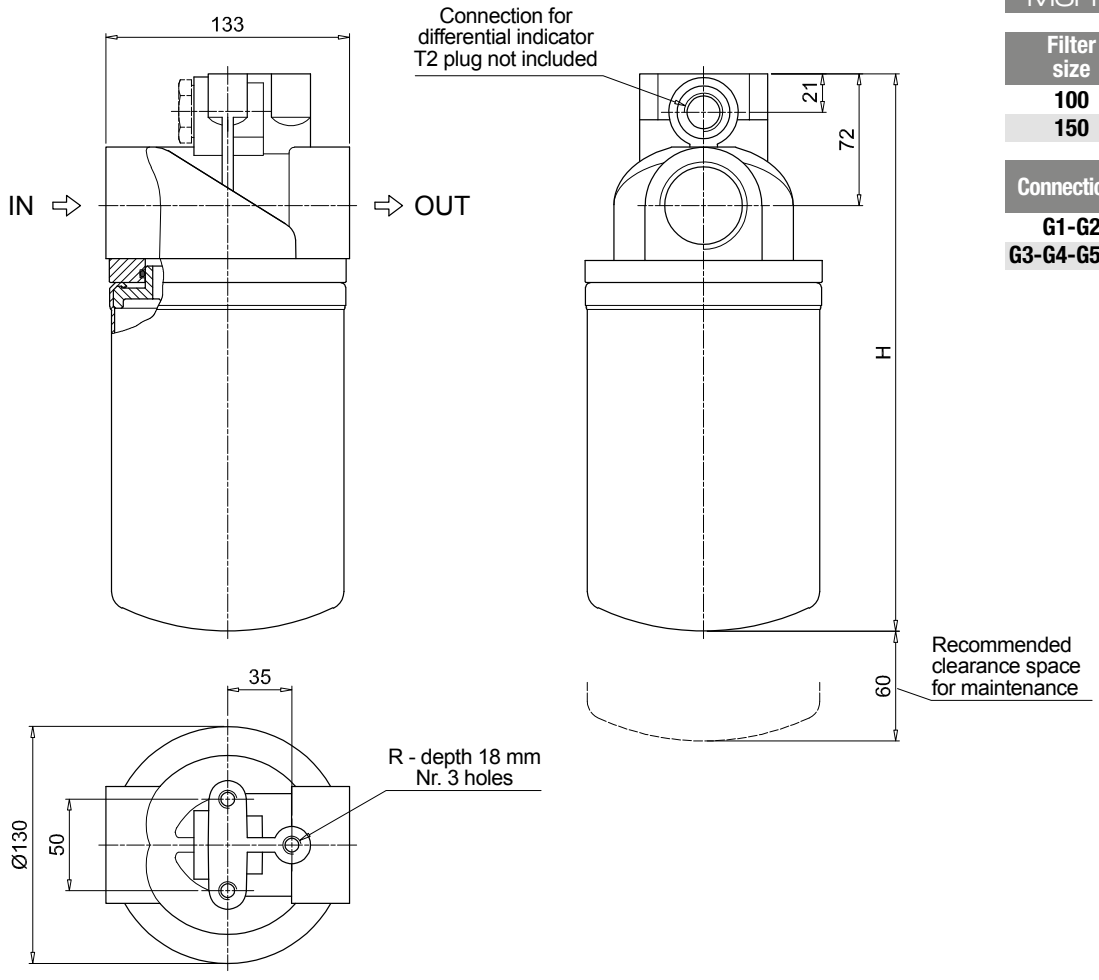

Filter size	H [mm]
100	311
150	354

Connections	R
G1-G2	M10
G3-G4-G5-G6	3/8" UNC

Order number for spare parts

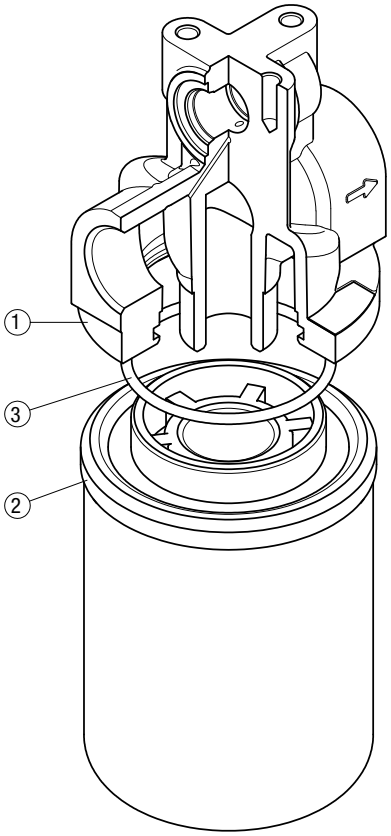

Item:	Q.ty: 1 pc. 1	Q.ty: 1 pc. 2	Q.ty: 1 pc. 3
Filter series	**Filter assembly**	**Cartridge**	**Seal code number**
MSH 050-070	See order table	See order table	O-R 167 (ø 63.50 x 3.53)
MSH 100-150			O-R 4362 (ø 91.67 x 3.53)

Clogging indicators

Barometric indicators
Vacuum indicators
Differential indicators

Introduction

Filter elements are efficient only if their Dirt Holding Capacity is fully exploited. This is achieved by using filter housings equipped with clogging indicators.
These devices trip when the clogging of the filter element causes an increase in pressure drop across the filter element.
The indicator is set to alarm before the element becomes fully clogged.
MP Filtri can supply indicators of the following designs:

- **Vacuum switches and gauges**
- **Pressure switches and gauges**
- **Differential pressure indicators**

These type of devices can be provided with a visual, electrical or both signals.

Suitable indicator types

VACUUM INDICATORS
Vacuum indicators are used on the Suction line to check the efficiency of the filter element.
They measure the pressure downstream of the filter element.
Standard items are produced with R 1/4" EN 10226 connection.
Available products with R 1/8" EN 10226 to be fitted on MPS series.

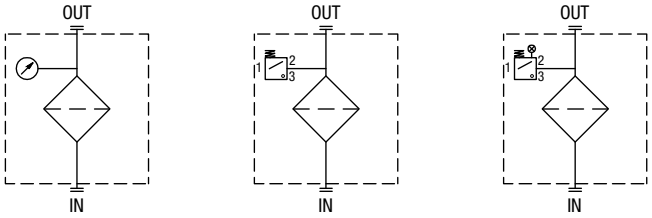

BAROMETRIC INDICATORS
Pressure indicators are used on the Return line to check the efficiency of the filter element.
They measure the pressure upstream of the filter element.
Standard items are produced with R 1/8" EN 10226 connection.

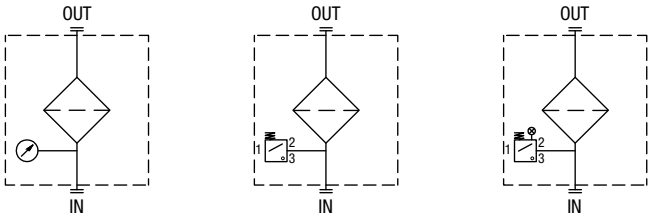

DIFFERENTIAL INDICATORS
Differential indicators are used on the Pressure line to check the efficiency of the filter element.
They measure the pressure upstream and downstream of the filter element (differential pressure).
Standard items are produced with special connection G 1/2" size.
Also available in Stainless Steel models.

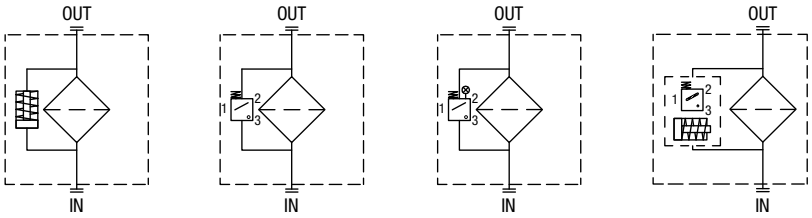

Quick reference guide

	Filter series	Visual indicator	Electrical indicator	Electrical / Visual indicator
Suction line	MPS 050 - 070 - 100 - 150 MPS 200 - 250 - 300 - 350	VVB16P01 VVS16P01	VEB21AA50P01	VLB21AA51P01 VLB21AA52P01 VLB21AA53P01 VLB21AA71P01
Return line	MPS 050 - 070 - 100 - 150 MPS 200 - 250 - 300 - 350	BVA14P01 BVR14P01 BVP20HP01 BVQ20HP01	BEA15HA50P01 BEM15HA41P01	BLA15HA51P01 BLA15HA52P01 BLA15HA53P01 BLA15HA71P01
In-line	MPS 051 - 071 - 101 - 151 MPS 301 - 351 MSH 050 - 070 - 100 - 150	DVA12xP01 DVM12xP01	DEA12xA50P01 DEM12xAxxP01	DLA12xA51P01 DLA12xA52P01 DLA12xA71P01 DLE12xA50P01 DLE12xF50P01

VACUUM INDICATORS

Dimensions

VE*50

Electrical Vacuum Indicator

R	Ordering code
EN 10226 - R1/8"	VE B 21 A A 50 P01

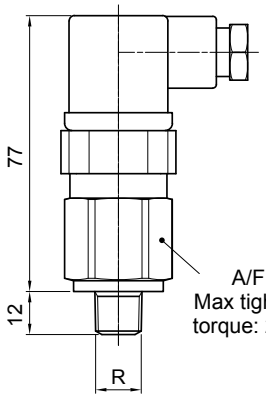

Hydraulic symbol

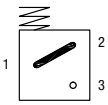

Electrical symbol

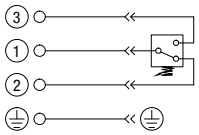

Materials

- Body: Brass
- Base: Black Nylon
- Contacts: Silver
- Seal: NBR

Technical data

- Vacuum setting: -0.21 bar ±10%
- Max working pressure: 10 bar
- Proof pressure: 15 bar
- Working temperature: From -25 °C to +80 °C
- Compatibility with fluids: Mineral oils, Synthetic fluids HFA, HFB, HFC according to ISO 2943
- Degree of protection: IP65 according to EN 60529

Electrical data

- Electrical connection: EN 175301-803
- Resistive load: 5 A / 14 Vdc
  4 A / 30 Vdc
  5 A / 125 Vac
  4 A / 250 Vac
- Available Atex product: II 1GD Ex ia IIC Tx Ex ia IIIC Tx°C X
- CE certification

VL*51 - VL*52 - VL*53

Electrical/Visual Vacuum Indicator

R	Ordering code
EN 10226 - R1/8"	VL B 21 A A xx P01

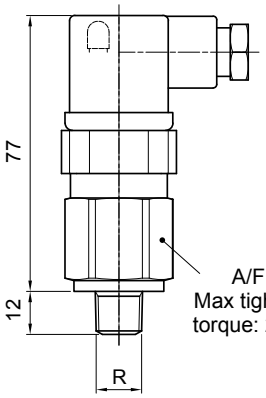

Hydraulic symbol

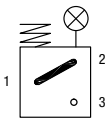

Electrical symbol

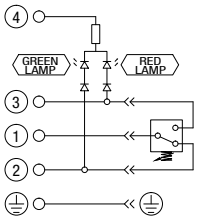

Materials

- Body: Brass
- Base: Transparent Nylon
- Contacts: Brass - Nylon
- Seal: NBR

Technical data

- Vacuum setting: -0.21 bar ±10%
- Max working pressure: 10 bar
- Proof pressure: 15 bar
- Working temperature: From -25 °C to +80 °C
- Compatibility with fluids: Mineral oils, Synthetic fluids HFA, HFB, HFC according to ISO 2943
- Degree of protection: IP65 according to EN 60529

Electrical data

- Electrical connection:	EN 175301-803		
- Type	51	52	53
- Lamps	24 Vdc	110 Vdc	230 Vac
- Resistive load:	1 A / 24 Vdc	1 A / 110 Vdc	1 A / 230 Vac

VL*71

Electrical/Visual Vacuum Indicator

Connections	Ordering code
EN 10226 - R1/8"	VL B 21 A A 71 P01

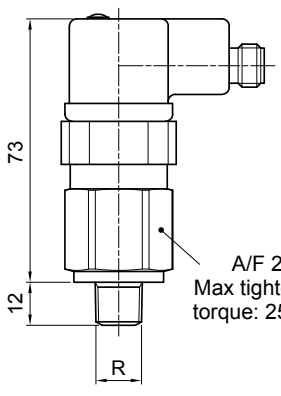

Hydraulic symbol

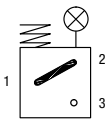

Electrical symbol

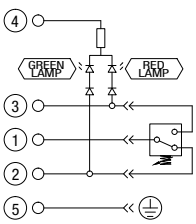

Materials

- Body: Brass
- Base: Black Nylon
- Contacts: Silver
- Seal: NBR

Technical data

- Vacuum setting: -0.21 bar ±10%
- Max working pressure: 10 bar
- Proof pressure: 15 bar
- Working temperature: From -25 °C to +80 °C
- Compatibility with fluids: Mineral oils, Synthetic fluids HFA, HFB, HFC according to ISO 2943
- Degree of protection: IP65 according to EN 60529

Electrical data

- Electrical connection: IEC 61076-2-101 D (M12)
- Lamps 24 Vdc
- Resistive load: 0.4 A / 24 Vdc

VVB

Axial Vacuum Gauge

R	Ordering code
EN 10226 - R1/8"	VV B 16 P01

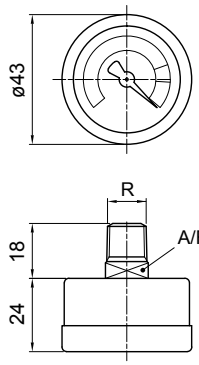

Hydraulic symbol



Dial scale

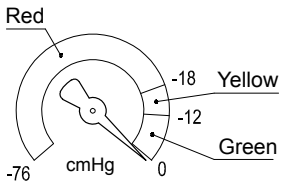

Conversion to SI units

[cmHg]	[bar]
-12	-0.16
-18	-0.24
-76	-1.01

Materials

- Case: Painted Steel
- Window: Transparent plastic
- Dial: Painted Steel
- Pointer: Painted Aluminium
- Pressure connection: Brass
- Pressure element: Bourdon tube Cu-alloy soft soldered

Technical data

- Max working pressure: Static: 7 bar; Fluctuating: 6 bar; Short time: 10 bar
- Working temperature: From -40 °C to +60 °C
- Compatibility with fluids: Mineral oils, Synthetic fluids; HFA, HFB, HFC according to ISO 2943
- Accuracy: Class 2.5 according to EN 13190
- Degree of protection: IP31 according to EN 60529

VVS

Radial Vacuum Gauge

R	Ordering code
EN 10226 - R1/8"	VV S 16 P01

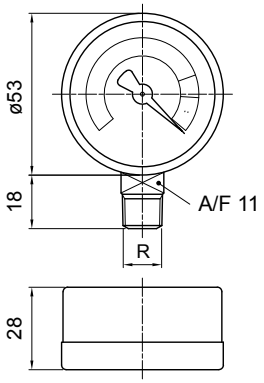

Hydraulic symbol



Dial scale

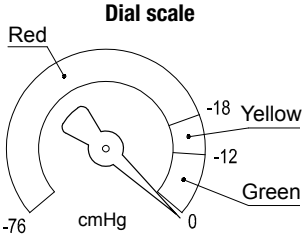

Conversion to SI units

[cmHg]	[bar]
-12	-0.16
-18	-0.24
-76	-1.01

Materials

- Case: Painted Steel
- Window: Transparent plastic
- Dial: Painted Steel
- Pointer: Painted Aluminium
- Pressure connection: Brass
- Pressure element: Bourdon tube Cu-alloy soft soldered

Technical data

- Max working pressure: Static: 7 bar; Fluctuating: 6 bar; Short time: 10 bar
- Working temperature: From -40 °C to +60 °C
- Compatibility with fluids: Mineral oils, Synthetic fluids; HFA, HFB, HFC according to ISO 2943
- Accuracy: Class 2.5 according to EN 13190
- Degree of protection: IP31 according to EN 60529

DESIGNATION & ORDERING CODE

Configuration example 1:	VE	B	21	A	A	50	P01
Configuration example 2:	VL	B	21	A	A	71	P01
Configuration example 3:	VV	S	16				P01

Series

VE Electrical vacuum indicator
VL Electrical/Visual vacuum indicator
VV Vacuum gauge

Type VE - VL

B Connection EN 10226 - R1/8"

Type VV

B Axial connection EN 10226 - R1/8"
S Radial connection EN 10226 - R1/8"

Vacuum setting	VE	VL	VV
16 -0.16 bar			•
21 -0.21 bar	•	•	

Seals	VE	VL	VV
A NBR	•	•	

Thermostat	VE	VL	VV
A Without	•	•	

Electrical connections	VE	VL	VV
50 Connection EN 175301-803	•		
51 Connection EN 175301-803, transparent base with lamps 24 Vdc		•	
52 Connection EN 175301-803, transparent base with lamps 110 Vdc		•	
53 Connection EN 175301-803, transparent base with lamps 230 Vdc		•	
71 Connection IEC 61076-2-101 D (M12), black base with lamps 24 Vdc		•	

Option

P01 MP Filtri standard
Pxx Customized

BAROMETRIC INDICATORS

Dimensions

BEA*50

Electrical Pressure Indicator

Settings	Ordering code
1.5 bar ±10%	BE A 15 H A 50 P01
2.0 bar ±10%	BE A 20 H A 50 P01

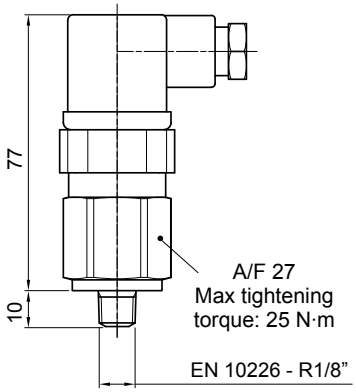

Hydraulic symbol

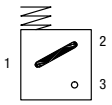

Electrical symbol

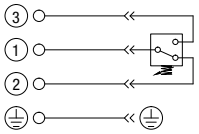

Materials
- Body: Brass
- Base: Black Nylon
- Contacts: Silver
- Seal: HNBR

Technical data
- Max working pressure: 40 bar
- Proof pressure: 60 bar
- Working temperature: From -25 °C to +80 °C
- Compatibility with fluids: Mineral oils, Synthetic fluids HFA, HFB, HFC according to ISO 2943
- Degree of protection: IP65 according to EN 60529

Electrical data
- Electrical connection: EN 175301-803
- Resistive load: 5 A / 14 Vdc
  4 A / 30 Vdc
  5 A / 125 Vac
  4 A / 250 Vac
- Available Atex product: II 1GD Ex ia IIC Tx Ex ia IIIC Tx°C X
- CE certification

BEM*41

Electrical Pressure Indicator

Settings	Ordering code
1.5 bar ±10%	BE M 15 H A 41 P01
2.0 bar ±10%	BE M 20 H A 41 P01

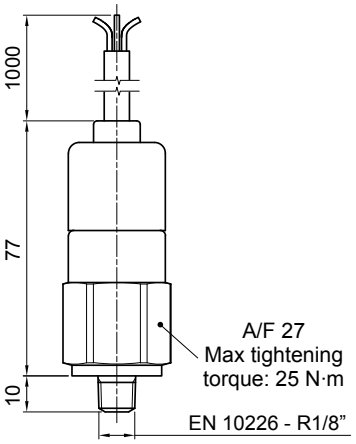

Hydraulic symbol

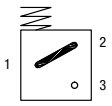

Electrical symbol

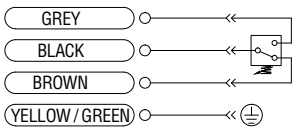

Materials
- Body: Brass
- Base: Black Nylon
- Contacts: Silver
- Seal: HNBR

Technical data
- Max working pressure: 40 bar
- Proof pressure: 60 bar
- Working temperature: From -25 °C to +80 °C
- Compatibility with fluids: Mineral oils, Synthetic fluids HFA, HFB, HFC according to ISO 2943
- Degree of protection: IP67 according to EN 60529

Electrical data
- Electrical connection: Four-core cable
- Resistive load: 5 A / 14 Vdc
  4 A / 30 Vdc
  5 A / 125 Vac
  4 A / 250 Vac
- CE certification

On request this indicator can be provided with main connectors in use for wirings.

BL*51 - BL*52 - BL*53

Electrical/Visual Pressure Indicator

Settings	Ordering code
1.5 bar ±10%	BL A 15 H A xx P01
2.0 bar ±10%	BL A 20 H A xx P01

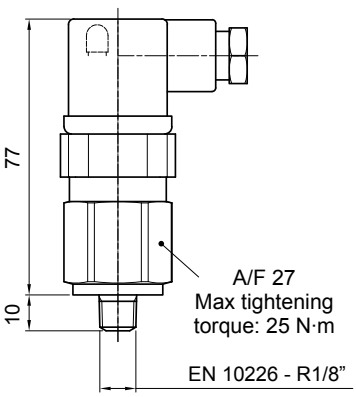

Hydraulic symbol

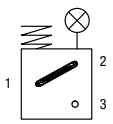

Electrical symbol

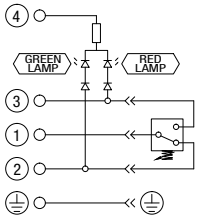

Materials
- Body: Brass
- Base: Transparent Nylon
- Contacts: Silver
- Seal: HNBR

Technical data
- Max working pressure: 40 bar
- Proof pressure: 60 bar
- Working temperature: From -25 °C to +80 °C
- Compatibility with fluids: Mineral oils, Synthetic fluids HFA, HFB, HFC according to ISO 2943
- Degree of protection: IP65 according to EN 60529

Electrical data

- Electrical connection:	EN 175301-803		
- Type	51	52	53
- Lamps	24 Vdc	110 Vdc	230 Vac
- Resistive load:	1 A / 24 Vdc	1 A / 110 Vdc	1 A / 230 Vac

BL*71

Electrical/Visual Pressure Indicator

Settings	Ordering code
1.5 bar ±10%	BL A 15 H A 71 P01
2.0 bar ±10%	BL A 20 H A 71 P01

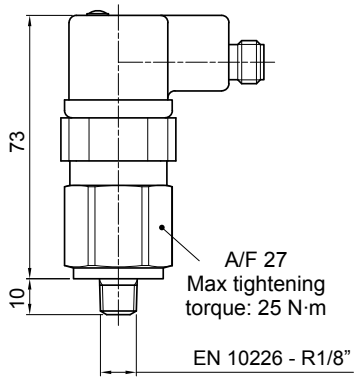

Hydraulic symbol

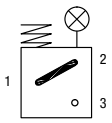

Electrical symbol

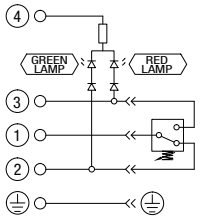

Materials
- Body: Brass
- Base: Black Nylon
- Contacts: Silver
- Seal: HNBR

Technical data
- Max working pressure: 40 bar
- Proof pressure: 60 bar
- Working temperature: From -25 °C to +80 °C
- Compatibility with fluids: Mineral oils, Synthetic fluids HFA, HFB, HFC according to ISO 2943
- Degree of protection: IP65 according to EN 60529

Electrical data
- Electrical connection: IEC 61076-2-101 D (M12)
- Lamps: 24 Vdc
- Resistive load: 0.4 A / 24 Vdc

BVA

Axial Pressure Gauge

Settings	Ordering code
1.4 bar ±10%	BV A 14 P01
2.5 bar ±10%	BV A 25 P01

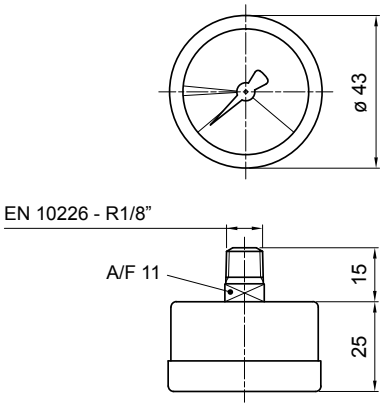

Hydraulic symbol



Dial scale

BV A 14 P01

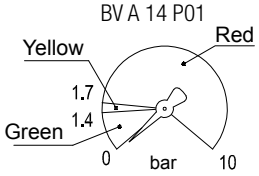

BV A 25 P01

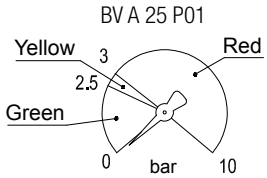

Materials
- Case: Painted Steel
- Window: Transparent plastic
- Dial: Painted Steel
- Pointer: Painted Aluminium
- Pressure connection: Brass
- Pressure element: Bourdon tube Cu-alloy soft soldered

Technical data
- Max working pressure: Static: 7 bar
  Fluctuating: 6 bar
  Short time: 10 bar
- Working temperature: From -40 °C to +60 °C
- Compatibility with fluids: Mineral oils, Synthetic fluids HFA, HFB, HFC according to ISO 2943
- Accuracy: Class 2.5 according to EN 13190
- Degree of protection: IP31 according to EN 60529

BVR

Radial Pressure Gauge

Settings	Ordering code
1.4 bar ±10%	BV R 14 P01
2.5 bar ±10%	BV R 25 P01

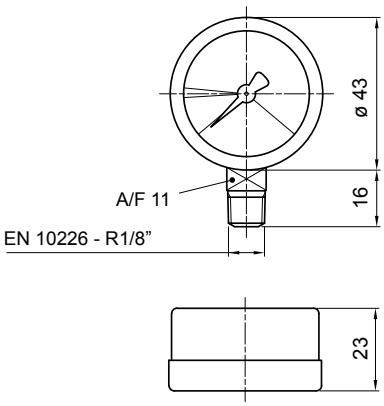

Hydraulic symbol



Dial scale

BV R 14 P01

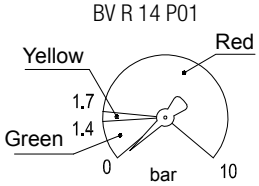

BV R 25 P01

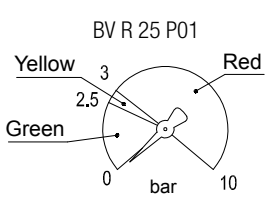

Materials
- Case: Painted Steel
- Window: Transparent plastic
- Dial: Painted Steel
- Pointer: Painted Aluminium
- Pressure connection: Brass
- Pressure element: Bourdon tube Cu-alloy soft soldered

Technical data
- Max working pressure: Static: 7 bar
  Fluctuating: 6 bar
  Short time: 10 bar
- Working temperature: From -40 °C to +60 °C
- Compatibility with fluids: Mineral oils, Synthetic fluids HFA, HFB, HFC according to ISO 2943
- Accuracy: Class 2.5 according to EN 13190
- Degree of protection: IP31 according to EN 60529

Dimensions

BVP - BVQ

Visual Pressure Indicator

Setting	Ordering code
1.5 bar ±10%	BV P 15 H P01
	BV Q 15 H P01
2.0 bar ±10%	BV P 20 H P01
	BV Q 20 H P01

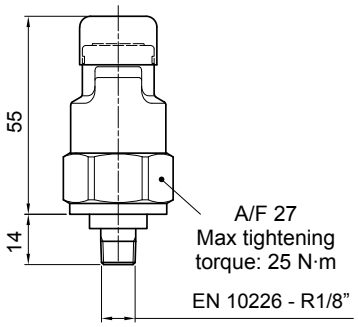

Hydraulic symbol

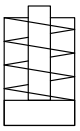

Materials

- Body: Brass
- Cover / internal parts: Nylon
- Caps: VMQ
- Seal: HNBR

Technical data

- Reset: BVP - Automatic reset; BVQ - Manual reset
- Max working pressure: 10 bar
- Proof pressure: 15 bar
- Working temperature: From -25 °C to +80 °C
- Compatibility with fluids: Mineral oils, Synthetic fluids HFA, HFB, HFC according to ISO 2943
- Degree of protection: IP45 according to EN 60529

Signals

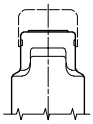

Absence of pressure (no indicator)

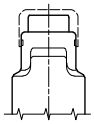

Presence of pressure (green button rises gradually)

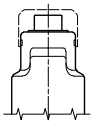

Clogged filter element (red button risen)

DESIGNATION & ORDERING CODE

Configuration example 1:	BE	M	15	H	A	41	P01
Configuration example 2:	BL	A	20	H	A	71	P01
Configuration example 3:	BV	R	14				P01
Configuration example 4:	BV	P	20	H			P01

Series

- **BE** Electrical pressure indicator
- **BL** Electrical/Visual pressure indicator
- **BV** Visual pressure indicator

Type	BE	BL	BV
A Standard type	•	•	
M With wired electrical connection	•		
A Axial connection pressure gauge			•
R Radial connection pressure gauge			•
P Visual indicator with automatic reset			•
Q Visual indicator with manual reset			•

Pressure setting	BEA-BEM	BLA	BVA-BVR	BVP-BVQ
14 1.4 bar			•	
15 1.5 bar	•	•		
20 2 bar	•	•		•
25 2.5 bar			•	

Seals	BE	BLA	BVA-BVR	BVP-BVQ
H HNBR	•	•		•

Thermostat	BEA-BEM	BLA	BV
A Without	•	•	

Electrical connections	BEA	BEM	BL	BV
10 Connection AMP Superseal series 1.5				
30 Connection Deutsch DT-04-2-P				
41 Connection via four-core cable		•		
50 Connection EN 175301-803	•			
51 Connection EN 175301-803, transparent base with lamps 24 Vdc			•	
52 Connection EN 175301-803, transparent base with lamps 110 Vdc			•	
53 Connection EN 175301-803, transparent base with lamps 230 Vdc			•	
71 Connection IEC 61076-2-101 D (M12), black base with lamps 24 Vdc			•	

Option

- **P01** MP Filtri standard
- **Pxx** Customized

DEA*50

Electrical Differential Indicator

Settings	Ordering code
1.2 bar ±10%	DE A 12 x A 50 P01
2.0 bar ±10%	DE A 20 x A 50 P01

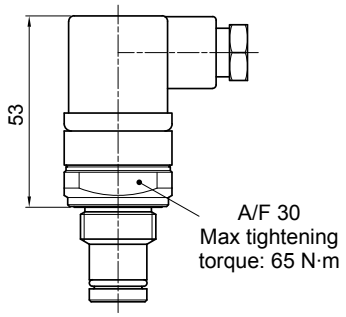

Hydraulic symbol

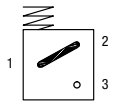

Electrical symbol

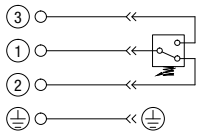

Materials
- Body: Brass
- Base: Black Nylon
- Contacts: Silver
- Seal: HNBR - FPM

Technical data
- Max working pressure: 420 bar
- Proof pressure: 630 bar
- Burst pressure: 1260 bar
- Working temperature: From -25 °C to +110 °C
- Compatibility with fluids: Mineral oils, Synthetic fluids HFA, HFB, HFC according to ISO 2943
- Degree protection: IP66 according to EN 60529 IP69K according to ISO 20653

Electrical data
- Electrical connection: EN 175301-803
- Resistive load: 0.2 A / 115 Vdc

DEM*10

Electrical Differential Indicator

Settings	Ordering code
1.2 bar ±10%	DE M 12 x x 10 P01
2.0 bar ±10%	DE M 20 x x 10 P01

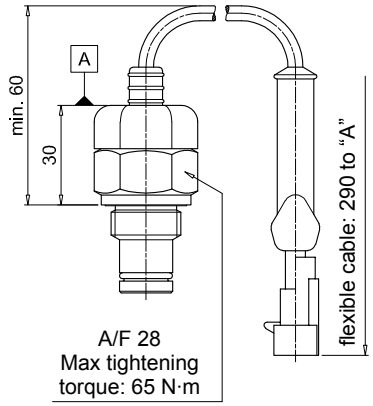

Hydraulic symbol

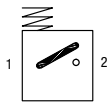

Electrical symbol

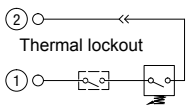

Materials
- Body: Brass
- Base: Black Nylon
- Contacts: Silver
- Seal: HNBR - FPM

Technical data
- Max working pressure: 420 bar
- Proof pressure: 630 bar
- Burst pressure: 1260 bar
- Working temperature: From -25 °C to +110 °C
- Compatibility with fluids: Mineral oils, Synthetic fluids HFA, HFB, HFC according to ISO 2943
- Degree protection: IP66 according to EN 60529

Electrical data
- Electrical connection: AMP Superseal series 1.5
- Resistive load: 0.2 A / 115 Vdc
- Switching type: Normally open contacts (NC on request)
- Thermal lockout: Normally open up to 30 °C (option "F")

DEM*20

Electrical Differential Indicator

Settings	Ordering code
1.2 bar ±10%	DE M 12 x x 20 P01
2.0 bar ±10%	DE M 20 x x 20 P01

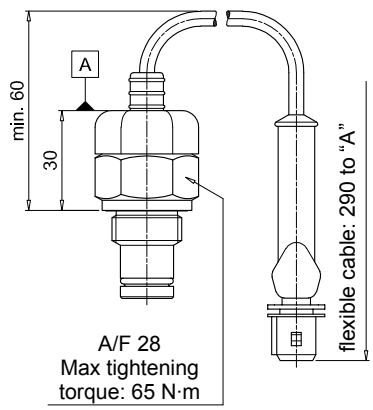

Hydraulic symbol

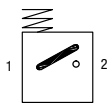

Electrical symbol

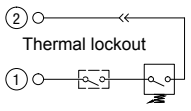

Materials
- Body: Brass
- Base: Black Nylon
- Contacts: Silver
- Seal: HNBR - FPM

Technical data
- Max working pressure: 420 bar
- Proof pressure: 630 bar
- Burst pressure: 1260 bar
- Working temperature: From -25 °C to +110 °C
- Compatibility with fluids: Mineral oils, Synthetic fluids HFA, HFB, HFC according to ISO 2943
- Degree protection: IP66 according to EN 60529

Electrical data
- Electrical connection: AMP Time junior
- Resistive load: 0.2 A / 115 Vdc
- Switching type: Normally open contacts (NC on request)
- Thermal lockout: Normally open up to 30 °C (option "F")

Dimensions

DEM*30

Electrical Differential Indicator

Settings	Ordering code
1.2 bar ±10%	DE M 12 x x 30 P01
2.0 bar ±10%	DE M 20 x x 30 P01

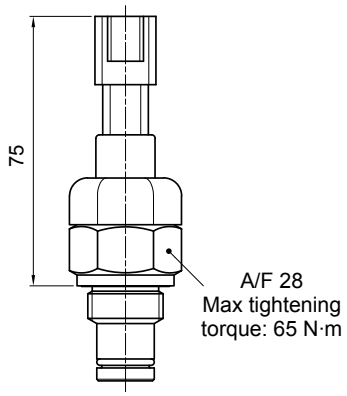

Hydraulic symbol

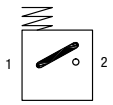

Electrical symbol

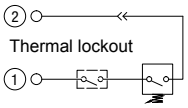

Materials
- Body: Brass
- Base: Black Nylon
- Contacts: Silver
- Seal: HNBR - FPM

Technical data
- Max working pressure: 420 bar
- Proof pressure: 630 bar
- Burst pressure: 1260 bar
- Working temperature: From -25 °C to +110 °C
- Compatibility with fluids: Mineral oils, Synthetic fluids HFA, HFB, HFC according to ISO 2943
- Degree protection: IP66 according to EN 60529

Electrical data
- Electrical connection: Deutsch DT-04-2-P
- Resistive load: 0.2 A / 115 Vdc
- Switching type: Normally open contacts (NC on request)
- Thermal lockout: Normally open up to 30 °C (option “F”)

DEM*35

Electrical Differential Indicator

Settings	Ordering code
1.2 bar ±10%	DE M 12 x x 35 P01
2.0 bar ±10%	DE M 20 x x 35 P01

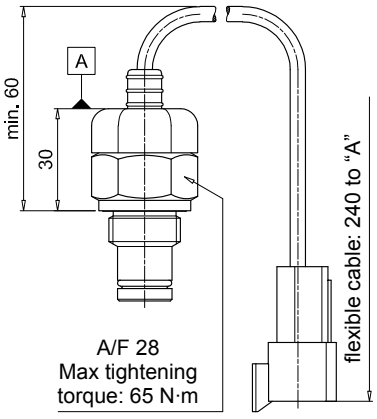

Hydraulic symbol

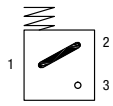

Electrical symbol

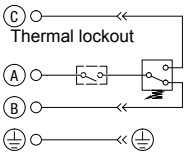

Materials
- Body: Brass
- Base: Black Nylon
- Contacts: Silver
- Seal: HNBR - FPM

Technical data
- Max working pressure: 420 bar
- Proof pressure: 630 bar
- Burst pressure: 1260 bar
- Working temperature: From -25 °C to +110 °C
- Compatibility with fluids: Mineral oils, Synthetic fluids HFA, HFB, HFC according to ISO 2943
- Degree protection: IP66 according to EN 60529

Electrical data
- Electrical connection: Deutsch DT-04-3-P
- Resistive load: 0.2 A / 115 Vdc
- Switching type: SPDT contact
- Thermal lockout: Normally open up to 30 °C (option “F”)

DLA*51 - DLA*52

Electrical/Visual Differential Indicator

Settings	Ordering code
1.2 bar ±10%	DL A 12 x A xx P01
2.0 bar ±10%	DL A 20 x A xx P01

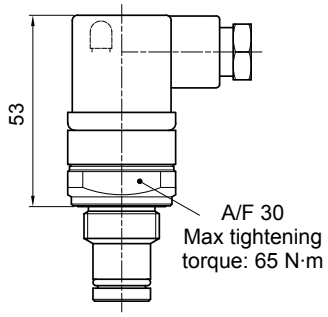

Hydraulic symbol

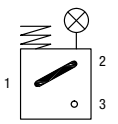

Electrical symbol

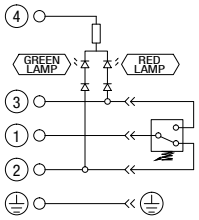

Materials
- Body: Brass
- Base: Transparent Nylon
- Contacts: Silver
- Seal: HNBR - FPM

Technical data
- Max working pressure: 420 bar
- Proof pressure: 630 bar
- Burst pressure: 1260 bar
- Working temperature: From -25 °C to +110 °C
- Compatibility with fluids: Mineral oils, Synthetic fluids HFA, HFB, HFC according to ISO 2943
- Degree protection: IP66 according to EN 60529 IP69K according to ISO 20653

Electrical data

Electrical connection:	EN 175301-803	
Type	51	52
Lamps	24 Vdc	110 Vdc
Resistive load:	1 A / 24 Vdc	1 A / 110 Vdc

DLA*71

Electrical/Visual Differential Indicator

Settings	Ordering code
1.2 bar ±10%	DL A 12 x A 71 P01
2.0 bar ±10%	DL A 20 x A 71 P01

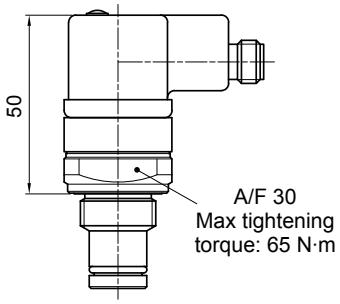

Hydraulic symbol

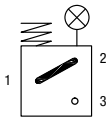

Electrical symbol

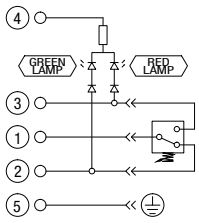

Materials
- Body: Brass
- Base: Black Nylon
- Contacts: Silver
- Seal: HNBR - FPM

Technical data
- Max working pressure: 420 bar
- Proof pressure: 630 bar
- Burst pressure: 1260 bar
- Working temperature: From -25 °C to +110 °C
- Compatibility with fluids: Mineral oils, Synthetic fluids HFA, HFB, HFC according to ISO 2943
- Degree protection: IP65 according to EN 60529 IP69K according to ISO 20653

Electrical data
- Electrical connection: IEC 61076-2-101 D (M12)
- Lamps 24 Vdc
- Resistive load: 0.4 A / 24 Vdc

DLE*A50

Electrical/Visual Differential Indicator

Settings	Ordering code
1.2 bar ±10%	DL E 12 x A 50 P01
2.0 bar ±10%	DL E 20 x A 50 P01

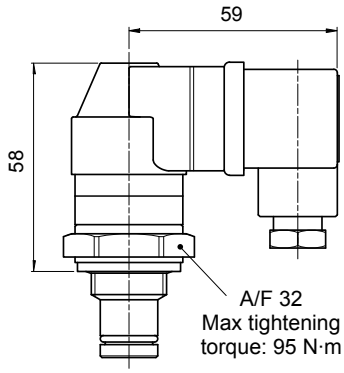

Hydraulic symbol

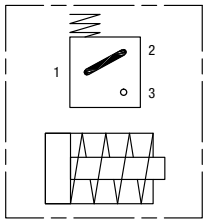

Electrical symbol

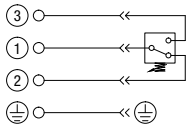

Materials
- Body: Brass
- Base: Black Nylon
- Contacts: Silver
- Seal: HNBR - FPM

Technical data
- Max working pressure: 420 bar
- Proof pressure: 630 bar
- Burst pressure: 1260 bar
- Working temperature: From -25 °C to +110 °C
- Compatibility with fluids: Mineral oils, Synthetic fluids HFA, HFB, HFC according to ISO 2943
- Degree protection: IP65 according to EN 60529

Electrical data
- Electrical connections: EN 175301-803
- Resistive load: 5 A / 250 Vac
- Available the connector with lamps

DLE*F50

Electrical/Visual Differential Indicator

Settings	Ordering code
1.2 bar ±10%	DL E 12 x F 50 P01
2.0 bar ±10%	DL E 20 x F 50 P01

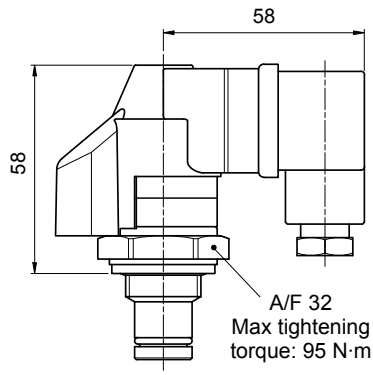

Hydraulic symbol

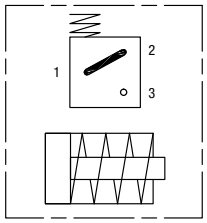

Electrical symbol

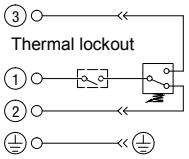

Materials
- Body: Brass
- Base: Black Nylon
- Contacts: Silver
- Seal: HNBR - FPM

Technical data
- Max working pressure: 420 bar
- Proof pressure: 630 bar
- Burst pressure: 1260 bar
- Working temperature: From -25 °C to +110 °C
- Compatibility with fluids: Mineral oils, Synthetic fluids HFA, HFB, HFC according to ISO 2943
- Degree protection: IP65 according to EN 60529

Electrical data
- Electrical connections: EN 175301-803
- Resistive load: 5 A / 250 Vac
- Thermal lockout setting: +30 °C

DIFFERENTIAL INDICATORS

Dimensions

DTA*70

Electronic Differential Indicator

Settings	Ordering code
1.2 bar ±10%	DT A 12 x x 70 P01
2.0 bar ±10%	DT A 20 x x 70 P01

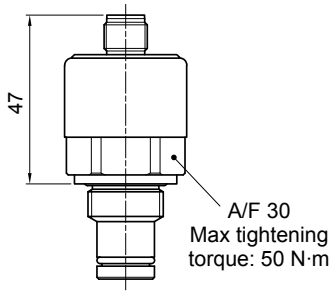

Hydraulic symbol

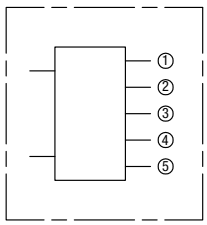

Electrical symbol

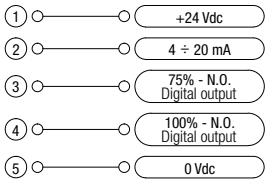

Materials

- Body: Brass
- Internal parts: Brass - Nylon
- Contacts: Silver
- Seal: HNBR - FPM

Industry 4.0 READY

Technical data

- Max working pressure: 420 bar
- Proof pressure: 630 bar
- Burst pressure: 1260 bar
- Compatibility with fluids: Mineral oils, Synthetic fluids HFA, HFB, HFC according to ISO 2943
- Degree protection: IP67 according to EN 60529

Electrical data

- Electrical connection: IEC 61076-2-101 D (M12)
- Power supply: 24 Vdc
- Analogue output: From 4 to 20 mA
- Thermal lockout: 30 °C (all output signals stalled up to 30 °C)

DVA

Visual Differential Indicator

Settings	Ordering code
1.2 bar ±10%	DV A 12 x P01
2.0 bar ±10%	DV A 20 x P01

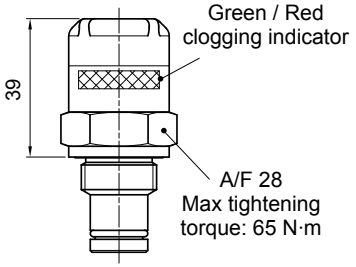

Hydraulic symbol

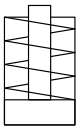

Materials

- Body: Brass
- Internal parts: Brass - Nylon
- Contacts: Silver
- Seal: HNBR - FPM

Technical data

- Reset: Automatic reset
- Max working pressure: 420 bar
- Proof pressure: 630 bar
- Burst pressure: 1260 bar
- Working temperature: From -25 °C to +110 °C
- Compatibility with fluids: Mineral oils, Synthetic fluids HFA, HFB, HFC according to ISO 2943
- Degree protection: IP65 according to EN 60529

DVM

Visual Differential Indicator

Settings	Ordering code
1.2 bar ±10%	DV M 12 x P01
2.0 bar ±10%	DV M 20 x P01

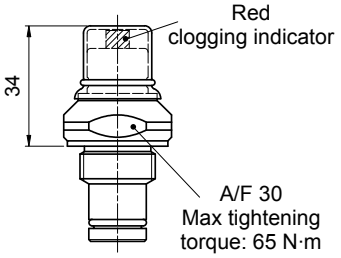

Hydraulic symbol

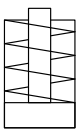

Materials

- Body: Brass
- Internal parts: Brass - Nylon
- Contacts: Silver
- Seal: HNBR - FPM

Technical data

- Reset: Manual reset
- Max working pressure: 420 bar
- Proof pressure: 630 bar
- Burst pressure: 1260 bar
- Working temperature: From -25 °C to +110 °C
- Compatibility with fluids: Mineral oils, Synthetic fluids HFA, HFB, HFC according to ISO 2943
- Degree protection: IP65 according to EN 60529

T2

Indicator plug

Seal	Ordering code
HNBR	T2 H
FPM	T2 V

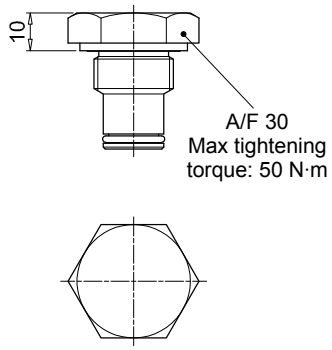

Materials

- Body: Phosphatized steel
- Seal: HNBR / FPM

DESIGNATION & ORDERING CODE - DIFFERENTIAL INDICATORS

Configuration example 1:	DE	M	12	H	F	50	P01
Configuration example 2:	DL	E	20	V	A	71	P01
Configuration example 3:	DT	A	12	H	F	70	P01
Configuration example 4:	DV	M	20	V			P01

Series

- **DE** Electrical differential indicator
- **DL** Electrical/Visual differential indicator
- **DT** Electronic differential indicator
- **DV** Visual differential indicator

Type

		DE	DL	DT	DV
A	Standard type	•	•	•	
M	With wired electrical connection	•			
E	For high power supply		•		

		DV
A	With automatic reset	
M	With manual reset	

Pressure setting

- **12** 1.2 bar
- **20** 2.0 bar

Seals

- **H** HNBR
- **V** FPM

Thermostat

		DEA	DEM	DLA	DLE	DT	DV
A	Without	•	•	•	•		
F	With thermostat		•		•	•	

Electrical connections

		DEA	DEM	DLA	DLE	DT	DV
10	Connection AMP Superseal series 1.5		•				
20	Connection AMP Timer Junior		•				
30	Connection Deutsch DT-04-2-P		•				
35	Connection Deutsch DT-04-3-P		•				
50	Connection EN 175301-803	•			•		
51	Connection EN 175301-803, transparent base with lamps 24 Vdc			•			
52	Connection EN 175301-803, transparent base with lamps 110 Vdc			•			
70	Connection IEC 61076-2-101 D (M12)					•	
71	Connection IEC 61076-2-101 D (M12), black base with lamps 24 Vdc			•			

Option

- **P01** MP Filtri standard
- **Pxx** Customized

DESIGNATION & ORDERING CODE - DIFFERENTIAL INDICATOR PLUG

Configuration example	T2	H

Series

- **T2** Indicator plug

Seals

- **H** HNBR
- **V** FPM

LMP - low and medium pressure filters are used as process filters to protect pumps, pressure reducers and hydraulic circuits from damage due to oil contamination as per ISO 4406.

LMP series is available in 5 different sizes: 100, 200, 400, 900 and 950 and a wide range of versions.

LMP filters are available with several working pressures suitable for all hydraulic circuits as:

- **return filters in external tank mounting construction for medium and high flow rates in single and duplex versions**
- **in-line filters for low and medium pressures for off-line applications**
- **in-line process filters for medium pressures, for example, for forced lubrication applications, in single or duplex versions**
- **in-line filters for medium pressures for filtering hydraulic boost circuits**
- **in-line filters as high holding capacity filters on test beds**

LMP filters are thus specifically designed to be suitable for a wide range of application: from steel plants to mobile equipments, from test benches to naval application, providing the right solution for filtering requirements in all sectors.

LMP filters are available in single, manifold and duplex versions (LMD series).

FILTER SIZING

For the proper corrective factor Y see chapter at page 24

Low & Medium Pressure filters



LMP 110 - 120 - 123 MULTIPORT	page 325
LMP 210 - 211	341
LMP 400 - 401 & 430 - 431	351
LMP 950 - 951	363
LMP 952 - 953 - 954	371
LMD 211	383
LMD 400 - 401 & 431	391
LMD 951	407

Filter element according to DIN 24550	page 415
LDP - LDD	417
LMP 900 - 901	427
LMP 902 - 903	435

INDICATORS	page 444
ACCESSORIES	page 450

LMP 110-120-123 series
MULTIPORT

Maximum working pressure up to 8 MPa (80 bar) - Flow rate up to 175 l/min



Description

Low & Medium Pressure filters

Maximum working pressure up to 8 MPa (80 bar)
Flow rate up to 175 l/min

LMP110 is a range of versatile low pressure filter for transmission, protection of sensitive components in low pressure hydraulic systems and filtration of the coolant into the machine tools.
They are directly connected to the lines of the system through the hydraulic fittings.

Available features:
- Female threaded connections up to 1", for a maximum return flow rate of 175 l/min
- Fine filtration rating, to get a good cleanliness level into the system
- Bypass valve, to relieve excessive pressure drop across the filter media
- Visual, electrical and electronic differential clogging indicators
- Multiport and multifunction schemes, to meet any type of application.
- LMP112: 3/4" additional input port
- LMP116: 3/4" additional output port
- LMP118: 3/4" bypass port, to send the bypass flow to the reservoir instead of the system
- LMP119: 3/4" relief port, to relief the input pressure in the filter, protecting the components downstream the filter against back pressure caused by the pressure drop (cold starts)
- LMP120: connections placed in the same side
- LMP122: connections placed in the same side and 1" additional output port
- LMP123: 2 and 3 bar integrated relief valve

Common applications:
Delivery lines, in any low pressure industrial equipment or mobile machines

Technical data

Filter housing materials
- Head: Aluminium
- Housing: Cataphoresis - Painted Steel
- Bypass valve: Brass - Aluminium

Pressure
- Test pressure: 12 MPa (120 bar)
- Burst pressure:
  LMP 110: 29 MPa (290 bar)
  LMP 120/130: 38 MPa (380 bar)
- Pulse pressure fatigue test: 1 000 000 cycles with pressure from 0 to 8 MPa (80 bar)

Bypass valve
- Opening pressure 350 kPa (3.5 bar) ±10%
- Other opening pressures on request.

Δp element type
- Microfibre filter elements - series N - W: 20 bar
- Wire mesh filter elements - series N: 20 bar
- Fluid flow through the filter element from OUT to IN

Seals
- Standard NBR series A
- Optional FPM series V

Temperature
From -25 °C to +110 °C

Note
LMP MULTIPORT filters are provided for vertical mounting



Weights [kg] and volumes [dm³]

Filter series	Weights [kg]				Volumes [dm³]				
	Length 1	2	3	4	Length 1	2	3	4
LMP 110-112-116-118-119	1.60	1.80	2.10	2.60	0.75	0.81	1.11	1.53
LMP 120-122	1.90	2.10	2.40	2.90	0.75	0.81	1.11	1.53
LMP 123	1.70	1.90	2.20	2.70	0.75	0.81	1.11	1.53

FILTER ASSEMBLY SIZING
Flow rates [l/min]

Filter series	Length	Filter element design - N Series							
		A03	A06	A10	A16	A25	M25 M60 M90 M250	P10	P25
LMP 110	1	40	42	65	69	85	163	117	120
	2	49	57	83	83	101	163	136	138
	3	66	70	92	102	124	164	142	144
	4	86	102	118	124	144	165	148	149
LMP 112	1	36	38	55	57	67	105	84	86
	2	44	49	66	66	76	105	93	94
	3	56	58	71	77	87	106	96	97
	4	67	77	85	88	97	106	99	99
LMP 116	1	36	38	54	56	64	96	79	80
	2	43	49	63	64	72	96	86	87
	3	54	57	68	73	82	96	88	89
	4	65	73	79	82	89	96	91	91
LMP 118	1	40	42	65	69	85	163	117	120
	2	49	57	83	83	101	163	136	138
	3	66	70	92	102	124	164	142	144
	4	86	102	118	124	144	165	148	149
LMP 120	1	40	43	66	70	87	172	121	125
	2	50	58	85	85	104	172	142	144
	3	67	71	94	105	129	173	149	151
	4	88	106	122	129	151	174	155	157
LMP 122	1	39	42	64	67	81	146	109	111
	2	49	56	80	80	96	146	124	126
	3	65	68	88	96	114	146	129	130
	4	82	97	110	115	131	147	134	135

Maximum flow rate for a complete low and medium pressure filter with a pressure drop Δp = 0.7 bar.
The reference fluid has a kinematic viscosity of 30 mm^2/s (cSt) and a density of 0.86 kg/dm^3.
For different pressure drop or fluid viscosity we recommend to use our selection software available on www.mpfiltri.com.
You can also calculate the right size using the formulas present on the FILTER SIZING paragraph at the beginning of the full catalogue or at the beginning of the filter family brochure.
Please, contact our Sales Department for further additional information.

Filter series	Length	Filter element design - N Series							
		A03	A06	A10	A16	A25	M25 M60 M90	P10	P25
LMP 123	1	35	37	50	52	59	83	70	71
	2	41	46	58	58	65	83	76	76
	3	51	53	62	65	72	83	77	78
	4	59	65	70	72	78	83	79	79

Maximum flow rate for a complete low and medium pressure filter with a pressure drop Δp = 2.7 bar.
The reference fluid has a kinematic viscosity of 30 mm^2/s (cSt) and a density of 0.86 kg/dm^3.
For different pressure drop or fluid viscosity we recommend to use our selection software available on www.mpfiltri.com.
You can also calculate the right size using the formulas present on the FILTER SIZING paragraph at the beginning of the full catalogue or at the beginning of the filter family brochure.
Please, contact our Sales Department for further additional information.

Pressure drop

Filter housings Δp pressure drop

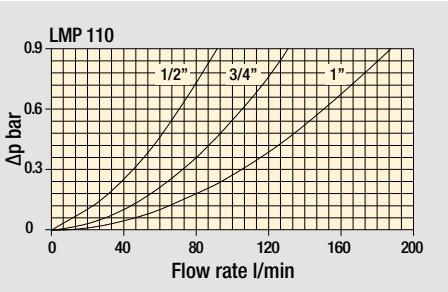

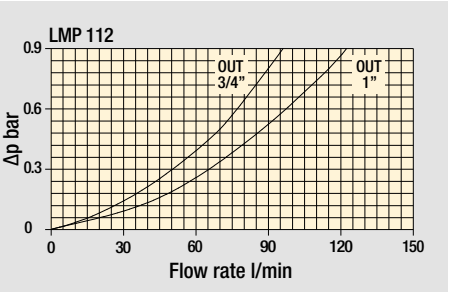

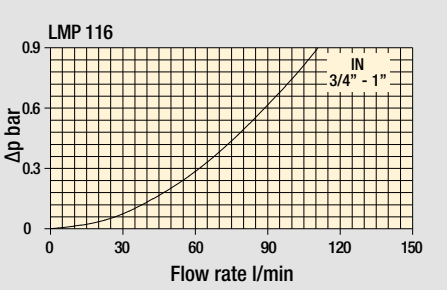

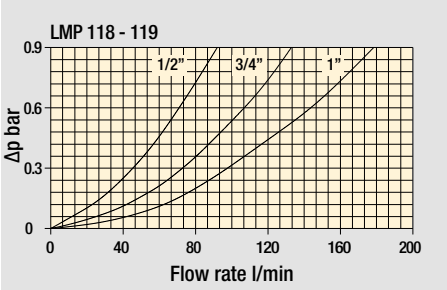

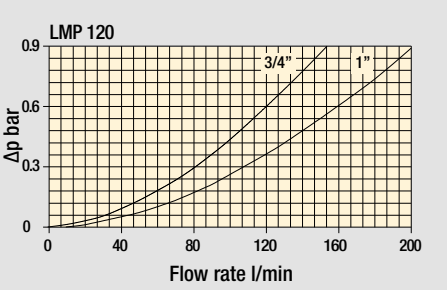

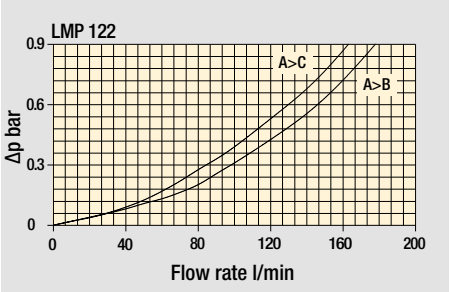

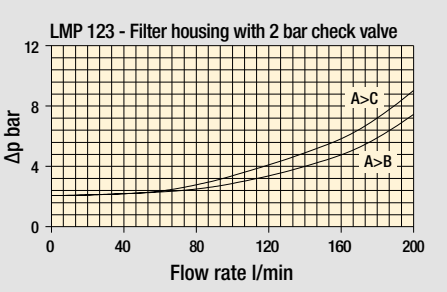

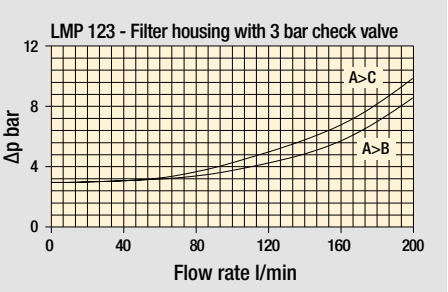

Bypass valve pressure drop

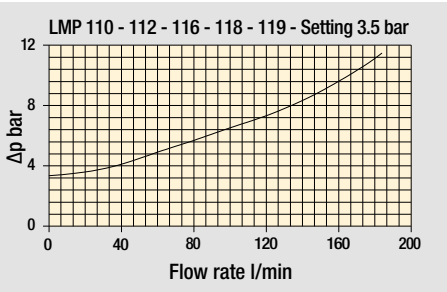

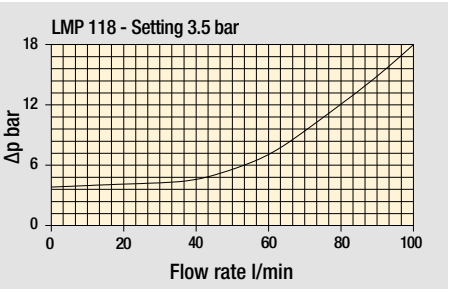

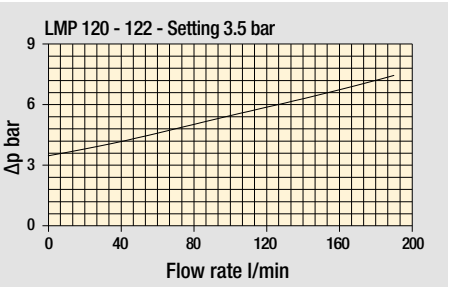

The curves are plotted using mineral oil with density of 0.86 kg/dm^3 in compliance with ISO 3968. Δp varies proportionally with density.

Hydraulic symbols - Multiport styles

LMP 110 — In-Line filter



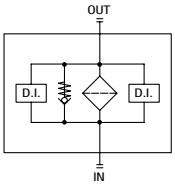

LMP 120 — Port IN-OUT on the same side



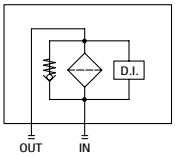

LMP 112 — Double IN port



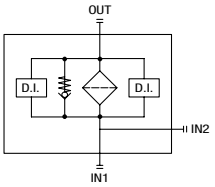

LMP 122 — Lateral OUT port high flow



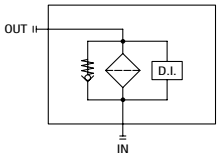

LMP 116 — Double OUT port



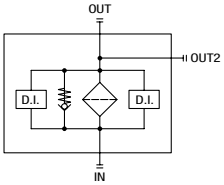

LMP 123 — Bypass valve

Type 1

for heat exchanger high flow



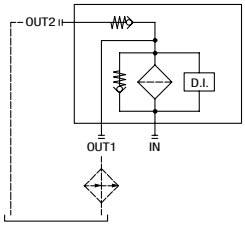

LMP 118 — Bypass lateral

Always cleaning fluid in OUT port



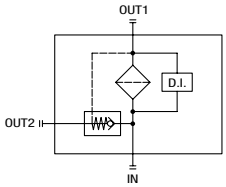

Type 2



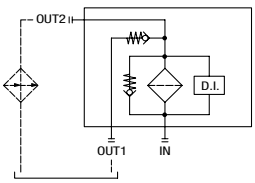

LMP 119 — Safety valve 6 bar

for heat exchanger



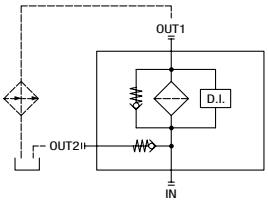

Designation & Ordering code

COMPLETE FILTER

Configuration example: LMP112 | 4 | B | A | D | 1 | A10 | N | P01

Series and size
LMP110 | LMP112 | LMP116

Length
1 | 2 | 3 | 4

Bypass valve

S	Without bypass	**B**	3.5 bar

Seals and treatments		Filtration rating Axx	Mxx	Pxx
A	NBR	•	•	•
V	FPM	•	•	•
W	NBR compatible with fluids HFA-HFB-HFC	•	•	

Connections

		Aux (only LMP 112 - 116)
A	G 3/4”	G 3/4”
B	G 1”	G 3/4”
C	3/4” NPT	3/4” NPT
D	1” NPT	3/4” NPT
E	SAE 12 - 1 1/16” - 12 UN	SAE 12 - 1 1/16” - 12 UN
F	SAE 16 - 1 5/16” - 12 UN	SAE 12 - 1 1/16” - 12 UN

Connection for differential indicator

1	Without
2	With standard connection
3	With connection on the opposite side
6	With two connections on both sides

Filtration rating (filter media)

A03	Inorganic microfiber 3 µm	**M25**	Wire mesh 25 µm
A06	Inorganic microfiber 6 µm	**M60**	Wire mesh 60 µm
A10	Inorganic microfiber 10 µm	**M90**	Wire mesh 90 µm
A16	Inorganic microfiber 16 µm	**P10**	Resin impregnated paper 10 µm
A25	Inorganic microfiber 25 µm	**P25**	Resin impregnated paper 25 µm

Element Δp

N	20 bar

Execution

P01	MP Filtri standard
Pxx	Customized

FILTER ELEMENT

Configuration example: CU110 | 4 | A10 | A | N | P01

Element series and size
CU110

Element length
1 | 2 | 3 | 4

Filtration rating (filter media)

A03	Inorganic microfiber 3 µm	**M25**	Wire mesh 25 µm
A06	Inorganic microfiber 6 µm	**M60**	Wire mesh 60 µm
A10	Inorganic microfiber 10 µm	**M90**	Wire mesh 90 µm
A16	Inorganic microfiber 16 µm	**P10**	Resin impregnated paper 10 µm
A25	Inorganic microfiber 25 µm	**P25**	Resin impregnated paper 25 µm

Seals		Filtration rating Axx	Mxx	Pxx
A	NBR	•	•	•
V	FPM	•	•	•
W	NBR compatible with fluids HFA-HFB-HFC	•	•	

Element Δp

N	20 bar

Execution

P01	MP Filtri standard
Pxx	Customized

ACCESSORIES

Differential indicators

		page
DEA	Electrical differential indicator	445
DEM	Electrical differential indicator	445-446
DLA	Electrical / visual differential indicator	446-447
DLE	Electrical / visual differential indicator	447
DTA	Electronic differential indicator	448
DVA	Visual differential indicator	448
DVM	Visual differential indicator	448

Additional features

		page
T2	Plug	449

LMP110 - LMP112 LMP116	
Filter length	**H [mm]**
1	182
2	215
3	265
4	365

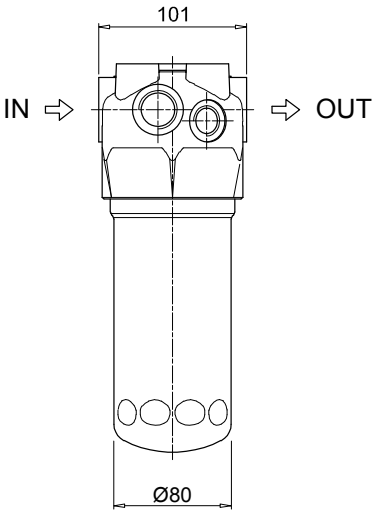

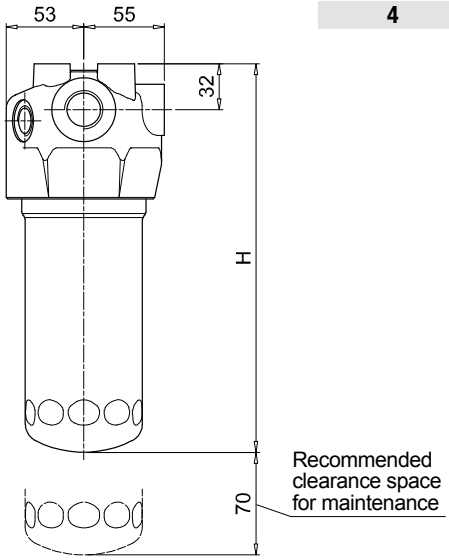

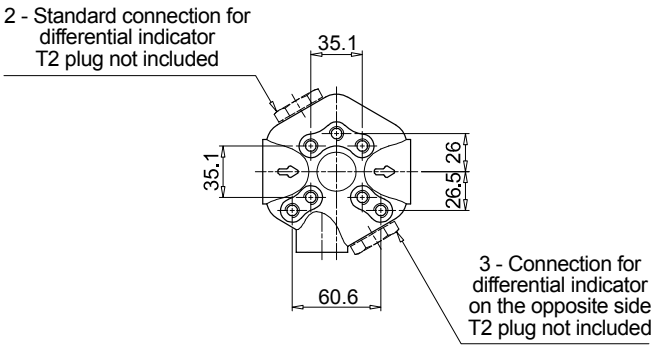

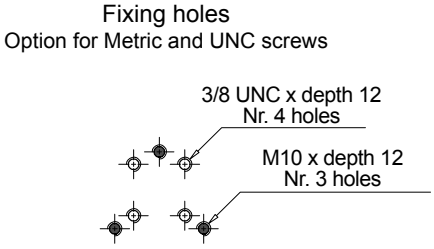

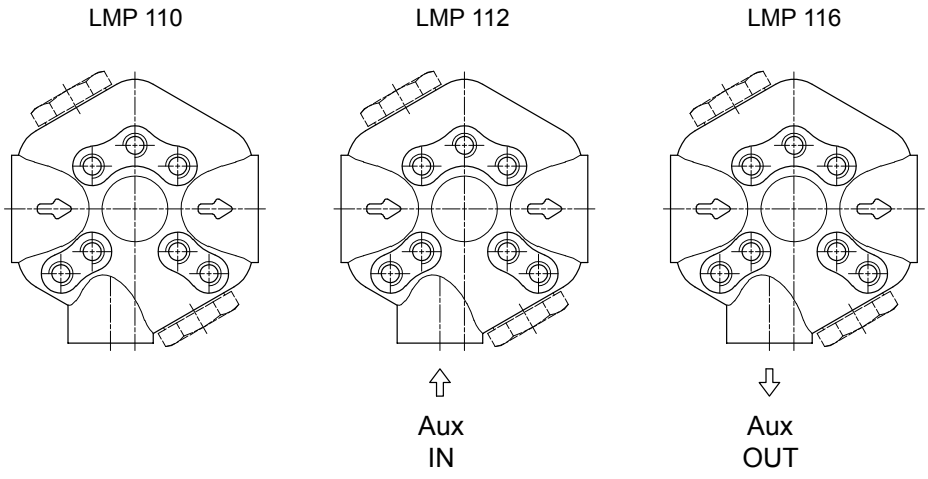

Designation & Ordering code

COMPLETE FILTER

Configuration example: LMP118 | 4 | B | A | D | 1 | A10 | N | P01

Series and size
LMP118 | **LMP119**

Length
1 | **2** | **3** | **4**

Bypass valve
B 3.5 bar

Seals and treatments

		Filtration rating Axx	Mxx	Pxx
A	NBR	•	•	•
V	FPM	•	•	•
W	NBR compatible with fluids HFA-HFB-HFC	•	•	

Connections

		Aux OUT
A	G 3/4”	G 3/4”
B	G 1”	G 3/4”
C	3/4” NPT	3/4” NPT
D	1” NPT	3/4” NPT
E	SAE 12 - 1 1/16” - 12 UN	SAE 12 - 1 1/16” - 12 UN
F	SAE 16 - 1 5/16” - 12 UN	SAE 12 - 1 1/16” - 12 UN

Connection for differential indicator
1 Without
2 With standard connection

Filtration rating (filter media)

A03	Inorganic microfiber 3 µm	**M25**	Wire mesh 25 µm
A06	Inorganic microfiber 6 µm	**M60**	Wire mesh 60 µm
A10	Inorganic microfiber 10 µm	**M90**	Wire mesh 90 µm
A16	Inorganic microfiber 16 µm	**P10**	Resin impregnated paper 10 µm
A25	Inorganic microfiber 25 µm	**P25**	Resin impregnated paper 25 µm

Element Δp
N 20 bar

Execution
P01 MP Filtri standard
Pxx Customized

FILTER ELEMENT

Configuration example: CU110 | 4 | A10 | A | N | P01

Element series and size
CU110

Element length
1 | **2** | **3** | **4**

Filtration rating (filter media)

A03	Inorganic microfiber 3 µm	**M25**	Wire mesh 25 µm
A06	Inorganic microfiber 6 µm	**M60**	Wire mesh 60 µm
A10	Inorganic microfiber 10 µm	**M90**	Wire mesh 90 µm
A16	Inorganic microfiber 16 µm	**P10**	Resin impregnated paper 10 µm
A25	Inorganic microfiber 25 µm	**P25**	Resin impregnated paper 25 µm

Seals

		Filtration rating Axx	Mxx	Pxx
A	NBR	•	•	•
V	FPM	•	•	•
W	NBR compatible with fluids HFA-HFB-HFC	•	•	

Element Δp
N 20 bar

Execution
P01 MP Filtri standard
Pxx Customized

ACCESSORIES

Differential indicators

		page
DEA	Electrical differential indicator	445
DEM	Electrical differential indicator	445-446
DLA	Electrical / visual differential indicator	446-447
DLE	Electrical / visual differential indicator	447
DTA	Electronic differential indicator	448
DVA	Visual differential indicator	448
DVM	Visual differential indicator	448

Additional features

		page
T2	Plug	449

LMP118 - LMP119

Filter length	H [mm]
1	182
2	215
3	265
4	365

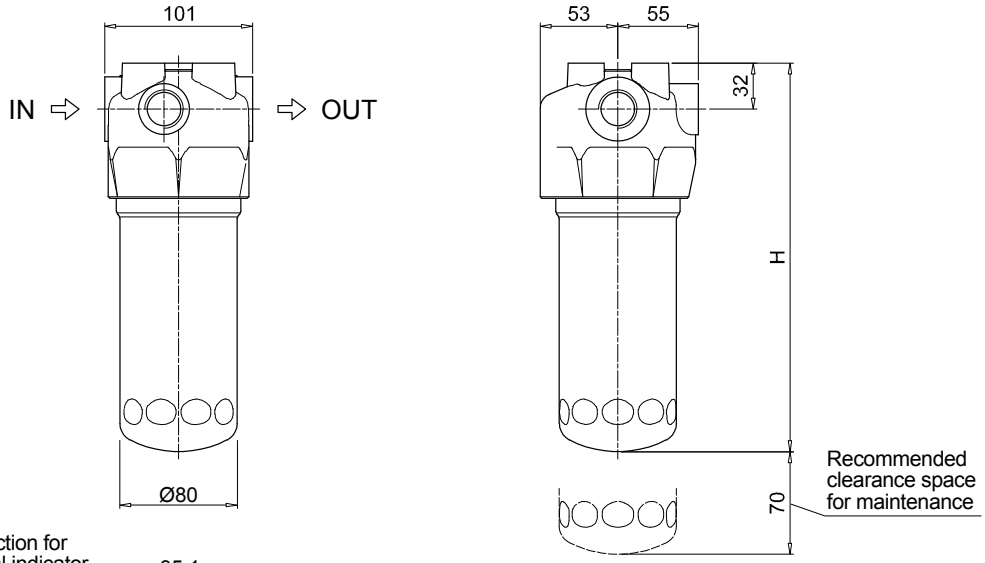

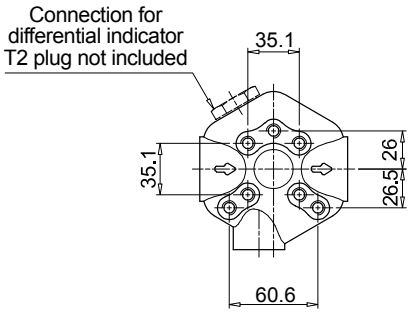

Fixing holes
Option for Metric and UNC screws

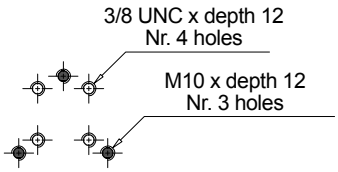

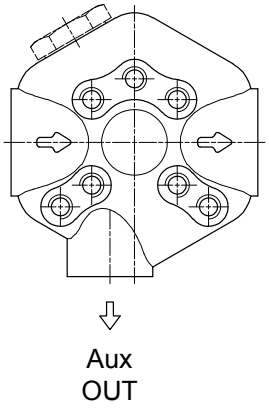

Designation & Ordering code

COMPLETE FILTER

Configuration example: LMP120 | 4 | B | A | D | 1 | A10 | N | P01

Series and size
LMP120 | **LMP122**

Length
1 | **2** | **3** | **4**

Bypass valve
S Without bypass
B 3.5 bar

Seals and treatments — Filtration rating: Axx | Mxx | Pxx
A NBR • • •
V FPM • • •
W NBR compatible with fluids HFA-HFB-HFC • •

Connections — LMP120 | LMP122
A G 3/4" •
B G 1" •
C 3/4" NPT •
D 1" NPT •
E SAE 12 - 1 1/16" - 12 UN •
F SAE 16 - 1 5/16" - 12 UN •

Connection for differential indicator
1 Without
2 With standard connection

Filtration rating (filter media)
A03 Inorganic microfiber 3 µm
A06 Inorganic microfiber 6 µm
A10 Inorganic microfiber 10 µm
A16 Inorganic microfiber 16 µm
A25 Inorganic microfiber 25 µm
M25 Wire mesh 25 µm
M60 Wire mesh 60 µm
M90 Wire mesh 90 µm
P10 Resin impregnated paper 10 µm
P25 Resin impregnated paper 25 µm

Element Δp
N 20 bar

Execution
P01 MP Filtri standard
Pxx Customized

FILTER ELEMENT

Configuration example: CU110 | 4 | A10 | A | N | P01

Element series and size
CU110

Element length
1 | **2** | **3** | **4**

Filtration rating (filter media)
A03 Inorganic microfiber 3 µm
A06 Inorganic microfiber 6 µm
A10 Inorganic microfiber 10 µm
A16 Inorganic microfiber 16 µm
A25 Inorganic microfiber 25 µm
M25 Wire mesh 25 µm
M60 Wire mesh 60 µm
M90 Wire mesh 90 µm
P10 Resin impregnated paper 10 µm
P25 Resin impregnated paper 25 µm

Seals — Filtration rating: Axx | Mxx | Pxx
A NBR • • •
V FPM • • •
W NBR compatible with fluids HFA-HFB-HFC • •

Element Δp
N 20 bar

Execution
P01 MP Filtri standard
Pxx Customized

ACCESSORIES

Differential indicators

		page
DEA	Electrical differential indicator	445
DEM	Electrical differential indicator	445-446
DLA	Electrical / visual differential indicator	446-447
DLE	Electrical / visual differential indicator	447
DTA	Electronic differential indicator	448
DVA	Visual differential indicator	448
DVM	Visual differential indicator	448

Additional features

		page
T2	Plug	449

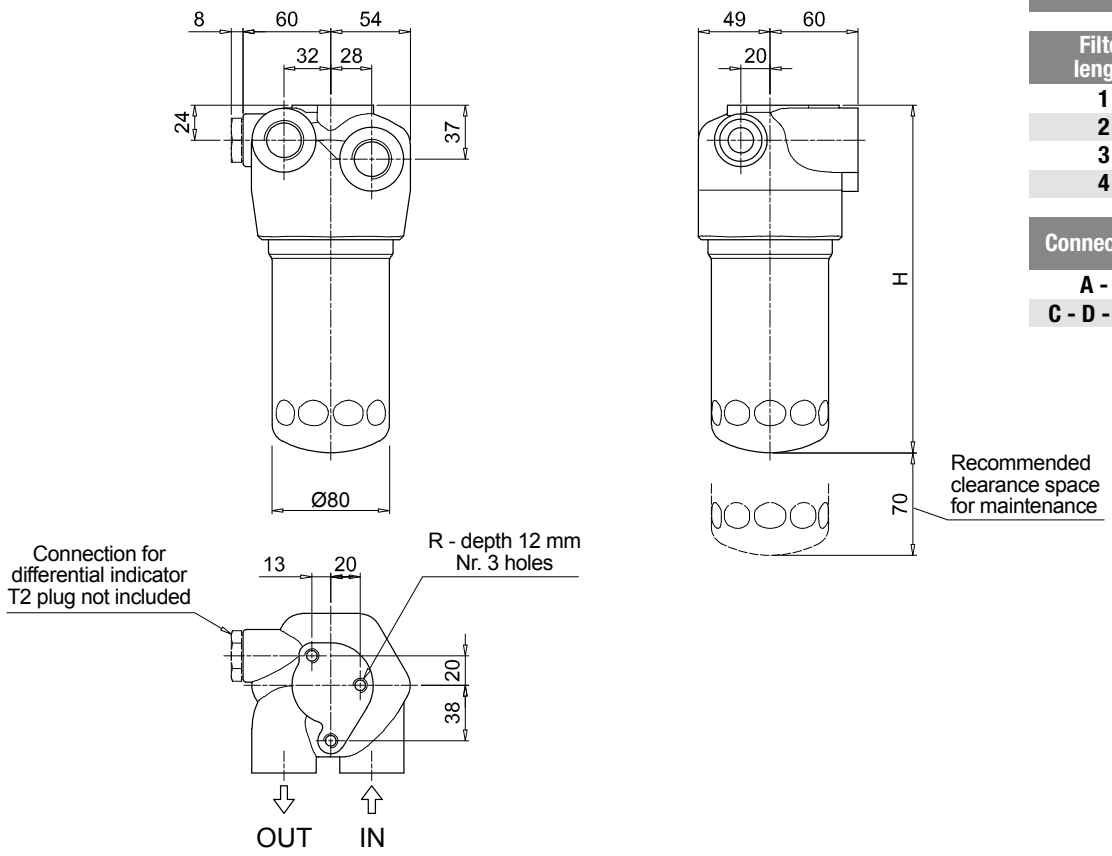

LMP120

Filter length	H [mm]
1	182
2	215
3	265
4	365

Connections	R
A - B	M10
C - D - E - F	3/8" UNC

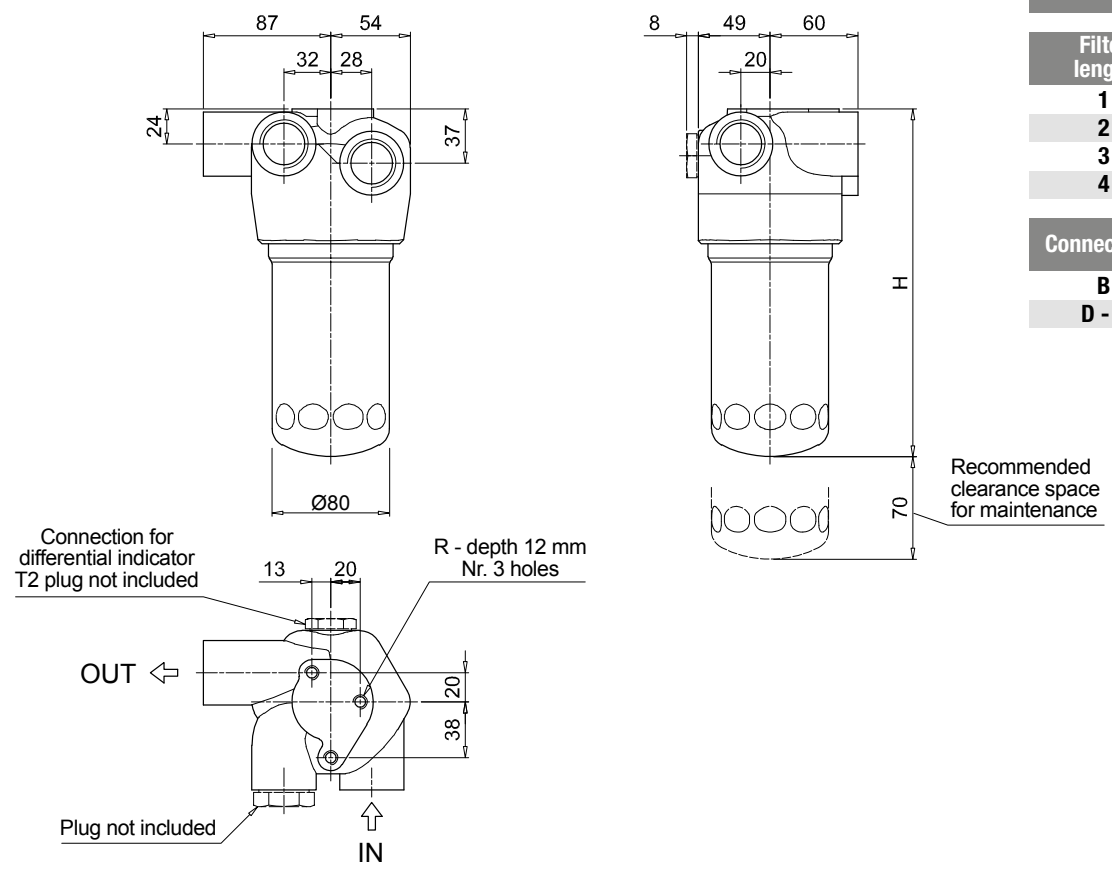

LMP122

Filter length	H [mm]
1	182
2	215
3	265
4	365

Connections	R
B	M10
D - F	3/8" UNC

Designation & Ordering code

COMPLETE FILTER

Configuration example: LMP123 | 4 | R | A | F | 1 | A10 | N | P01

Series and size

LMP123

Length

1 | **2** | **3** | **4**

Valves	Bypass	OUT to cooler	Check valve
C	without	front	2 bar
D			3 bar
G		side	2 bar
H			3 bar
M	3.5 bar	front	2 bar
N			3 bar
Q		side	2 bar
R			3 bar

Seals and treatments		Filtration rating Axx	Mxx	Pxx
A	NBR	•	•	•
V	FPM	•	•	•
W	NBR compatible with fluids HFA-HFB-HFC	•	•	

Connections

B G 1”

F SAE 16 - 1 5/16” - 12 UN

Connection for differential indicator

1 Without

2 With standard connection

Filtration rating (filter media)

A03	Inorganic microfiber 3 µm	**M25**	Wire mesh 25 µm
A06	Inorganic microfiber 6 µm	**M60**	Wire mesh 60 µm
A10	Inorganic microfiber 10 µm	**M90**	Wire mesh 90 µm
A16	Inorganic microfiber 16 µm	**P10**	Resin impregnated paper 10 µm
A25	Inorganic microfiber 25 µm	**P25**	Resin impregnated paper 25 µm

Element Δp

N 20 bar

Execution

P01 MP Filtri standard

Pxx Customized

FILTER ELEMENT

Configuration example: CU110 | 4 | A10 | A | N | P01

Element series and size

CU110

Element length

1 | **2** | **3** | **4**

Filtration rating (filter media)

A03	Inorganic microfiber 3 µm	**M25**	Wire mesh 25 µm
A06	Inorganic microfiber 6 µm	**M60**	Wire mesh 60 µm
A10	Inorganic microfiber 10 µm	**M90**	Wire mesh 90 µm
A16	Inorganic microfiber 16 µm	**P10**	Resin impregnated paper 10 µm
A25	Inorganic microfiber 25 µm	**P25**	Resin impregnated paper 25 µm

Seals		Filtration rating Axx	Mxx	Pxx
A	NBR	•	•	•
V	FPM	•	•	•
W	NBR compatible with fluids HFA-HFB-HFC	•	•	

Element Δp

N 20 bar

Execution

P01 MP Filtri standard

Pxx Customized

ACCESSORIES

Differential indicators		page
DEA	Electrical differential indicator	445
DEM	Electrical differential indicator	445-446
DLA	Electrical / visual differential indicator	446-447
DLE	Electrical / visual differential indicator	447

		page
DTA	Electronic differential indicator	448
DVA	Visual differential indicator	448
DVM	Visual differential indicator	448

Additional features		page
T2	Plug	449

Dimensions

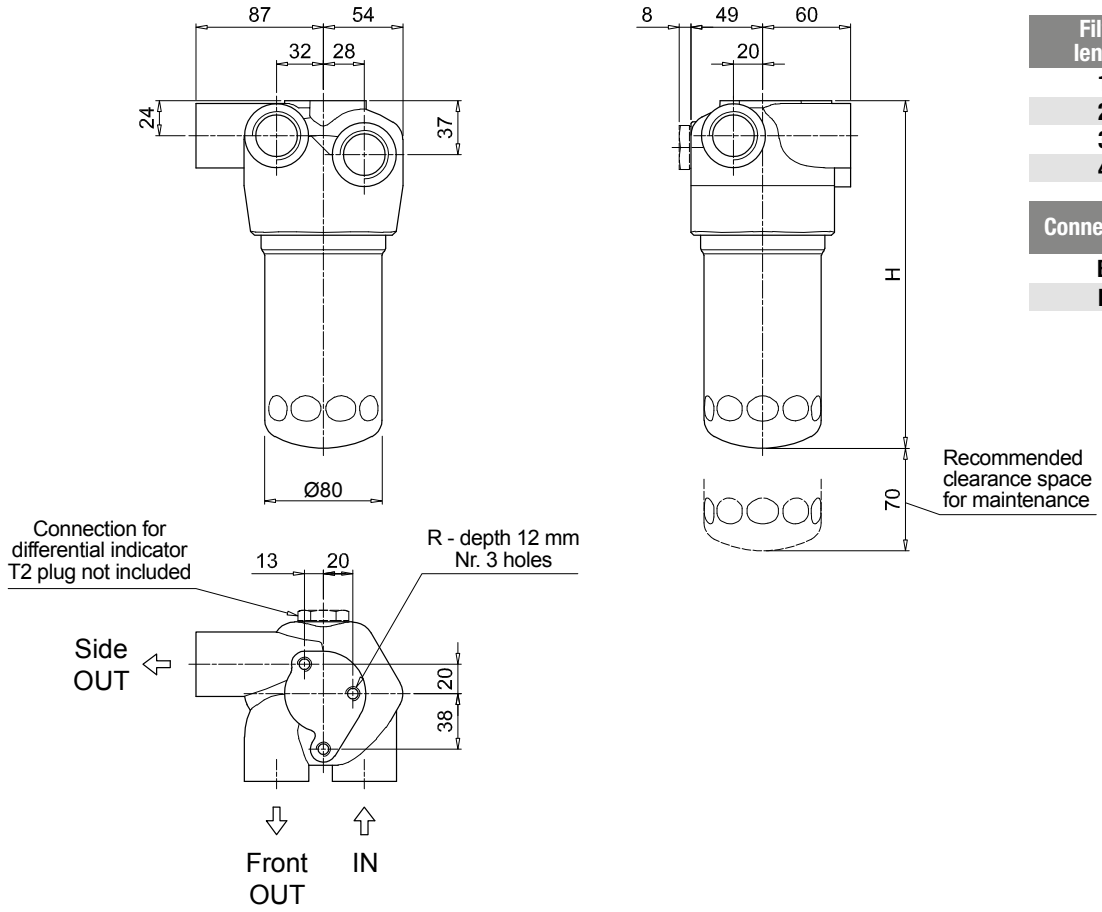

LMP123	
Filter length	**H [mm]**
1	182
2	215
3	265
4	365

Connections	**R**
B	M10
F	3/8" UNC

Order number for spare parts

LMP 110 - 112 - 116 - 118 - 119	LMP 120	LMP 122 - 123

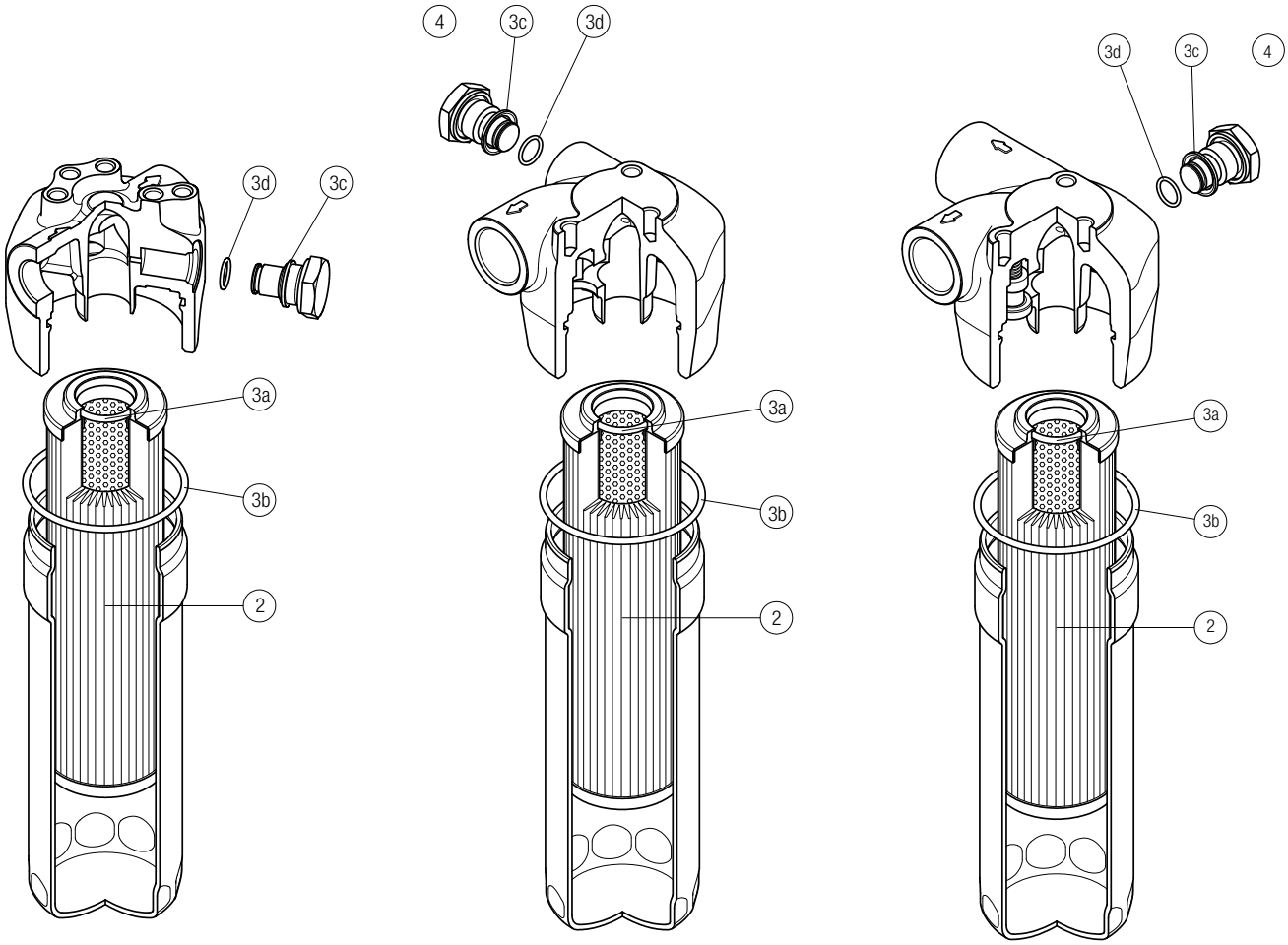

Item:	Q.ty: 1 pc. 2	Q.ty: 1 pc. 3 (3a ÷ 3d)		Q.ty: 1 pc. 4	
Filter series	Filter element	Seal Kit code number NBR	FPM	Indicator connection plug NBR	FPM
LMP 110-112-116 -118-119	See order table	02050478	02050479	T2H	T2V
LMP 120					
LMP 122-123					

LMP 210-211

Maximum working pressure up to 6 MPa (60 bar) - Flow rate up to 365 l/min



LMP 210-211 GENERAL INFORMATION

Description

Low & Medium Pressure filters

Maximum working pressure up to 6 MPa (60 bar)
Flow rate up to 365 l/min

LMP210 is a range of versatile low pressure filter for transmission, protection of sensitive components in low pressure hydraulic systems and filtration of the coolant into the machine tools.
They are also suitable for the off-line filtration of small reservoirs.
They are directly connected to the lines of the system through the hydraulic fittings.

Available features:

- Flanged connections up to 1 1/2", for a maximum flow rate of 365 l/min (LMP210)
- Female threaded connections up to 1 1/2", for a maximum return flow rate of 365 l/min (LMP211)
- Fine filtration rating, to get a good cleanliness level into the system
- Water removal elements, to remove the free water from the hydraulic fluid. For further information, see the Contamination Management document and the dedicate leaflet.
- Bypass valve, to relieve excessive pressure drop across the filter media
- Visual, electrical and electronic differential clogging indicators

Common applications:

Delivery lines, in any low pressure industrial equipment or mobile machines

Technical data

Filter housing materials

- Head: Aluminium
- Bowl: Cataphoretic Painted Steel
- Bypass valve: AISI 304 - Nylon

Pressure

- Test pressure: 9 MPa (90 bar)
- Burst pressure: 21 MPa (210 bar)
- Pulse pressure fatigue test: 1 000 000 cycles with pressure from 0 to 6 MPa (60 bar)

Bypass valve

- Opening pressure 350 kPa (3.5 bar) ±10%
- Other opening pressures on request.

Δp element type

- Microfibre filter elements - series N: 20 bar
- Fluid flow through the filter element from OUT to IN

Seals

- Standard NBR series A
- Optional FPM series V

Temperature

From -25 °C to +110 °C

Connections

Inlet/Outlet In-Line

Note

LMP 210 - 211 filters are provided for vertical mounting



Weights [kg] and volumes [dm³]

Filter series	Weights [kg]				Volumes [dm³]			
	Length	1	2	3	Length	1	2	3
LMP 210-211		3.10	4.80	6.40		1.60	2.10	2.80

FILTER ASSEMBLY SIZING
Flow rates [l/min]

		Filter element design - N Series										
Filter series	Length	A03	A06	A10	A16	A25	M25	M60	M90	M250	P10	P25
LMP 210	1	106	130	190	200	221	286	287	287	288	261	265
	2	153	175	220	237	249	288	289	290	290	265	269
	3	204	214	248	260	265	289	290	291	291	277	281
LMP 211	1	118	149	227	240	269	358	359	360	361	324	330
	2	178	207	268	292	307	361	362	363	364	329	335
	3	247	260	306	323	329	362	363	364	365	345	351

Maximum flow rate for a complete low and medium pressure filter with a pressure drop Δp = 0.7 bar.
The reference fluid has a kinematic viscosity of 30 mm^2/s (cSt) and a density of 0.86 kg/dm^3.
For different pressure drop or fluid viscosity we recommend to use our selection software available on www.mpfiltri.com.
You can also calculate the right size using the formulas present on the FILTER SIZING paragraph at the beginning of the full catalogue or at the beginning of the filter family brochure.
Please, contact our Sales Department for further additional information.

Hydraulic symbols

Filter series	Execution S	Execution B
LMP 210-211	•	•

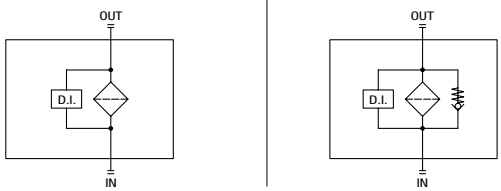

Pressure drop

Filter housings
Δp pressure drop

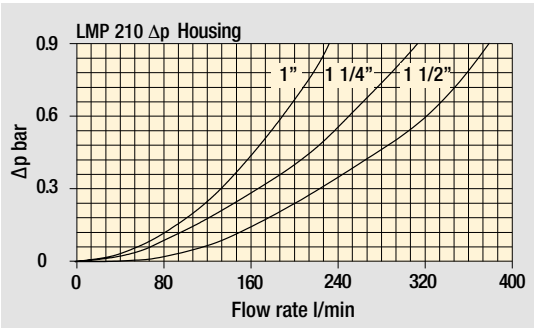

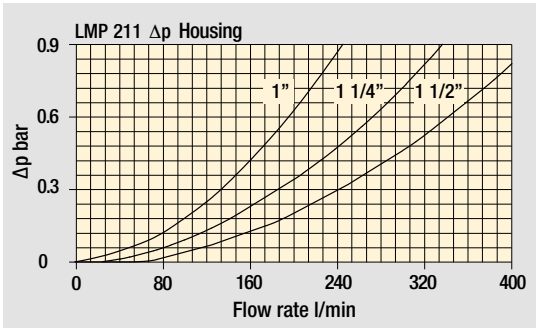

Bypass valve
pressure drop

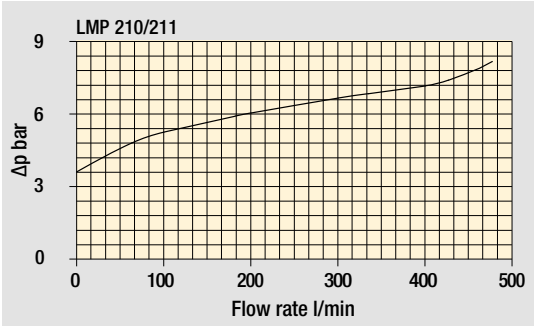

The curves are plotted using mineral oil with density of 0.86 kg/dm^3 in compliance with ISO 3968. Δp varies proportionally with density.

LMP 210

Designation & Ordering code

COMPLETE FILTER

Configuration example: LMP210 | 3 | B | A | F1 | A10 | N | P01

Series and size

LMP210

Length

1 | **2** | **3**

Bypass valve

S Without bypass

B 3.5 bar

Seals and treatments		Filtration rating Axx	Mxx	Pxx
A	NBR	•	•	•
V	FPM	•	•	•
W	NBR compatible with fluids HFA-HFB-HFC	•	•	

Connections

F1 1" SAE 3000 psi/M
F2 1 1/4" SAE 3000 psi/M
F3 1 1/2" SAE 3000 psi/M
F4 1" SAE 3000 psi/UNC
F5 1 1/4" SAE 3000 psi/UNC
F6 1 1/2" SAE 3000 psi/UNC

Filtration rating (filter media)

A03 Inorganic microfiber 3 µm
A06 Inorganic microfiber 6 µm
A10 Inorganic microfiber 10 µm
A16 Inorganic microfiber 16 µm
A25 Inorganic microfiber 25 µm
M25 Wire mesh 25 µm
M60 Wire mesh 60 µm
M90 Wire mesh 90 µm
P10 Resin impregnated paper 10 µm
P25 Resin impregnated paper 25 µm

WA025 Water absorber inorganic microfiber 25 µm

Element Δp

N 20 bar

Execution

P01 MP Filtri standard
Pxx Customized

FILTER ELEMENT

Configuration example: CU210 | 3 | A10 | A | N | P01

Element series and size

CU210

Element length

1 | **2** | **3**

Filtration rating (filter media)

A03 Inorganic microfiber 3 µm
A06 Inorganic microfiber 6 µm
A10 Inorganic microfiber 10 µm
A16 Inorganic microfiber 16 µm
A25 Inorganic microfiber 25 µm
M25 Wire mesh 25 µm
M60 Wire mesh 60 µm
M90 Wire mesh 90 µm
P10 Resin impregnated paper 10 µm
P25 Resin impregnated paper 25 µm

WA025 Water absorber inorganic microfiber 25 µm

Seals		Filtration rating Axx	Mxx	Pxx
A	NBR	•	•	•
V	FPM	•	•	•
W	NBR compatible with fluids HFA-HFB-HFC	•	•	

Element Δp

N 20 bar

Execution

P01 MP Filtri standard
Pxx Customized

ACCESSORIES

Differential indicators		page
DEA	Electrical differential indicator	445
DEM	Electrical differential indicator	445-446
DLA	Electrical / visual differential indicator	446-447
DLE	Electrical / visual differential indicator	447

		page
DTA	Electronic differential indicator	448
DVA	Visual differential indicator	448
DVM	Visual differential indicator	448

Additional features		page
T2	Plug	449

Dimensions

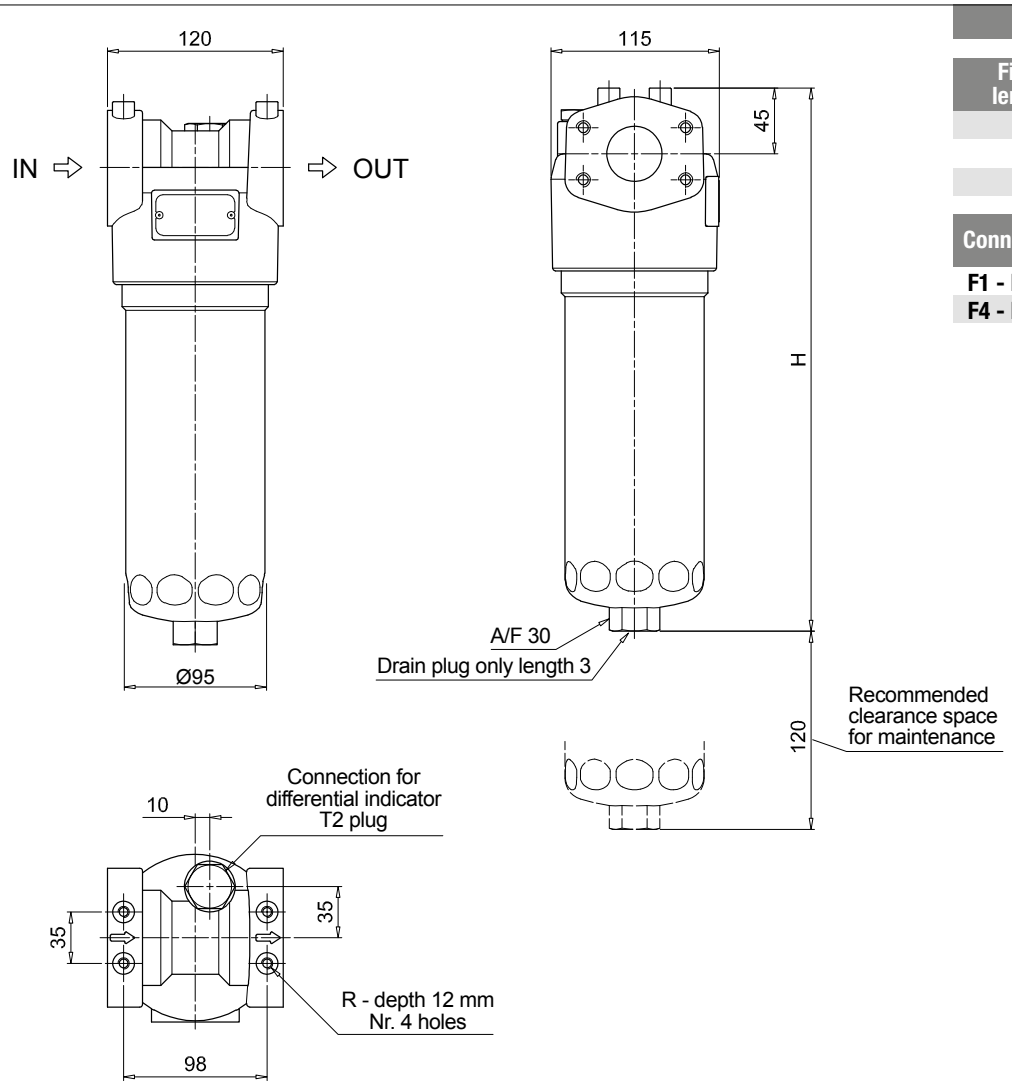

LMP210

Filter length	H [mm]
1	362
2	492
3	633

Connections	R
F1 - F2 - F3	M8
F4 - F5 - F6	5/16" UNC

LMP 211

Designation & Ordering code

COMPLETE FILTER

Configuration example: LMP211 | 3 | B | A | D | 6 | A10 | N | P01

Series and size
LMP211

Length
1 | **2** | **3**

Bypass valve
S Without bypass
B 3.5 bar

Seals and treatments		Filtration rating Axx	Mxx	Pxx
A	NBR	•	•	•
V	FPM	•	•	•
W	NBR compatible with fluids HFA-HFB-HFC	•	•	

Connections
A G 1”
B G 1 1/4”
C G 1 1/2”
D 1” NPT
E 1 1/4” NPT
F 1 1/2” NPT
G SAE 16 - 1 5/16” - 12 UN
H SAE 20 - 1 5/8” - 12 UN
I SAE 24 - 1 7/8” - 12 UN

Connection for differential indicator
6 With plugged connection

Filtration rating (filter media)

A03	Inorganic microfiber 3 µm	**M25**	Wire mesh 25 µm
A06	Inorganic microfiber 6 µm	**M60**	Wire mesh 60 µm
A10	Inorganic microfiber 10 µm	**M90**	Wire mesh 90 µm
A16	Inorganic microfiber 16 µm	**P10**	Resin impregnated paper 10 µm
A25	Inorganic microfiber 25 µm	**P25**	Resin impregnated paper 25 µm

WA025 Water absorber inorganic microfiber 25 µm

Element Δp
N 20 bar

Execution
P01 MP Filtri standard
Pxx Customized

FILTER ELEMENT

Configuration example: CU210 | 3 | A10 | A | N | P01

Element series and size
CU210

Element length
1 | **2** | **3** |

Filtration rating (filter media)

A03	Inorganic microfiber 3 µm	**M25**	Wire mesh 25 µm
A06	Inorganic microfiber 6 µm	**M60**	Wire mesh 60 µm
A10	Inorganic microfiber 10 µm	**M90**	Wire mesh 90 µm
A16	Inorganic microfiber 16 µm	**P10**	Resin impregnated paper 10 µm
A25	Inorganic microfiber 25 µm	**P25**	Resin impregnated paper 25 µm

WA025 Water absorber inorganic microfiber 25 µm

Seals		Filtration rating Axx	Mxx	Pxx
A	NBR	•	•	•
V	FPM	•	•	•
W	NBR compatible with fluids HFA-HFB-HFC	•	•	

Element Δp
N 20 bar

Execution
P01 MP Filtri standard
Pxx Customized

ACCESSORIES

Differential indicators		page
DEA	Electrical differential indicator	445
DEM	Electrical differential indicator	445-446
DLA	Electrical / visual differential indicator	446-447
DLE	Electrical / visual differential indicator	447

		page
DTA	Electronic differential indicator	448
DVA	Visual differential indicator	448
DVM	Visual differential indicator	448

Additional features		page
T2	Plug	449

Dimensions

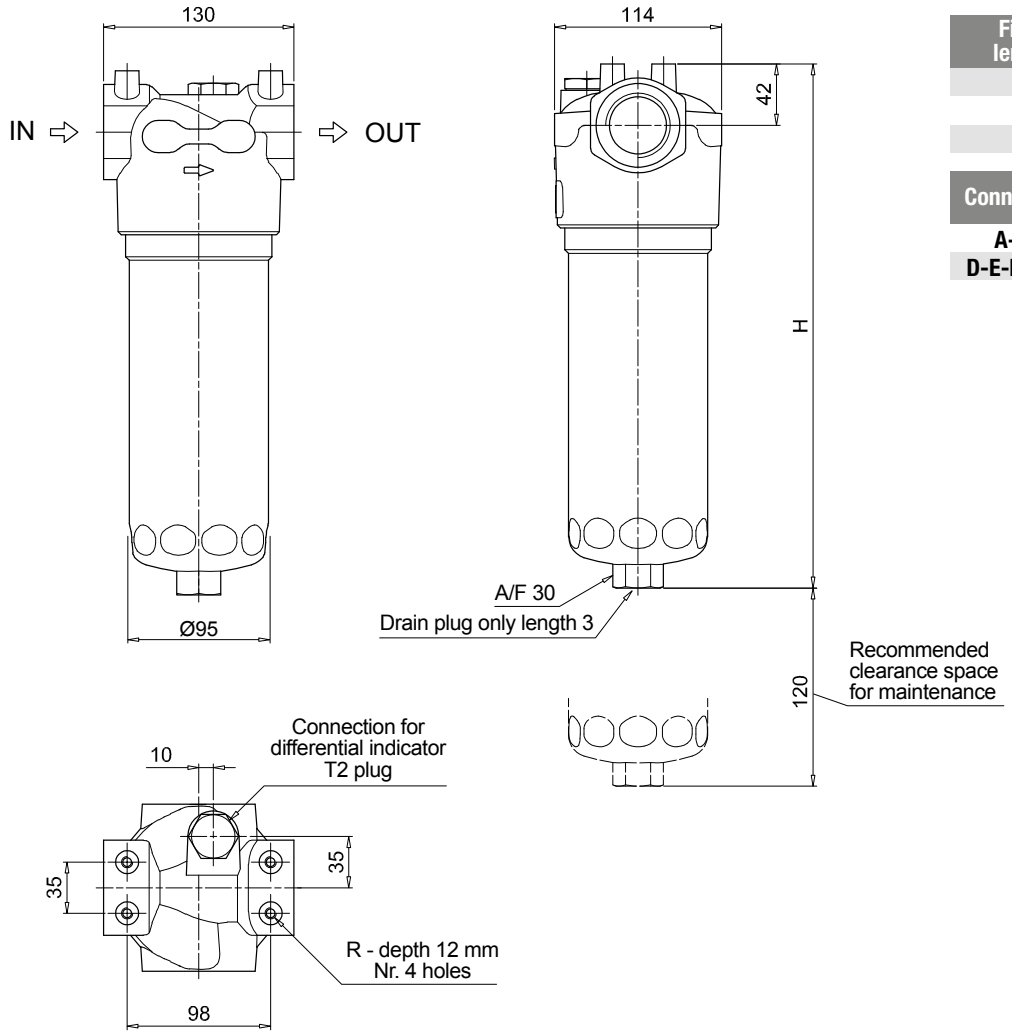

LMP211	
Filter length	**H [mm]**
1	358
2	488
3	629

Connections	**R**
A-B-C	M8
D-E-F-G-H-I	5/16" UNC

LMP 210-211 SPARE PARTS

Order number for spare parts

LMP 210

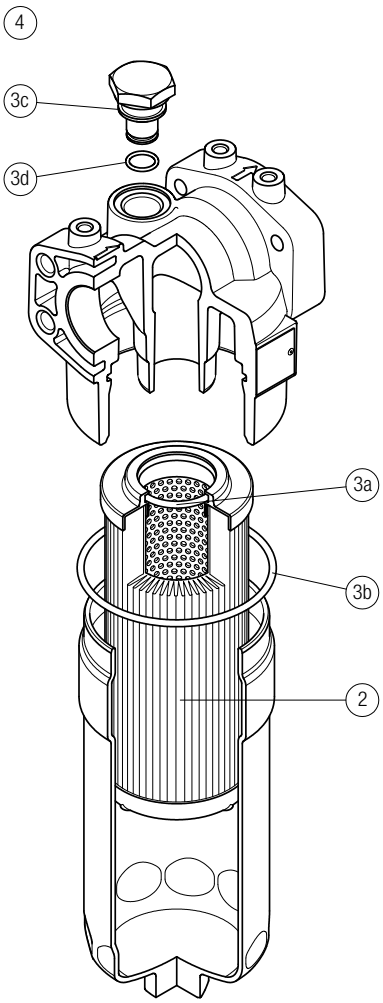

LMP 211

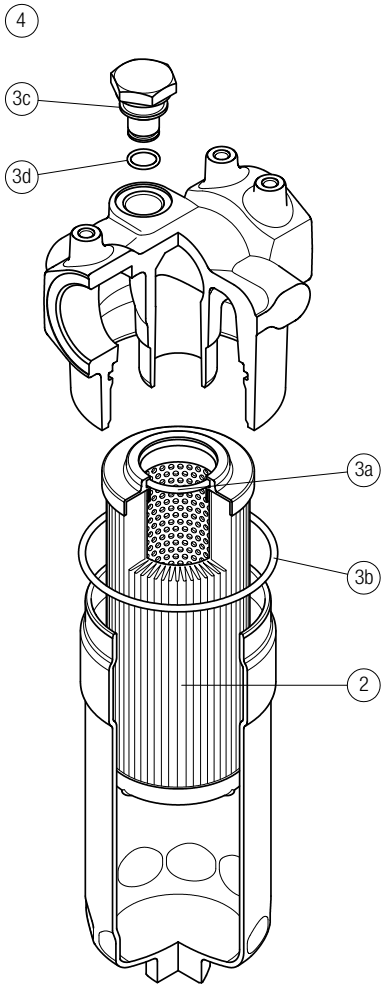

Item:	Q.ty: 1 pc. 2	Q.ty: 1 pc. 3 (3a ÷ 3d)		Q.ty: 1 pc. 4	
Filter series	Filter element	Seal Kit code number NBR	FPM	Indicator connection plug NBR	FPM
LMP 210-211	See order table	02050435	02050436	T2H	T2V

LMP 400-401 & 430-431 series

Maximum working pressure up to 6 MPa (60 bar) - Flow rate up to 780 l/min



Description

Low & Medium Pressure filters

Maximum working pressure up to 6 MPa (60 bar)
Flow rate up to 780 l/min

LMP400 is a range of low pressure filter with large filtration surface mainly suitable for lubrication, off-line filtration of the reservoirs and filtration equipment.
They are directly connected to the lines of the system through the hydraulic fittings.

Available features:
- Female threaded connections up to 2" and flanged connections up to 2 1/2", for a maximum flow rate of 780 l/min
- In line or 90° connections, to meet any type of application
- Base-mounting design also available, for ease of the replacement of the filter element
- Fine filtration rating, to get a good cleanliness level into the system
- Water removal elements, to remove the free water from the hydraulic fluid. For further information, see the Contamination Management document and the dedicate leaflet.
- Bypass valve, to relieve excessive pressure drop across the filter media
- Vent ports, to avoid air trapped into the filter going into the system
- Drain ports, to remove the fluid from the housing prior the maintenance work
- Visual, electrical and electronic differential clogging indicators

Common applications:
- Off-line filtration of reservoirs
- Filtration systems

Technical data

Filter housing materials
- Head: Anodized Aluminium
- Housing: Anodized Aluminium
- Bypass valve: Steel

Pressure LMP 400 length 2 -3 - 4
- Working pressure: 6 MPa (60 bar)
- Test pressure: 9 MPa (90 bar)
- Burst pressure: 21 MPa (210 bar)
- Pulse pressure fatigue test: 1 000 000 cycles with pressure from 0 to 6 MPa (60 bar)

Pressure LMP 400 length 5 - 6
- Working pressure: 5 MPa (50 bar)
- Test pressure: 7.5 MPa (75 bar)
- Burst pressure: 15 MPa (150 bar)
- Pulse pressure fatigue test: 1 000 000 cycles with pressure from 0 to 5 MPa (50 bar)

Bypass valve
- Opening pressure 350 kPa (3.5 bar) ±10%
- Other opening pressures on request.

Δp element type
- Microfibre filter elements - series N - W: 20 bar
- Fluid flow through the filter element from OUT to IN

Seals
- Standard NBR series A
- Optional FPM series V

Temperature
From -25 °C to +110 °C

Connections
LMP 400 - 430: In-line Inlet/Outlet
LMP 401 - 431: 90° Inlet/Outlet

Note
LMP 400 filters
are provided
for vertical mounting



Weights [kg] and volumes [dm³]

Filter series	Weights [kg]						Volumes [dm³]					
	Length	2	3	4	5	6	Length	2	3	4	5	6
LMP 400-401 & 430-431		7.20	8.10	8.80	11.90	14.40		3.50	5.00	6.50	9.50	13.50

FILTER ASSEMBLY SIZING
Flow rates [l/min]

Filter series	Length	Filter element design - N Series							
		A03	A06	A10	A16	A25	M25 M60 M90 M250	P10	P25
LMP 400	2	205	244	370	411	515	720	524	556
	3	280	333	474	515	602	760	637	660
	4	347	400	535	564	637	769	660	688
	5	459	501	610	660	717	781	700	721
	6	504	575	676	689	728	783	708	727
LMP 401	2	200	236	347	382	468	628	475	501
	3	268	315	434	468	537	659	565	582
	4	328	373	484	507	565	665	582	603
	5	423	456	544	582	626	674	613	629
	6	459	516	594	604	634	676	619	633
LMP 430	5	459	501	610	660	717	781	700	721
	6	504	575	676	689	728	783	708	727
LMP 431	5	423	456	544	582	626	674	613	629
	6	459	516	594	604	634	676	619	633

Maximum flow rate for a complete low and medium pressure filter with a pressure drop Δp = 0.7 bar.
The reference fluid has a kinematic viscosity of 30 mm^2/s (cSt) and a density of 0.86 kg/dm^3.
For different pressure drop or fluid viscosity we recommend to use our selection software available on www.mpfiltri.com.
You can also calculate the right size using the formulas present on the FILTER SIZING paragraph at the beginning of the full catalogue or at the beginning of the filter family brochure.
Please, contact our Sales Department for further additional information.

LMP 430-431: execution P02

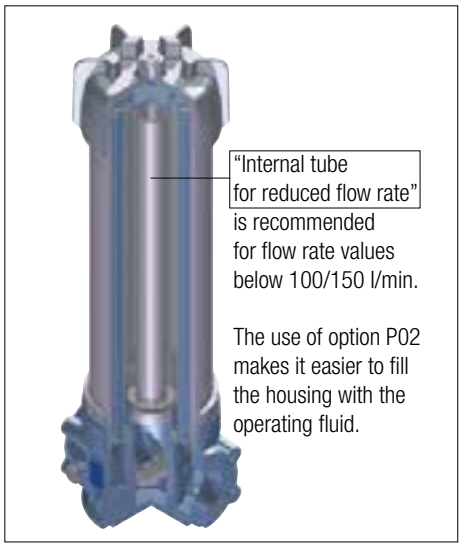

Hydraulic symbols

Filter series	Execution S	Execution B
LMP 400-401 & 430-431	•	•

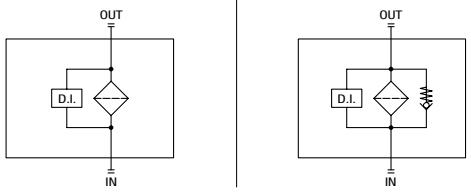

Pressure drop

Filter housings Δp pressure drop

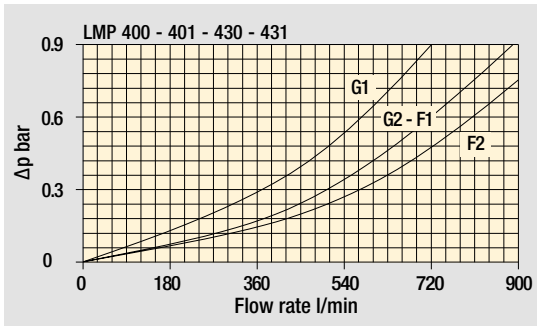

Bypass valve pressure drop

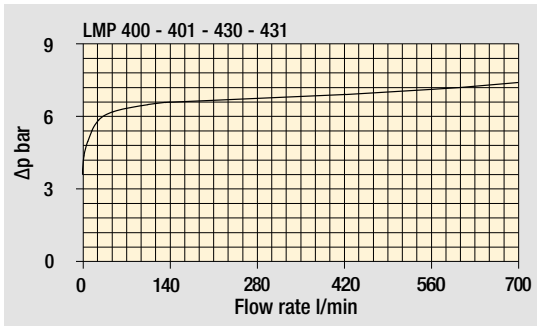

The curves are plotted using mineral oil with density of 0.86 kg/dm^3 in compliance with ISO 3968. Δp varies proportionally with density.

LMP 400-401

Designation & Ordering code

COMPLETE FILTER

Configuration example: LMP401 | 3 | B | A | G1 | A10 | N | P01

Series and size

LMP400 | **LMP401**

Length

2 | **3** | **4** | **5** | **6**

Bypass valve

S Without bypass

B 3.5 bar

Seals and treatments		Filtration rating Axx	Mxx	Pxx
A	NBR	•	•	•
V	FPM	•	•	•
W	NBR compatible with fluids HFA-HFB-HFC	•	•	

Connections

G1	G 1 1/2”	**F1**	2” SAE 3000 psi/M
G2	G 2”	**F2**	2 1/2” SAE 3000 psi/M
G3	1 1/2” NPT	**F3**	2” SAE 3000 psi/UNC
G4	2” NPT	**F4**	2 1/2” SAE 3000 psi/UNC
G5	SAE 24 - 1 7/8” - 12 UN		
G6	SAE 32 - 2 1/2” - 12 UN		

Filtration rating (filter media)

A03	Inorganic microfiber 3 µm	**M25**	Wire mesh 25 µm
A06	Inorganic microfiber 6 µm	**M60**	Wire mesh 60 µm
A10	Inorganic microfiber 10 µm	**M90**	Wire mesh 90 µm
A16	Inorganic microfiber 16 µm	**P10**	Resin impregnated paper 10 µm
A25	Inorganic microfiber 25 µm	**P25**	Resin impregnated paper 25 µm

WA025 Water absorber inorganic microfiber 25 µm

Element Δp

N 20 bar

Execution		Filter length 2	3	4	5	6
P01	MP Filtri standard	•	•	•	•	•
P02	Maintenance from the bottom of the housing				•	•
Pxx	Customized					

FILTER ELEMENT

Configuration example: CU400 | 3 | A10 | A | N | P01

Element series and size

CU400

Element length

2 | **3** | **4** | **5** | **6**

Filtration rating (filter media)

A03	Inorganic microfiber 3 µm	**M25**	Wire mesh 25 µm
A06	Inorganic microfiber 6 µm	**M60**	Wire mesh 60 µm
A10	Inorganic microfiber 10 µm	**M90**	Wire mesh 90 µm
A16	Inorganic microfiber 16 µm	**P10**	Resin impregnated paper 10 µm
A25	Inorganic microfiber 25 µm	**P25**	Resin impregnated paper 25 µm

WA025 Water absorber inorganic microfiber 25 µm

Seals		Filtration rating Axx	Mxx	Pxx
A	NBR	•	•	•
V	FPM	•	•	•
W	NBR compatible with fluids HFA-HFB-HFC	•	•	

Element Δp

N 20 bar

Execution

P01 MP Filtri standard

Pxx Customized

ACCESSORIES

Differential indicators		page
DEA	Electrical differential indicator	445
DEM	Electrical differential indicator	445-446
DLA	Electrical / visual differential indicator	446-447
DLE	Electrical / visual differential indicator	447

		page
DTA	Electronic differential indicator	448
DVA	Visual differential indicator	448
DVM	Visual differential indicator	448

Additional features		page
T2	Plug	449

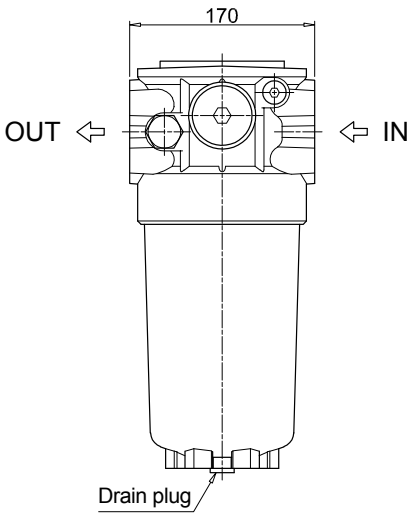

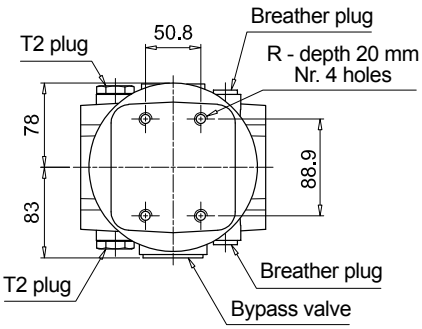

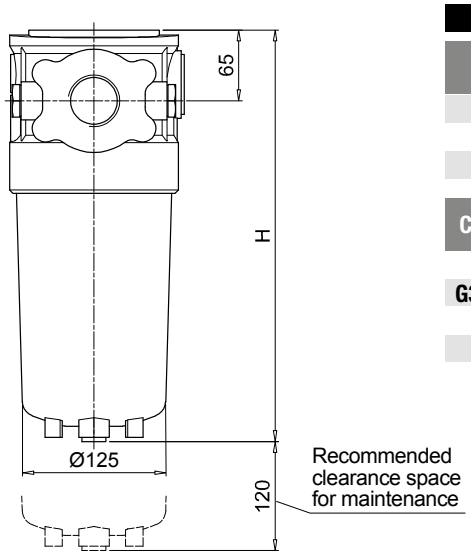

T2 plug =
connection for differential indicator

LMP400

Length 2 - 3 - 4

Filter length	H [mm]
2	378
3	478
4	578

Connections	R
G1-G2	M12
G3-G4-G5-G6	1/2" UNC
F1-F2	M12
F3-F4	1/2" UNC

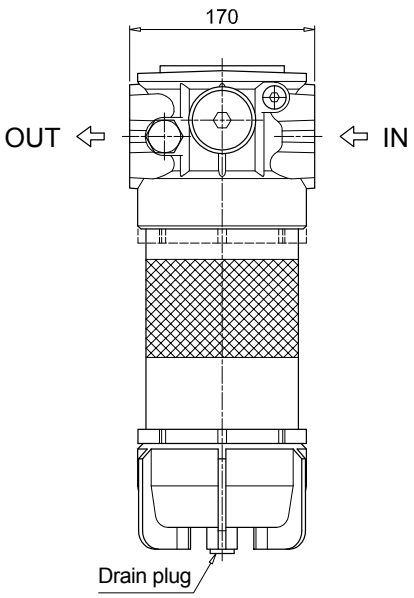

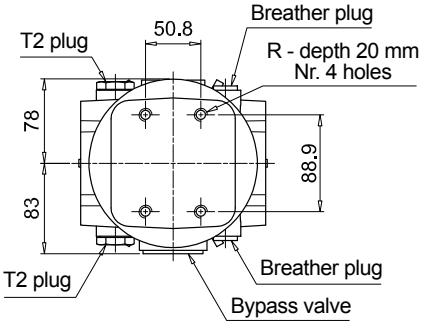

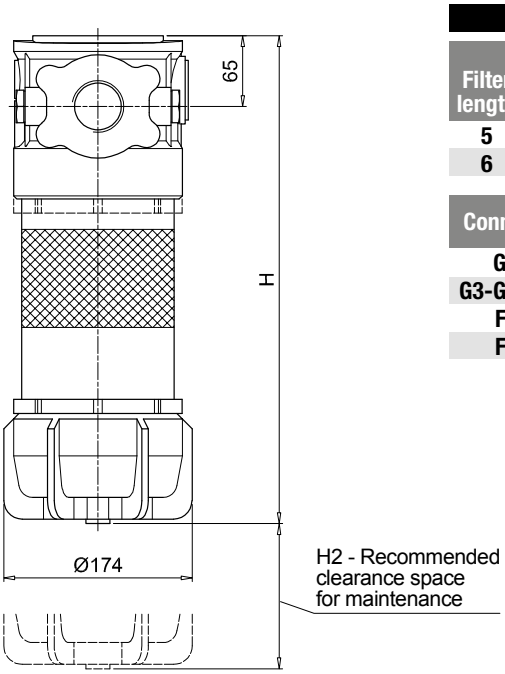

T2 plug =
connection for differential indicator

LMP400

Length 5 - 6

Filter length	H [mm]	H2 [mm] Execution P01	H2 [mm] Execution P02
5	828	120	660
6	1158	120	690

Connections	R
G1-G2	M12
G3-G4-G5-G6	1/2" UNC
F1-F2	M12
F3-F4	1/2" UNC

LMP 400-401

Dimensions

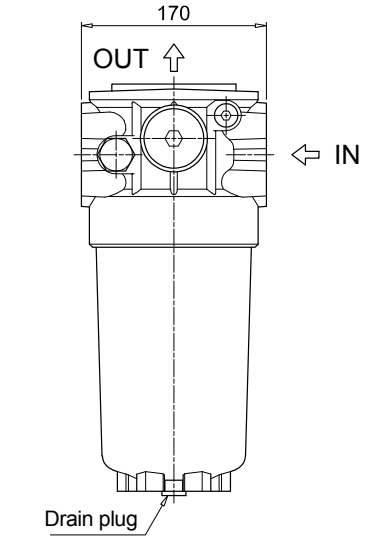

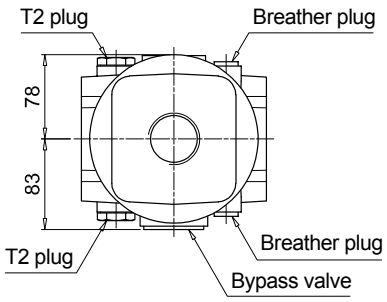

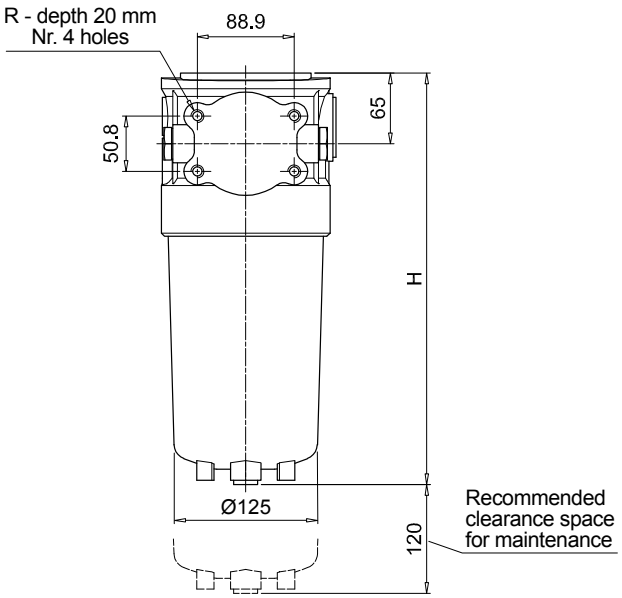

T2 plug =
connection for differential indicator

LMP401

Length 2 - 3 - 4

Filter length	H [mm]
2	378
3	478
4	578

Connections	R
G1-G2	M12
G3-G4-G5-G6	1/2" UNC
F1-F2	M12
F3-F4	1/2" UNC

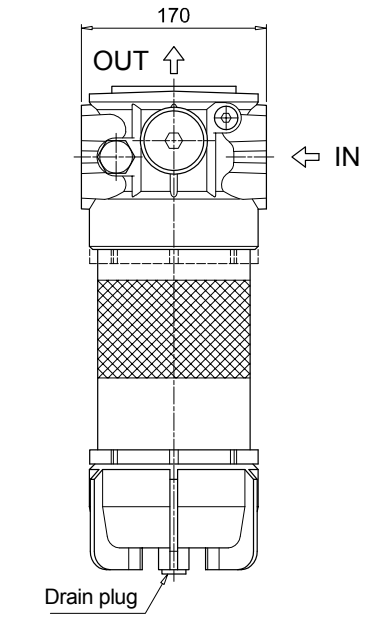

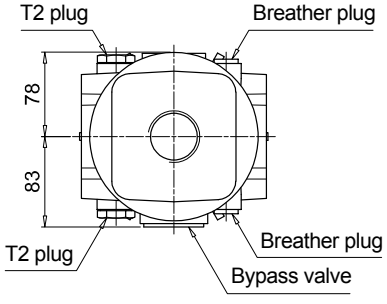

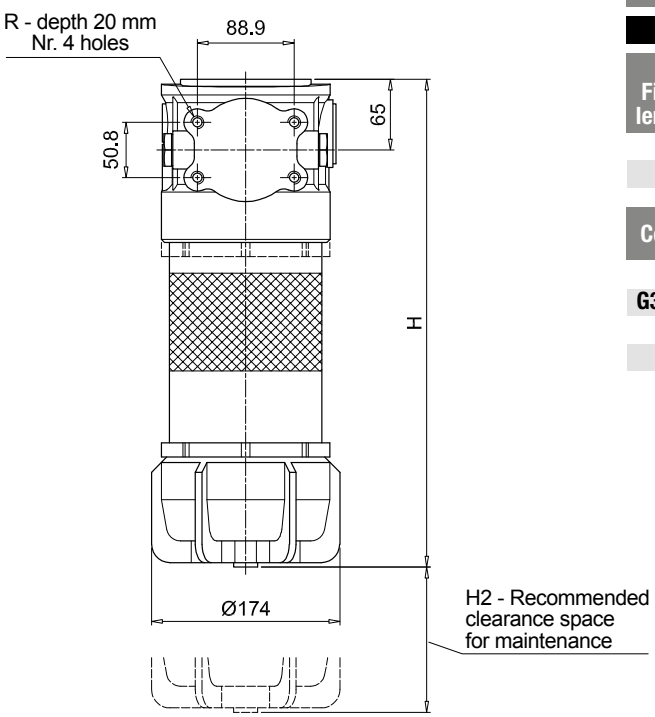

T2 plug =
connection for differential indicator

LMP401

Length 5 - 6

Filter length	H [mm]	H2 [mm] Execution P01	H2 [mm] Execution P02
5	828	120	660
6	1158	120	690

Connections	R
G1-G2	M12
G3-G4-G5-G6	1/2" UNC
F1-F2	M12
F3-F4	1/2" UNC

LMP 430-431

Designation & Ordering code

COMPLETE FILTER

Configuration example: LMP431 | 5 | B | A | G1 | A10 | N | P01

Series and size

LMP430 | **LMP431**

Length

5 | **6**

Bypass valve

S	Without bypass	**B**	3.5 bar

Seals and treatments		Filtration rating Axx	Mxx	Pxx
A	NBR	•	•	•
V	FPM	•	•	•
W	NBR compatible with fluids HFA-HFB-HFC	•	•	

Connections

G1	G 1 1/2”	**F1**	2” SAE 3000 psi/M
G2	G 2”	**F2**	2 1/2” SAE 3000 psi/M
G3	1 1/2” NPT	**F3**	2” SAE 3000 psi/UNC
G4	2” NPT	**F4**	2 1/2” SAE 3000 psi/UNC
G5	SAE 24 - 1 7/8” - 12 UN		
G6	SAE 32 - 2 1/2” - 12 UN		

Filtration rating (filter media)

A03	Inorganic microfiber 3 µm	**M25**	Wire mesh 25 µm
A06	Inorganic microfiber 6 µm	**M60**	Wire mesh 60 µm
A10	Inorganic microfiber 10 µm	**M90**	Wire mesh 90 µm
A16	Inorganic microfiber 16 µm	**P10**	Resin impregnated paper 10 µm
A25	Inorganic microfiber 25 µm	**P25**	Resin impregnated paper 25 µm

WA025 Water absorber inorganic microfiber 25 µm

Element Δp

N 20 bar

Execution

P01	MP Filtri standard
P02	With internal tube for reduced flow rate
Pxx	Customized

FILTER ELEMENT

Configuration example: CU400 | 5 | A10 | A | N | P01

Element series and size

CU400

Element length

5 | **6**

Filtration rating (filter media)

A03	Inorganic microfiber 3 µm	**M25**	Wire mesh 25 µm
A06	Inorganic microfiber 6 µm	**M60**	Wire mesh 60 µm
A10	Inorganic microfiber 10 µm	**M90**	Wire mesh 90 µm
A16	Inorganic microfiber 16 µm	**P10**	Resin impregnated paper 10 µm
A25	Inorganic microfiber 25 µm	**P25**	Resin impregnated paper 25 µm

WA025 Water absorber inorganic microfiber 25 µm

Seals		Filtration rating Axx	Mxx	Pxx
A	NBR	•	•	•
V	FPM	•	•	•
W	NBR compatible with fluids HFA-HFB-HFC	•	•	

Element Δp

N 20 bar

Execution

P01	MP Filtri standard
Pxx	Customized

ACCESSORIES

Differential indicators		page
DEA	Electrical differential indicator	445
DEM	Electrical differential indicator	445-446
DLA	Electrical / visual differential indicator	446-447
DLE	Electrical / visual differential indicator	447

		page
DTA	Electronic differential indicator	448
DVA	Visual differential indicator	448
DVM	Visual differential indicator	448

Additional features		page
T2	Plug	449

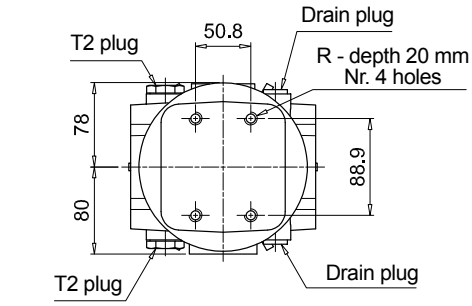

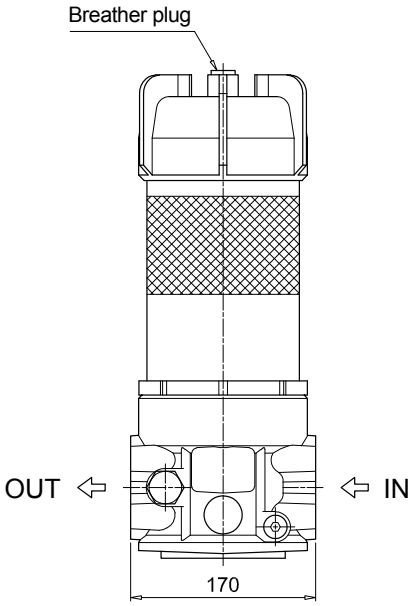

T2 plug =
connection for differential indicator

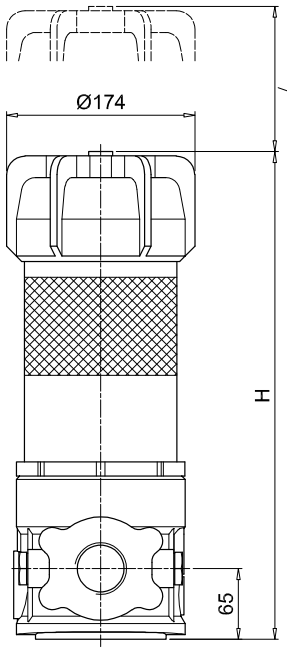

LMP430

Filter length	H [mm]	H2 [mm]
5	828	660
6	1158	690

Connections	R
G1-G2	M12
G3-G4-G5-G6	1/2" UNC
F1-F2	M12
F3-F4	1/2" UNC

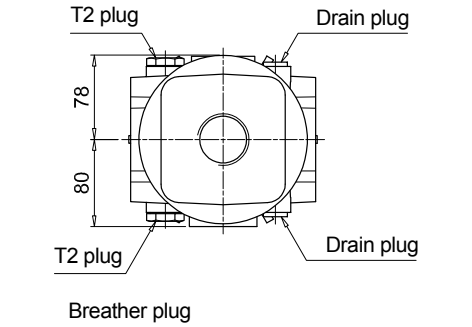

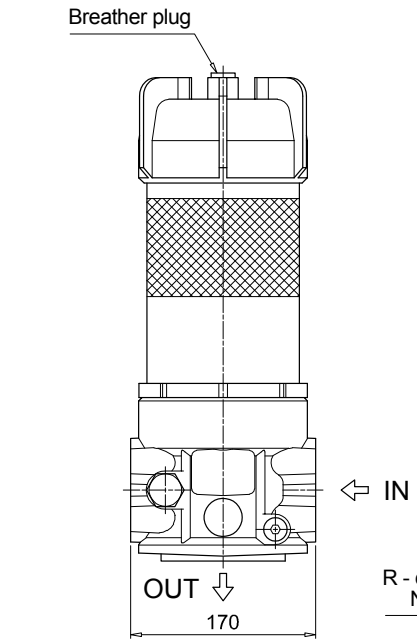

T2 plug =
connection for differential indicator

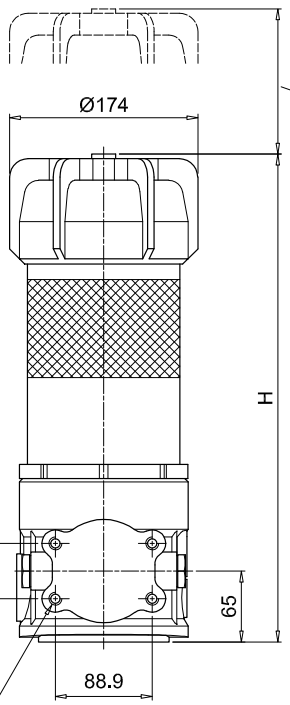

LMP431

Filter length	H [mm]	H2 [mm]
5	828	660
6	1158	690

Connections	R
G1-G2	M12
G3-G4-G5-G6	1/2" UNC
F1-F2	M12
F3-F4	1/2" UNC

Order number for spare parts

LMP 400 - 401
length 2 - 3 - 4

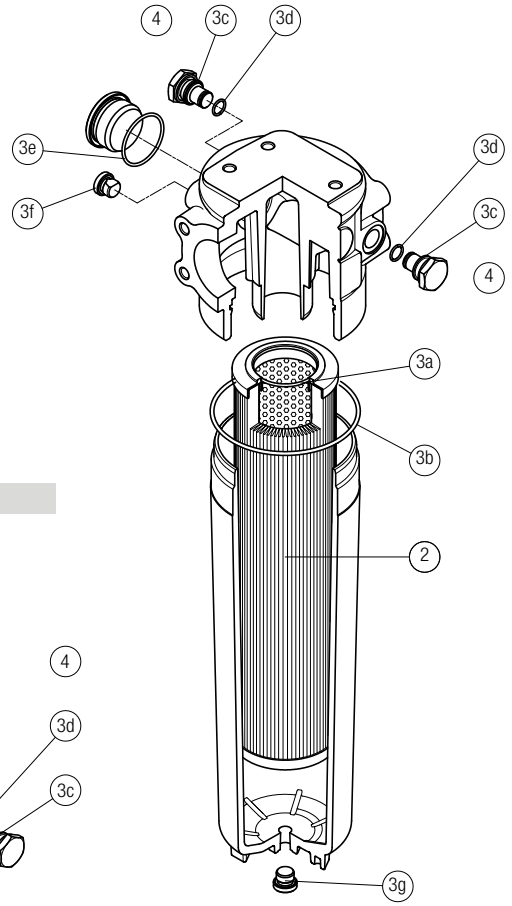

LMP 400 - 401
length 5 - 6

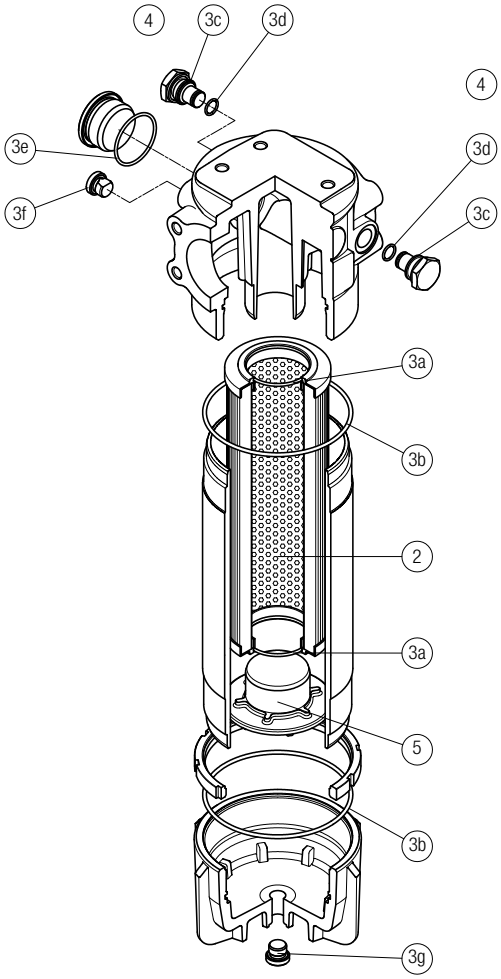

LMP 430 - 431
length 5 - 6

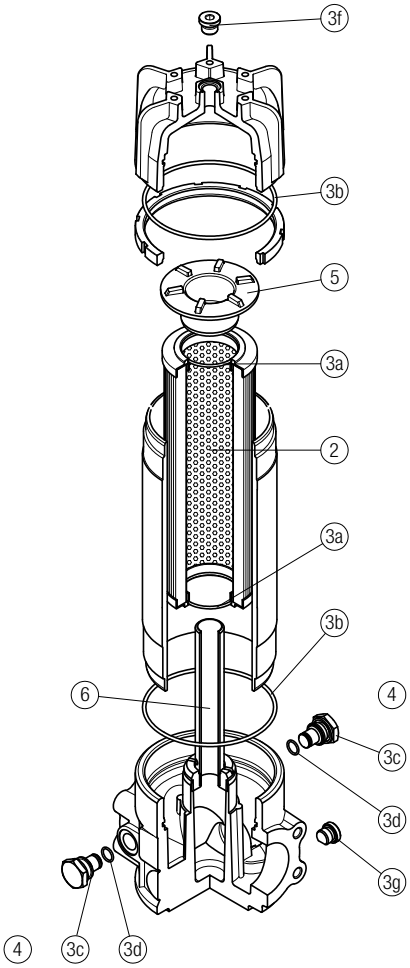

Item:	Q.ty: 1 pc. 2	Q.ty: 1 pc. 3 (3a ÷ 3g)		Q.ty: 2 pcs. 4		Q.ty: 2 pcs. 5		Q.ty: 1 pc. 6	
Filter series	**Filter element**	**Seal Kit code number NBR**	**FPM**	**Indicator connection plug NBR**	**FPM**	**Housing spigot no bypass**	**with bypass**	**Tube assembly**	
LMP 400-401 length 2-3-4	See order table	02050391	02050392	T2H	T2V				
LMP 400-401 length 5-6		02050393	02050394			01044108			
LMP 430-431 length 5-6		02050393	02050394			01044108	02001414	Length 5: 02025041	Length 6: 02025042

LMP 950-951 series

Maximum working pressure up to 3 MPa (30 bar) - Flow rate up to 2400 l/min



LMP 950-951 GENERAL INFORMATION

Description

Low & Medium Pressure filters

Maximum working pressure up to 3 MPa (30 bar)
Flow rate up to 2400 l/min

LMP950 is a range of low pressure filter with large filtration surface mainly suitable for lubrication, off-line filtration of the reservoirs and filtration equipment.
They are directly connected to the lines of the system through the hydraulic fittings.

Available features:

- Flanged connections up to 4", for a maximum flow rate of 2400 l/min
- In line or 90° connections, to meet any type of application
- Base-mounting design, for ease of the replacement of the filter element
- Fine filtration rating, to get a good cleanliness level into the system
- Water removal elements, to remove the free water from the hydraulic fluid. For further information, see the Contamination Management document and the dedicate leaflet.
- Bypass valve, to relieve excessive pressure drop across the filter media
- Vent ports, to avoid air trapped into the filter going into the system
- Drain ports, to remove the fluid from the housing prior the maintenance work
- Visual, electrical and electronic differential clogging indicators

Common applications:

- Off-line filtration of reservoirs
- Filtration systems
- Lubrication systems

Technical data

Filter housing materials

- Head: Anodized Aluminium
- Housing: Anodized Aluminium
- Bypass valve: Anodized Aluminium

Pressure

- Test pressure: 4,5 MPa (45 bar)
- Burst pressure: 12 MPa (120 bar)
- Pulse pressure fatigue test: 1 000 000 cycles with pressure from 0 to 3 MPa (30 bar)

Bypass valve

- Opening pressure 350 kPa (3.5 bar) ±10%
- Other opening pressures on request.

Δp element type

- Microfibre filter elements - series N: 20 bar
- Fluid flow through the filter element from OUT to IN

Seals

- Standard NBR series A
- Optional FPM series V

Temperature

From -25 °C to +110 °C

Connections

LMP 950: In-line Inlet/Outlet
LMP 951: 90° Inlet/Outlet

Note

LMP 950 - 951 filters are provided for vertical mounting



Weights [kg] and volumes [dm³]

Filter series	Weights [kg]			Volumes [dm³]		
	Length	2	3	Length	2	3
LMP 950-951		25.1	33.5		15	28

FILTER ASSEMBLY SIZING
Flow rates [l/min]

Filter series	Length	Filter element design - N Series					
		A03	A06	A10	A16	A25	M25 M60 M90 M250
LMP 950	**2**	613	756	953	1219	1515	2170
	3	1148	1219	1502	1713	1808	2293
LMP 951	**2**	635	789	1007	1308	1649	2420
	3	1226	1308	1634	1881	1993	2566

Maximum flow rate for a complete low and medium pressure filter with a pressure drop Δp = 0.7 bar.
The reference fluid has a kinematic viscosity of 30 mm^2/s (cSt) and a density of 0.86 kg/dm^3.
For different pressure drop or fluid viscosity we recommend to use our selection software available on www.mpfiltri.com.
You can also calculate the right size using the formulas present on the FILTER SIZING paragraph at the beginning of the full catalogue or at the beginning of the filter family brochure.
Please, contact our Sales Department for further additional information.

Execution P02

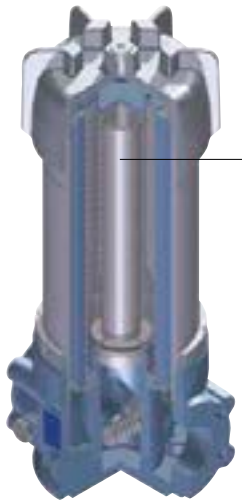

"Internal tube for reduced flow rate" is recommended for flow rate values below 100/150 l/min.

The use of option P02 makes it easier to fill the housing with the operating fluid.

Hydraulic symbols

Filter series	Execution S	Execution B
LMP 950-951	•	•

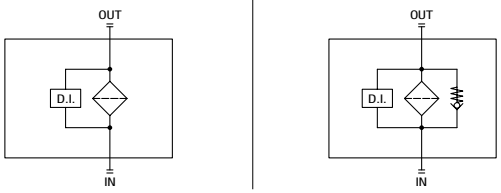

Pressure drop

Filter housings Δp pressure drop

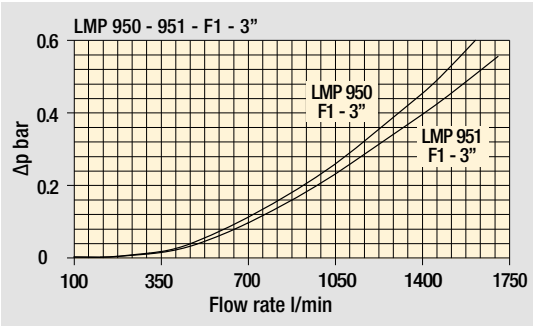

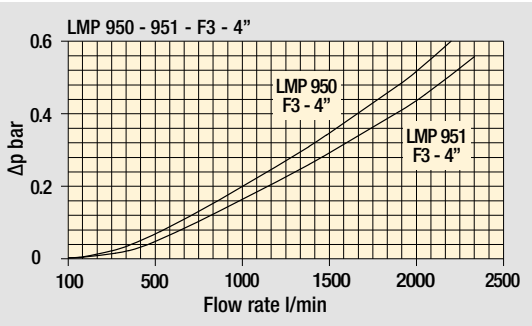

Bypass valve pressure drop

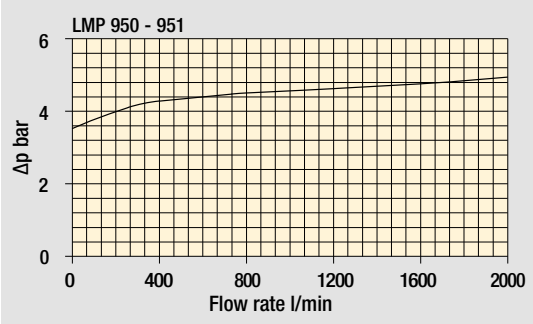

The curves are plotted using mineral oil with density of 0.86 kg/dm^3 in compliance with ISO 3968. Δp varies proportionally with density.

LMP 950-951

Designation & Ordering code

COMPLETE FILTER

Configuration example: LMP951 | 2 | B | A | F2 | A10 | N | P01

Series and size
LMP950 | **LMP951**

Length
2 | **3**

Bypass valve
S Without bypass
B 3.5 bar

Seals and treatments
A NBR
V FPM

Connections
F1 3" SAE 3000 psi/M
F2 3" SAE 3000 psi/UNC
F3 4" SAE 3000 psi/M
F4 4" SAE 3000 psi/UNC

Filtration rating (filter media)
A03 Inorganic microfiber 3 µm
A06 Inorganic microfiber 6 µm
A10 Inorganic microfiber 10 µm
A16 Inorganic microfiber 16 µm
A25 Inorganic microfiber 25 µm
M25 Wire mesh 25 µm
M60 Wire mesh 60 µm
M90 Wire mesh 90 µm

WA025 Water absorber inorganic microfiber 25 µm

Element Δp
N 20 bar

Execution
P01 MP Filtri standard
P02 With internal tube for reduced flow rate
Pxx Customized

FILTER ELEMENT

Configuration example: CU950 | 2 | A10 | A | N | P01

Element series and size
CU950

Element length
2 | **3**

Filtration rating (filter media)
A03 Inorganic microfiber 3 µm
A06 Inorganic microfiber 6 µm
A10 Inorganic microfiber 10 µm
A16 Inorganic microfiber 16 µm
A25 Inorganic microfiber 25 µm
M25 Wire mesh 25 µm
M60 Wire mesh 60 µm
M90 Wire mesh 90 µm

WA025 Water absorber inorganic microfiber 25 µm

Seals
A NBR
V FPM

Element Δp
N 20 bar

Execution
P01 MP Filtri standard
Pxx Customized

ACCESSORIES

Differential indicators		page
DEA	Electrical differential indicator	445
DEM	Electrical differential indicator	445-446
DLA	Electrical / visual differential indicator	446-447
DLE	Electrical / visual differential indicator	447
DTA	Electronic differential indicator	448
DVA	Visual differential indicator	448
DVM	Visual differential indicator	448

Additional features		page
T2	Plug	449
CFA	Retaining clamp	450

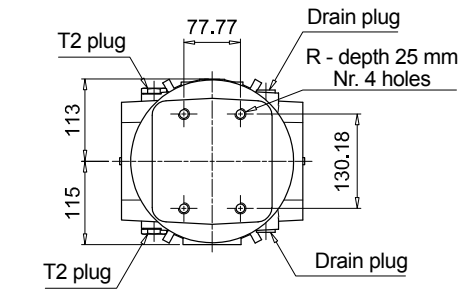

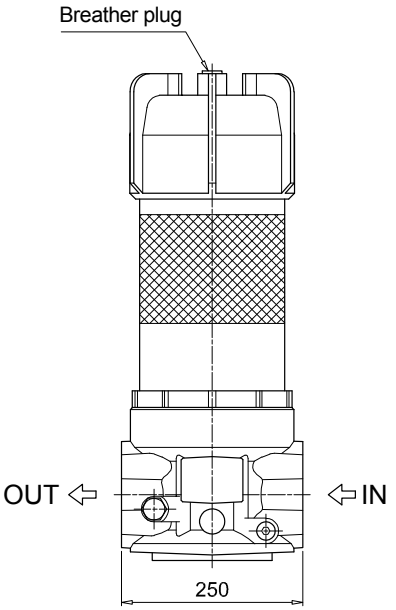

T2 plug =
connection for differential indicator

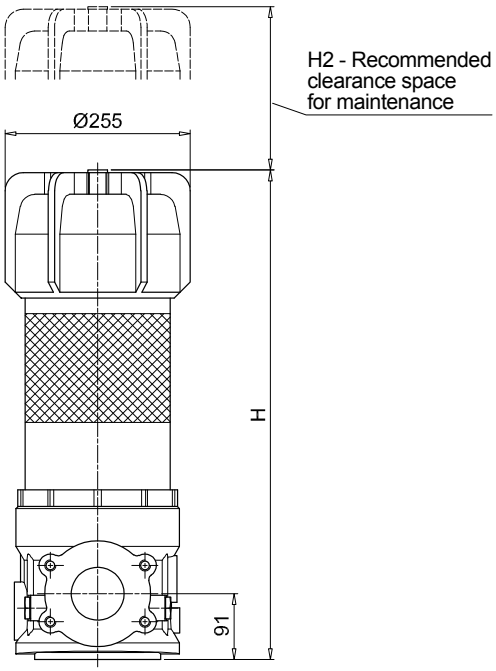

LMP950

Filter length	H [mm]	H2 [mm]
2	680	350
3	1230	900

Connections	R
F1 - F3	M16
F2 - F4	5/8" UNC

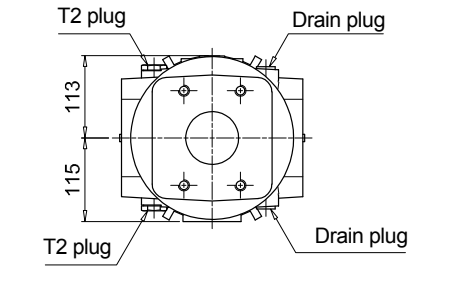

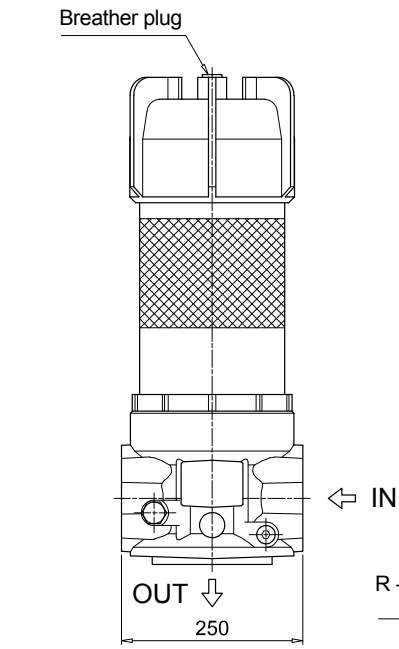

T2 plug =
connection for differential indicator

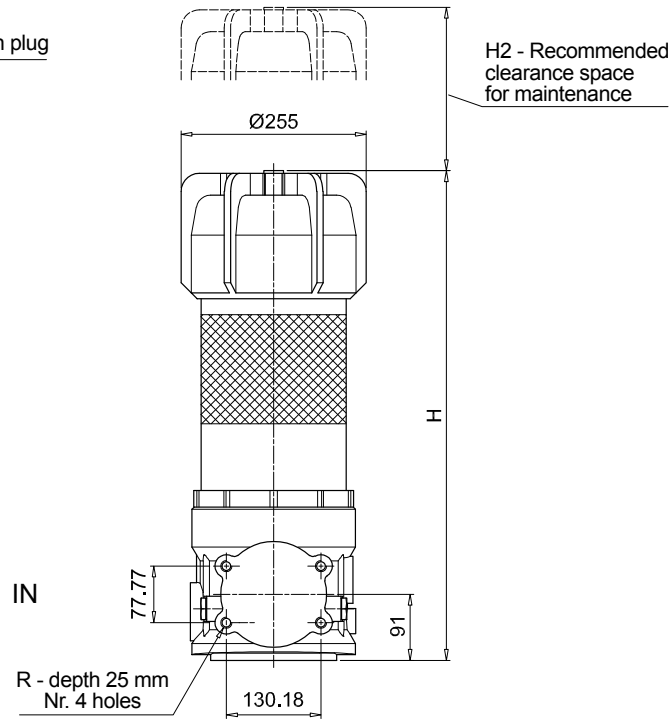

LMP951

Filter length	H [mm]	H2 [mm]
2	680	350
3	1230	900

Connections	R
F1 - F3	M16
F2 - F4	5/8" UNC

LMP 950-951 SPARE PARTS

Order number for spare parts

LMP 950 - 951

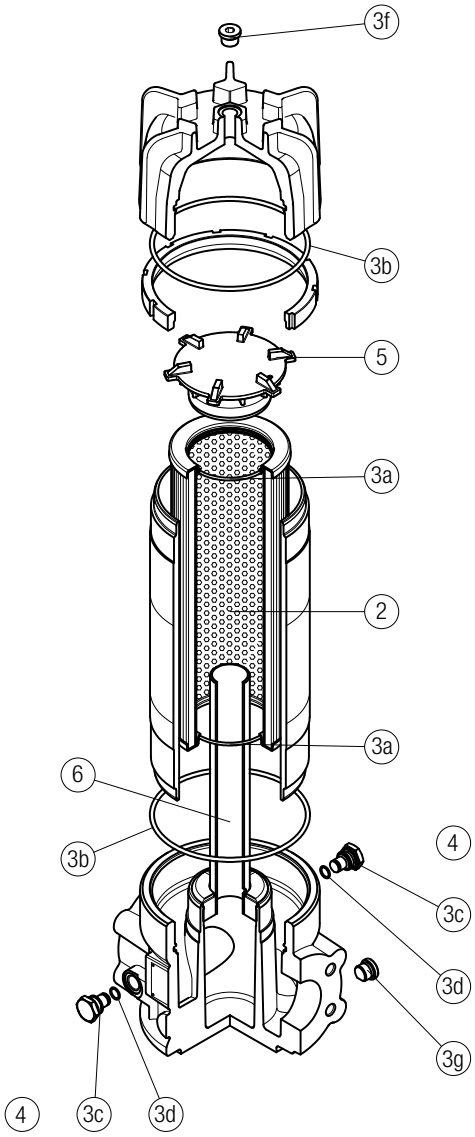

	Q.ty: 2 pcs.	Q.ty: 1 pc.		Q.ty: 2 pcs.		Q.ty: 1 pc.		Q.ty: 1 pc.	
Item:	**2**	**3** (3a ÷ 3g)		**4**		**5**		**6**	
Filter series	**Filter element**	**Seal Kit code number NBR**	**FPM**	**Indicator connection plug NBR**	**FPM**	**Housing spigot no bypass**	**with bypass**	**Tube assembly length 2**	**length 3**
LMP 950-951 length 2-3	See order table	02050367	02050368	T2H	T2V	01044106	02001379	02025032	02025033

LMP 952-953-954 series

Maximum working pressure up to 2.5 MPa (25 bar) - Flow rate up to 4500 l/min



LMP 952-953-954 GENERAL INFORMATION

Description

Low & Medium Pressure filters

Maximum working pressure up to 2.5 MPa (25 bar)
Flow rate up to 4500 l/min

LMP952, LMP953 and LMP954 are ranges of low pressure filter with large filtration surface mainly suitable for lubrication, off-line filtration of the reservoirs and filtration equipment.
Multiple LMP950 filters are connected to a manifold to reduce the pressure drop caused by the filter media and to increase the life time of the filter element.
They are directly connected to the lines of the system through the hydraulic fittings.

Available features:

- 4" flanged connections, for a maximum flow rate of 4500 l/min
- Base-mounting design, for ease of the replacement of the filter element
- Fine filtration rating, to get a good cleanliness level into the system
- Water removal elements, to remove the free water from the hydraulic fluid. For further information, see the Contamination Management document and the dedicate leaflet.
- Bypass valve, to relieve excessive pressure drop across the filter media
- Vent ports, to avoid air trapped into the filter going into the system
- Drain ports, to remove the fluid from the housing prior the maintenance work
- Visual, electrical and electronic differential clogging indicators

Common applications:

- Off-line filtration of reservoirs
- Filtration systems

Technical data

Filter housing materials

- Head: Anodized Aluminium
- Housing: Anodized Aluminium
- Manifolds: Welded - Phosphatized Steel
- Bypass valve: Anodized Aluminium

Pressure

Test pressure: 3.5 MPa (35 bar)

Bypass valve

- Opening pressure 350 kPa (3.5 bar) ±10%
- Other opening pressures on request.

Δp element type

- Microfibre filter elements - series N: 20 bar
- Fluid flow through the filter element from OUT to IN

Number of filter elements

- LMP 952: 2 filter elements CU950-3
- LMP 953: 3 filter elements CU950-3
- LMP 954: 4 filter elements CU950-3

Seals

- Standard NBR series A
- Optional FPM series V

Temperature

From -25 °C to +110 °C

Connections

LMP 952-953-954:
In-line Inlet/Outlet

Note

LMP 952 - 953 - 954 filters
are provided for vertical mounting



Weights [kg] and volumes [dm³]

Filter series	Weights [kg]	Volumes [dm³]
	Length 3	Length 3
LMP 952	96	66
LMP 953	138	99
LMP 954	192	132

FILTER ASSEMBLY SIZING
Flow rates [l/min]

		Filter element design - N Series					
Filter series	Length	A03	A06	A10	A16	A25	M25 M60 M90 M250
LMP 952	**3**	2172	2294	2766	3106	3256	3998
LMP 953	**3**	2842	2964	3403	3696	3820	4395
LMP 954	**3**	3259	3372	3770	4026	4133	4618

Maximum flow rate for a complete low and medium pressure filter with a pressure drop Δp = 0.7 bar.
The reference fluid has a kinematic viscosity of 30 mm^2/s (cSt) and a density of 0.86 kg/dm^3.
For different pressure drop or fluid viscosity we recommend to use our selection software available on www.mpfiltri.com.
You can also calculate the right size using the formulas present on the FILTER SIZING paragraph at the beginning of the full catalogue or at the beginning of the filter family brochure.
Please, contact our Sales Department for further additional information.

Hydraulic symbols

Filter series	Execution S - Execution B	Execution S - Execution B	Execution S - Execution B
LMP 952	•		
LMP 953		•	
LMP 954			•

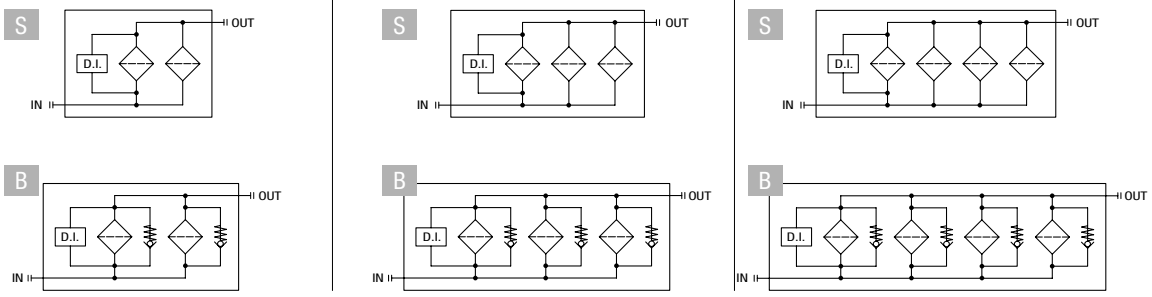

Pressure drop

Filter housings Δp pressure drop

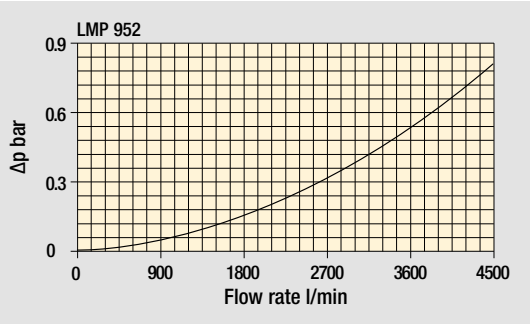

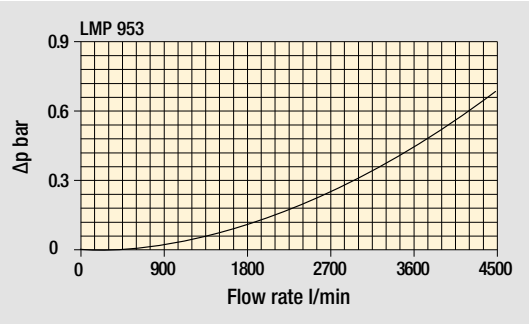

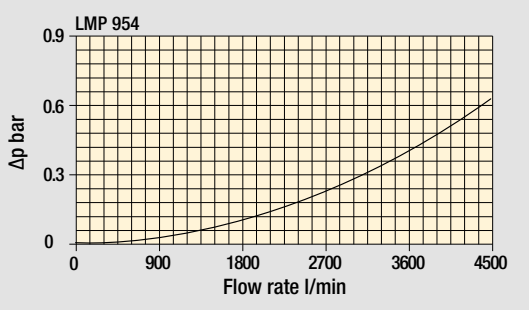

Pressure drop of filter complete with cartridge, oil viscosity 30 mm²/s (cSt)

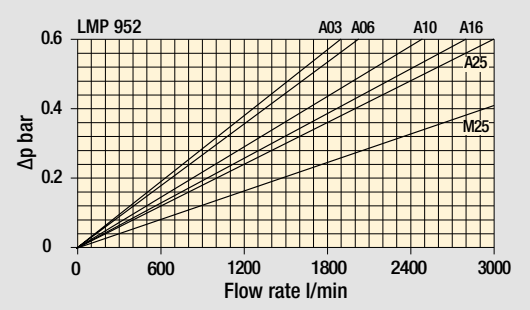

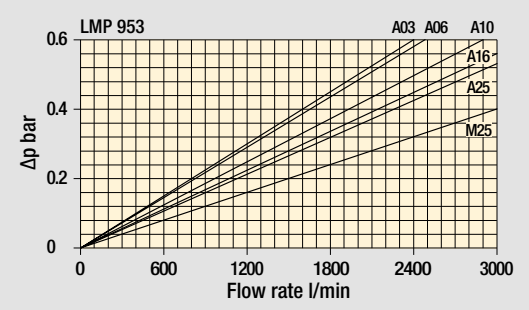

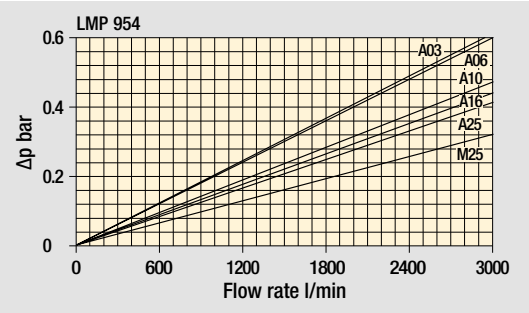

Bypass valve pressure drop

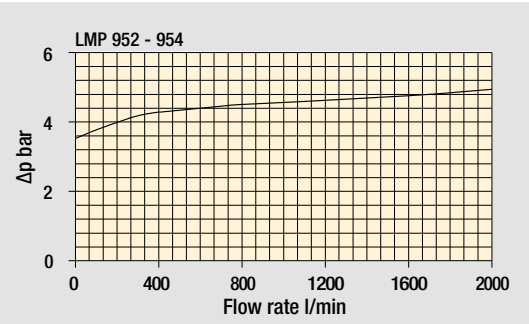

The curves are plotted using mineral oil with density of 0.86 kg/dm³ in compliance with ISO 3968. Δp varies proportionally with density.

Manifolds

Focus on

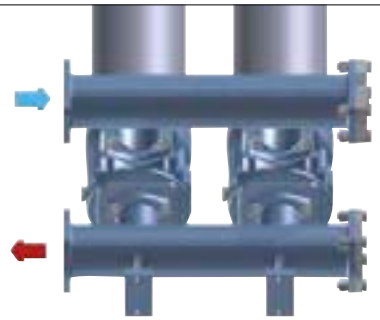

FA

Position of manifolds
IN - OUT connections

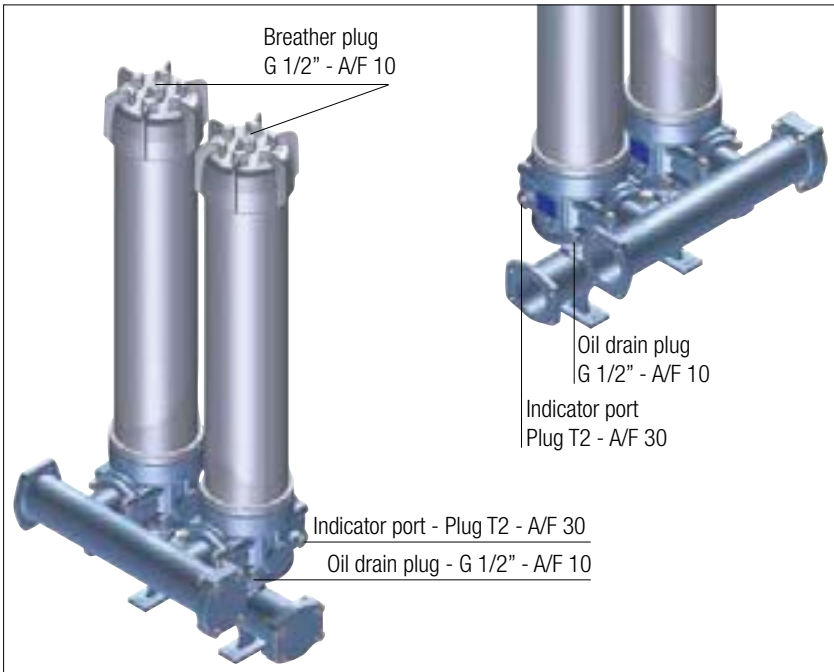

Execution P02

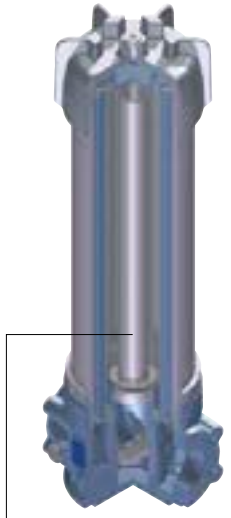

"Internal tube
for reduced flow rate"
is recommended for
flow rate values below:
LMP 952 - 300 l/min
LMP 953 - 450 l/min
LMP 954 - 600 l/min

The use of option P02
makes it easier to fill the
housing with the operating fluid.

CMV4 & CUV4 Flange options

Code	Thread	Materials
CMV4	**G 1 1/4"**	1 - 4" SAE flange 2 - O-R 4437 (FPM) for flange 3 - Plug G 1-1/4" 4 - O-R 3168 for plug (FPM) 5 - No. 4 Hex bolt screws UNI-EN 24017 M16 x 65-10.9 6 - No. 4 Spring washers UNI 1751-B 16 7 - No. 4 Nuts UNI 5587 - M16
CUV4	**SAE 20**	1 - 4" SAE flange 2 - O-R 4437 (FPM) for flange 3 - Plug SAE 20 1 5/8" - 12 UN 4 - 1147 O-R for plug (FPM) 5 - No. 4 Hex bolt screws 5/8" UNC x 2 1/2" 6 - No. 4 Spring washers UNI 1751-B 16 7 - No. 4 Nuts 5/8" UNC

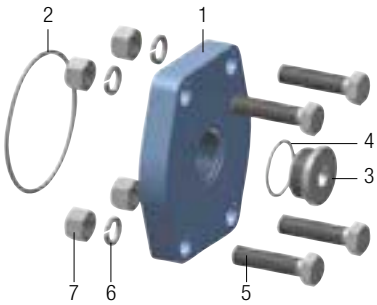

Oil drain plug
Flange with oil drain plug
for rapid discharge

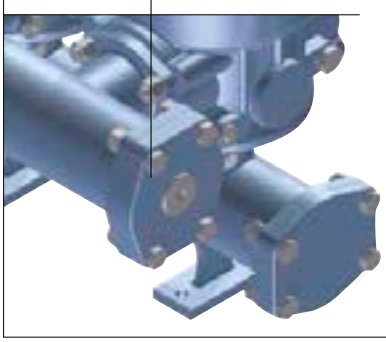

LMP 952-953-954

Designation & Ordering code

COMPLETE FILTER

Configuration example: LMP952 | 3 | B | A | FA | A10 | N | P01

Series and size
LMP952 | **LMP953** | **LMP954**

Length
3

Bypass valve
S Without bypass
B 3.5 bar

Seals and treatments
A NBR
V FPM

Connections
FA 4" SAE 3000 psi

Filtration rating (filter media)
A03 Inorganic microfiber 3 µm
A06 Inorganic microfiber 6 µm
A10 Inorganic microfiber 10 µm
A16 Inorganic microfiber 16 µm
A25 Inorganic microfiber 25 µm
M25 Wire mesh 25 µm
M60 Wire mesh 60 µm
M90 Wire mesh 90 µm
WA025 Water absorber inorganic microfiber 25 µm

Element Δp
N 20 bar

Execution
P01 MP Filtri standard
P02 With internal tube for reduced flow rate
Pxx Customized

FILTER ELEMENT

Configuration example: CU950 | 3 | A10 | A | N | P01

Element series and size
CU950

Element length
3

Filter series and size
LMP952 Nr. 2 filter elements
LMP953 Nr. 3 filter elements
LMP954 Nr. 4 filter elements

Filtration rating (filter media)
A03 Inorganic microfiber 3 µm
A06 Inorganic microfiber 6 µm
A10 Inorganic microfiber 10 µm
A16 Inorganic microfiber 16 µm
A25 Inorganic microfiber 25 µm
M25 Wire mesh 25 µm
M60 Wire mesh 60 µm
M90 Wire mesh 90 µm
WA025 Water absorber inorganic microfiber 25 µm

Seals
A NBR
V FPM

Element Δp
N 20 bar

Execution
P01 MP Filtri standard
Pxx Customized

ACCESSORIES

Differential indicators		page
DEA	Electrical differential indicator	445
DEM	Electrical differential indicator	445-446
DLA	Electrical / visual differential indicator	446-447
DLE	Electrical / visual differential indicator	447
DTA	Electronic differential indicator	448
DVA	Visual differential indicator	448
DVM	Visual differential indicator	448

Additional features		page
T2	Plug	449

LMP952

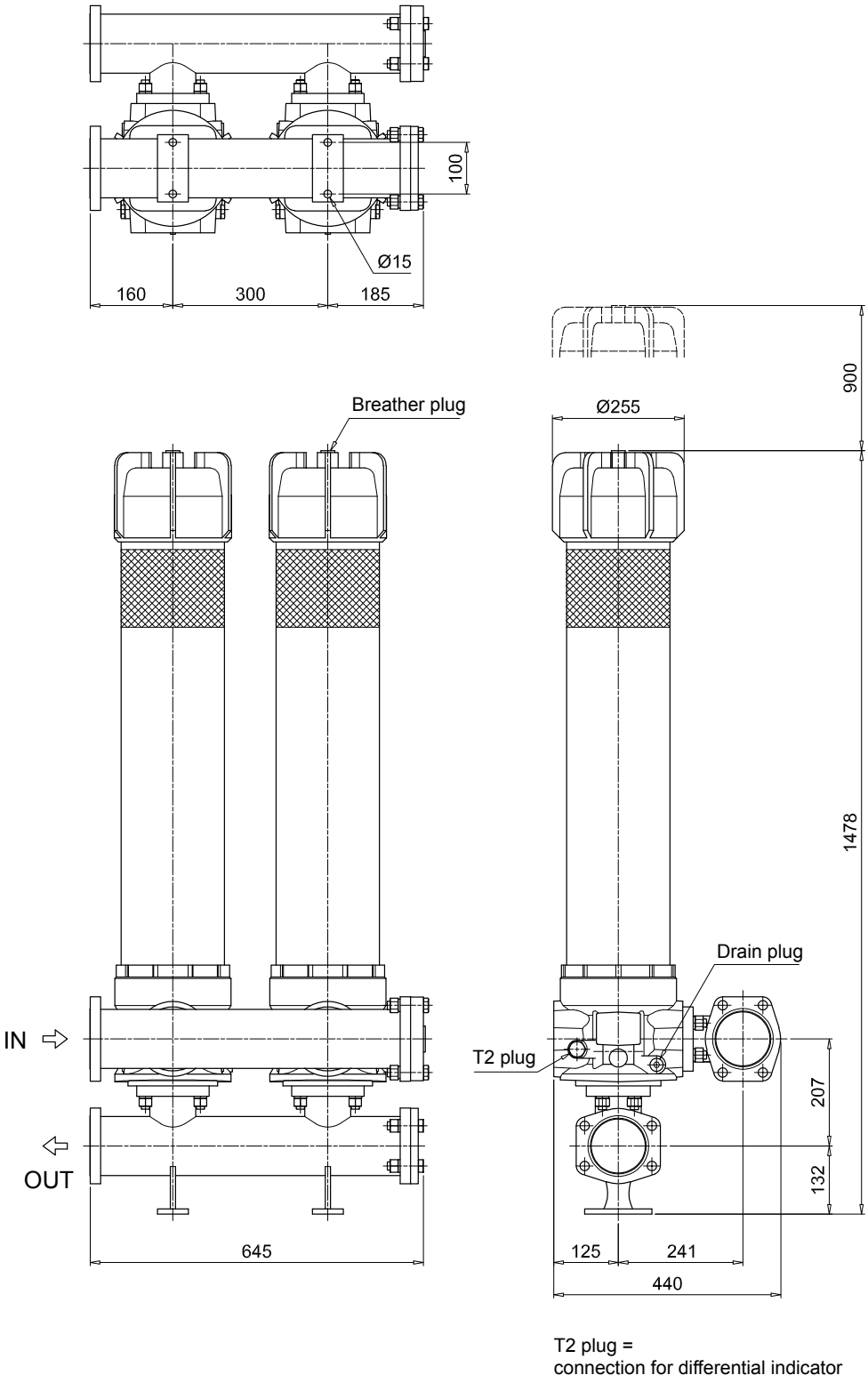

T2 plug =
connection for differential indicator

LMP 952-953-954

Dimensions

LMP953

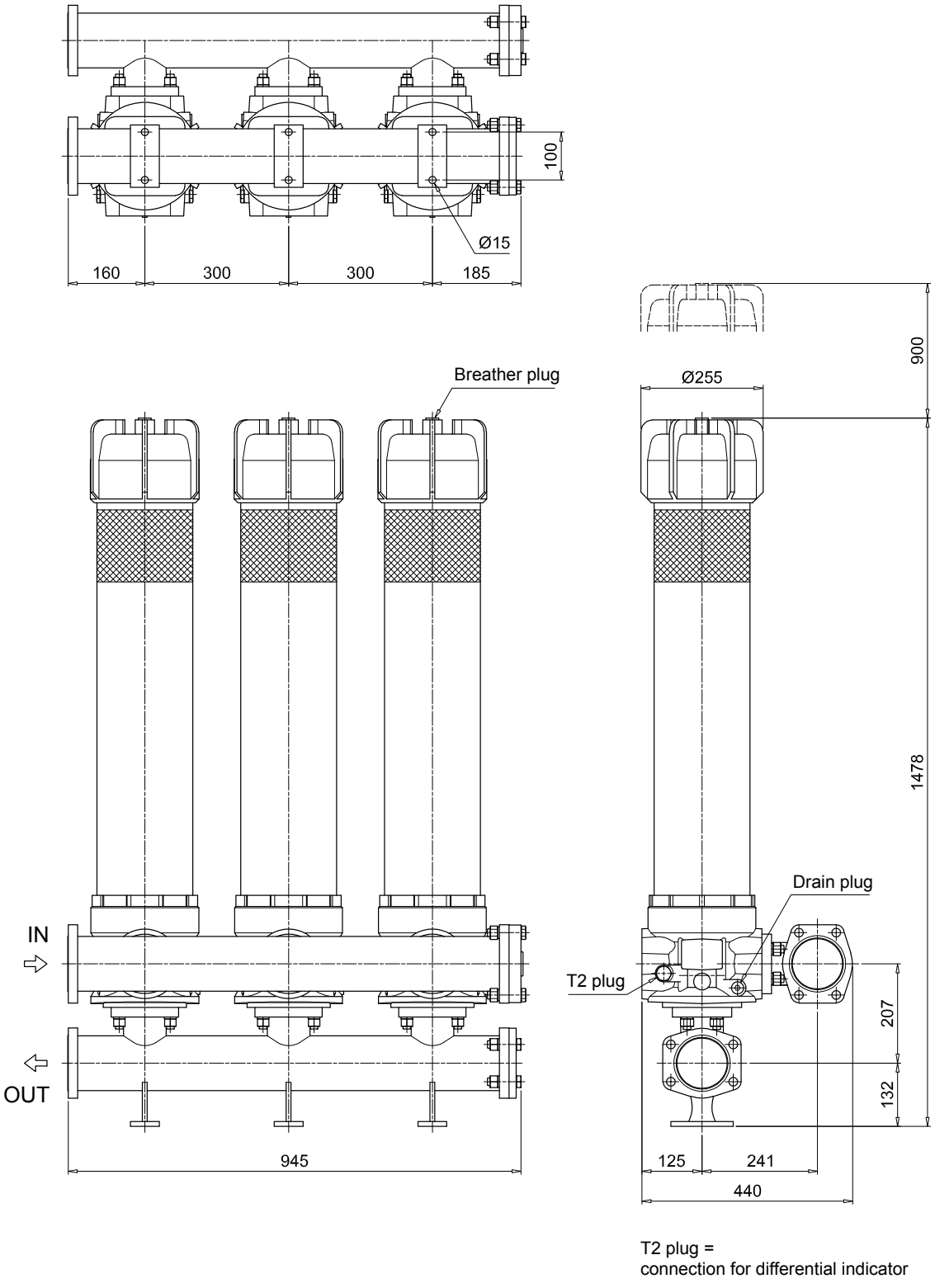

T2 plug =
connection for differential indicator

LMP954

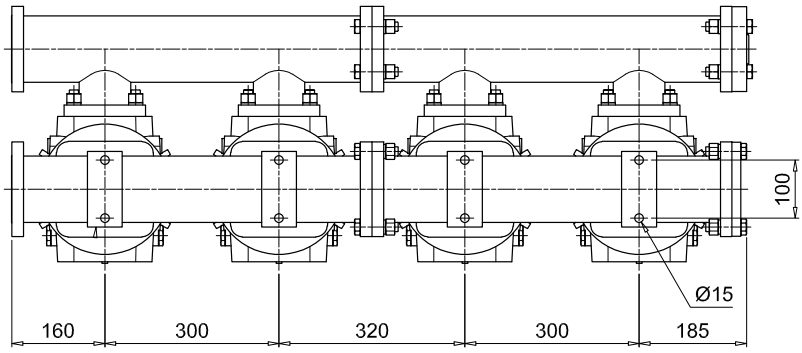

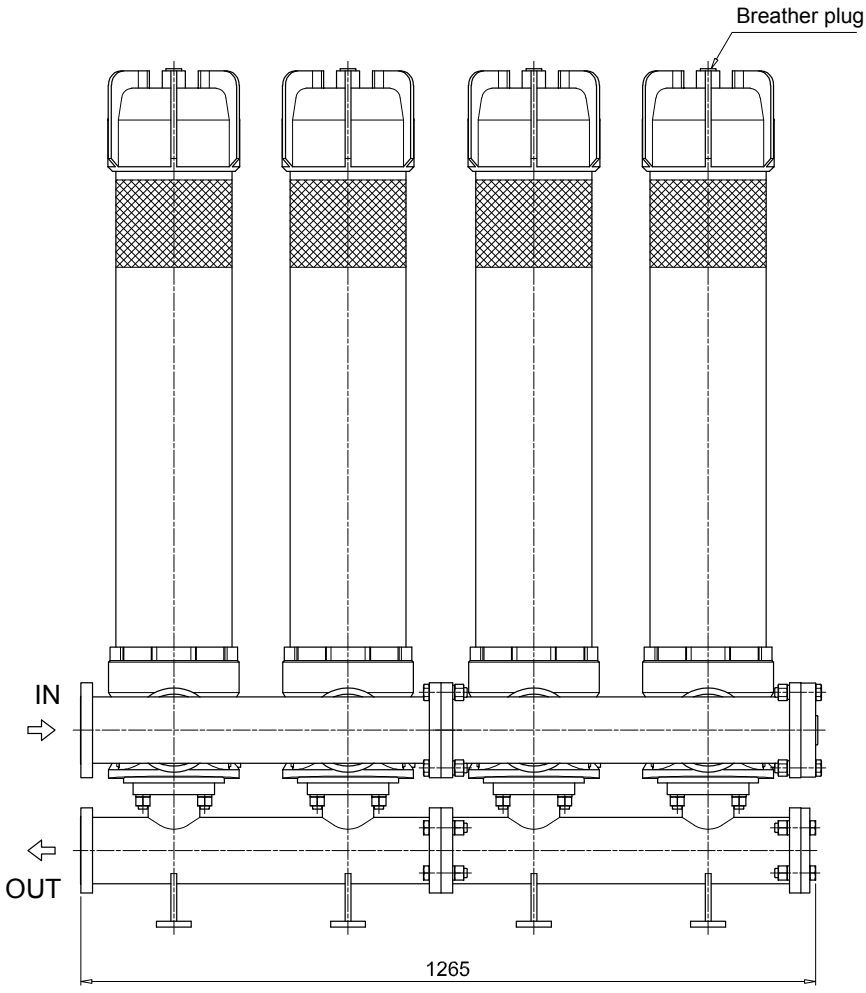

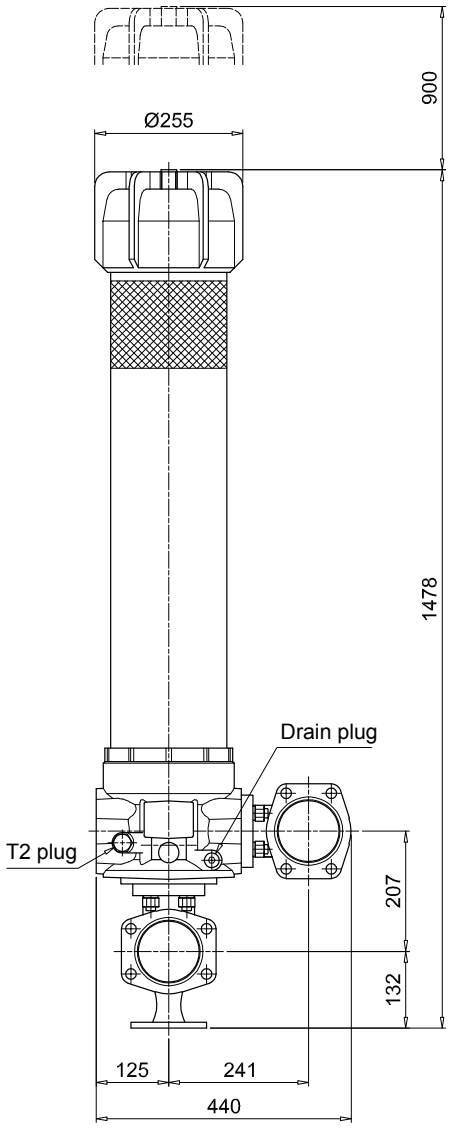

T2 plug =
connection for differential indicator

LMP 952-953-954 SPARE PARTS

Order number for spare parts

LMP 952 - 953 - 954

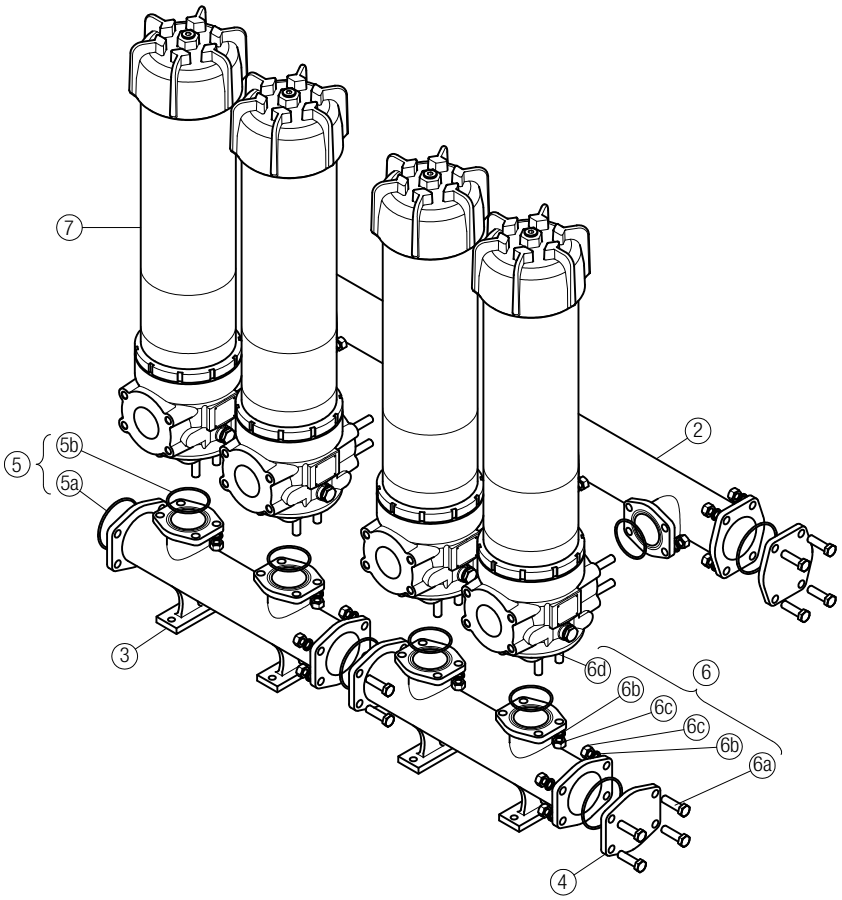

Item 7:
for complete filter code and spare parts, see
LMP 950 - 951 series chapter

Quantity:
- filter spare parts:
LMP 952 - 2 pcs.
LMP 953 - 3 pcs.
LMP 954 - 4 pcs.

- filter seal kit:
LMP 952 - 2 pcs.
LMP 953 - 3 pcs.
LMP 954 - 4 pcs.

Item:	2		3	4		5 (5a-5b)			6 (6a ÷ 6d)		7	
Filter series	Manifold Q.ty	IN	OUT	4" SAE 3000 psi plugged flange Q.ty		Manifolds seal kit Q.ty	NBR	FPM	Threaded fasteners kit Q.ty		Filter Q.ty	
LMP 952	1 pc.	01039270	01039271	2 pcs.	01042012	1 pc.	02050404	02050405	1 pc.	02049051	2 pcs.	LMP9513xxF1xxxNP0x
LMP 953	1 pc.	01039337	01039338	2 pcs.		1 pc.	02050404	02050405	1 pc.	02049052	3 pcs.	
LMP 954	2 pcs.	01039270	01039271	2 pcs.		1 pc.	02050406	02050407	1 pc.	02049053	4 pcs.	

LMD 211 series

Maximum working pressure up to 6 MPa (60 bar) - Flow rate up to 200 l/min



LMD 211 GENERAL INFORMATION

Description

Low & Medium Pressure filters

Duplex
Maximum working pressure up to 6 MPa (60 bar)
Flow rate up to 200 l/min

LMD211 is a range of versatile low pressure duplex filter with integrated changeover function to allow the filter element replacement without the system shut-down.
They are directly connected to the lines of the system through the hydraulic fittings.

Available features:
- Female threaded connections up to 1 1/2" and flanged connections up to 1 1/2", for a maximum flow rate of 200 l/min
- Fine filtration rating, to get a good cleanliness level into the system
- Water removal elements, to remove the free water from the hydraulic fluid. For further information, see the Contamination Management document and the dedicate leaflet.
- Balancing valve integrated in the changeover lever, to equalize the housing pressure before the switch
- Bypass valve, to relieve excessive pressure drop across the filter media
- Vent ports, to avoid air trapped into the filter going into the system
- Drain ports, to remove the fluid from the housing prior the maintenance work
- Optional sampling ports, to get samples of fluid or to connect additional instrument to the system
- Visual, electrical and electronic differential clogging indicators

Common applications:
- Systems where shut-down causes high costs
- Systems where shut-down causes safety issues

Technical data

Filter housing materials
- Head: Aluminium
- Bowl: Cataphoretic Painted Steel
- Bypass valve: AISI 304 - Nylon

Pressure
- Test pressure: 9 MPa (90 bar)
- Burst pressure: 21 MPa (210 bar)
- Pulse pressure fatigue test: 1 000 000 cycles with pressure from 0 to 6 MPa (60 bar)

Bypass valve
- Opening pressure 350 kPa (3.5 bar) ±10%
- Other opening pressures on request.

Δp element type
- Microfibre filter elements - series N: 20 bar
- Fluid flow through the filter element from OUT to IN

Seals
- Standard NBR series A
- Optional FPM series V

Temperature
From -25° C to +110° C

Connections
Inlet/Outlet In-Line

Note
LMD 211 filters are provided for vertical mounting



Weights [kg] and volumes [dm³]

Filter series	Weights [kg]				Volumes [dm³]			
	Length	1	2	3	Length	1	2	3
LMD 211		9.5	11.2	12.8		4.1	4.6	5.3

FILTER ASSEMBLY SIZING
Flow rates [l/min]

		Filter element design - N Series										
Filter series	Length	A03	A06	A10	A16	A25	M25	M60	M90	M250	P10	P25
LMD 211	1	90	95	140	147	156	191	192	192	193	177	181
	2	113	121	158	162	173	192	192	193	193	181	183
	3	131	146	166	169	177	193	194	194	194	184	187

Maximum flow rate for a complete low and medium pressure filter with a pressure drop Δp = 0.7 bar.
The reference fluid has a kinematic viscosity of 30 mm^2/s (cSt) and a density of 0.86 kg/dm^3.
For different pressure drop or fluid viscosity we recommend to use our selection software available on www.mpfiltri.com.
You can also calculate the right size using the formulas present on the FILTER SIZING paragraph at the beginning of the full catalogue or at the beginning of the filter family brochure.
Please, contact our Sales Department for further additional information.

Hydraulic symbols

Filter series	Style S	Style B
LMD 211	•	•

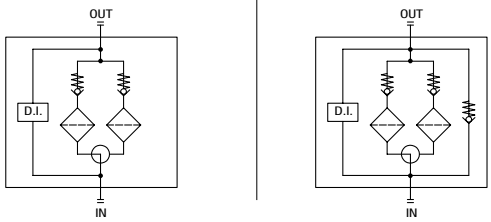

Pressure drop
Filter housings Δp pressure drop

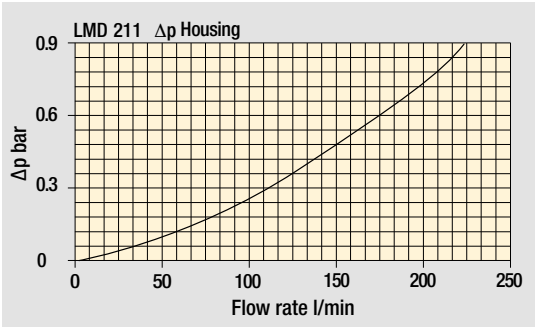

Bypass valve pressure drop

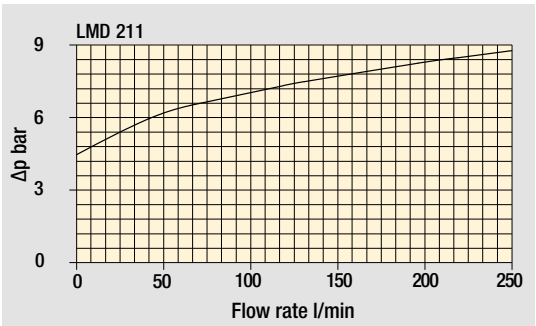

The curves are plotted using mineral oil with density of 0.86 kg/dm^3 in compliance with ISO 3968. Δp varies proportionally with density.

LMD 211

Designation & Ordering code

COMPLETE FILTER

Configuration example: LMD211 | 3 | B | A | C | 6 | A10 | N | P01

Series and size
LMD211

Length
1 | **2** | **3**

Bypass valve
S Without bypass
B 3.5 bar

Seals and treatments		Filtration rating Axx	Mxx	Pxx
A	NBR	•	•	•
V	FPM	•	•	•
W	NBR compatible with fluids HFA-HFB-HFC	•	•	

Connections
C G 1 1/2"
F 1 1/2" NPT
I SAE 24 - 1 7/8" - 12 UN
L 1 1/2" SAE 3000 psi/M + G 1 1/4"
M 1 1/2" SAE 3000 psi/UNC + 1 1/4" NPT
N 1 1/2" SAE 3000 psi/UNC + SAE 20 - 1 5/8" UN

Connection for differential indicator
6 With plugged connection

Filtration rating (filter media)

A03	Inorganic microfiber 3 µm	**M25**	Wire mesh 25 µm
A06	Inorganic microfiber 6 µm	**M60**	Wire mesh 60 µm
A10	Inorganic microfiber 10 µm	**M90**	Wire mesh 90 µm
A16	Inorganic microfiber 16 µm	**P10**	Resin impregnated paper 10 µm
A25	Inorganic microfiber 25 µm	**P25**	Resin impregnated paper 25 µm

WA025 Water absorber inorganic microfiber 25 µm

Element Δp
N 20 bar

Execution
P01 MP Filtri standard
Pxx Customized

FILTER ELEMENT

Configuration example: CU210 | 3 | A10 | A | N | P01

Element series and size
CU210

Element length
1 | **2** | **3**

Filtration rating (filter media)

A03	Inorganic microfiber 3 µm	**M25**	Wire mesh 25 µm
A06	Inorganic microfiber 6 µm	**M60**	Wire mesh 60 µm
A10	Inorganic microfiber 10 µm	**M90**	Wire mesh 90 µm
A16	Inorganic microfiber 16 µm	**P10**	Resin impregnated paper 10 µm
A25	Inorganic microfiber 25 µm	**P25**	Resin impregnated paper 25 µm

WA025 Water absorber inorganic microfiber 25 µm

Seals		Filtration rating Axx	Mxx	Pxx
A	NBR	•	•	•
V	FPM	•	•	•
W	NBR compatible with fluids HFA-HFB-HFC	•	•	

Element Δp
N 20 bar

Execution
P01 MP Filtri standard
Pxx Customized

ACCESSORIES

Differential indicators

		page
DEA	Electrical differential indicator	445
DEM	Electrical differential indicator	445-446
DLA	Electrical / visual differential indicator	446-447
DLE	Electrical / visual differential indicator	447
DTA	Electronic differential indicator	448
DVA	Visual differential indicator	448
DVM	Visual differential indicator	448

Additional features

		page
T2	Plug	449

LMD211	
Filter length	**H [mm]**
1	383
2	513
3	651

Connections	**R**
C	M10
F - I	3/8" UNC
L	M10
M - N	3/8" UNC

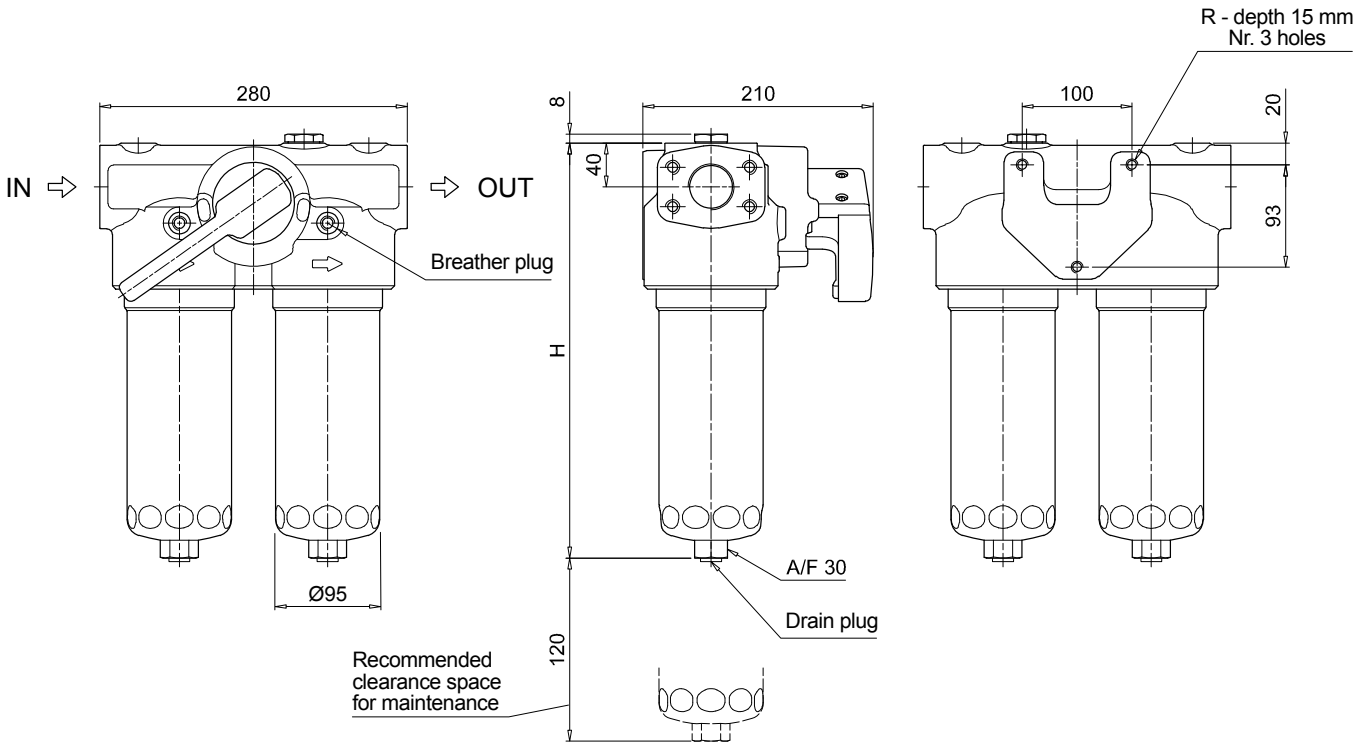

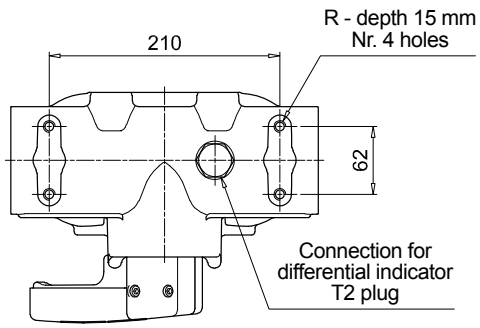

LMD 211 SPARE PARTS

Order number for spare parts

LMD 211

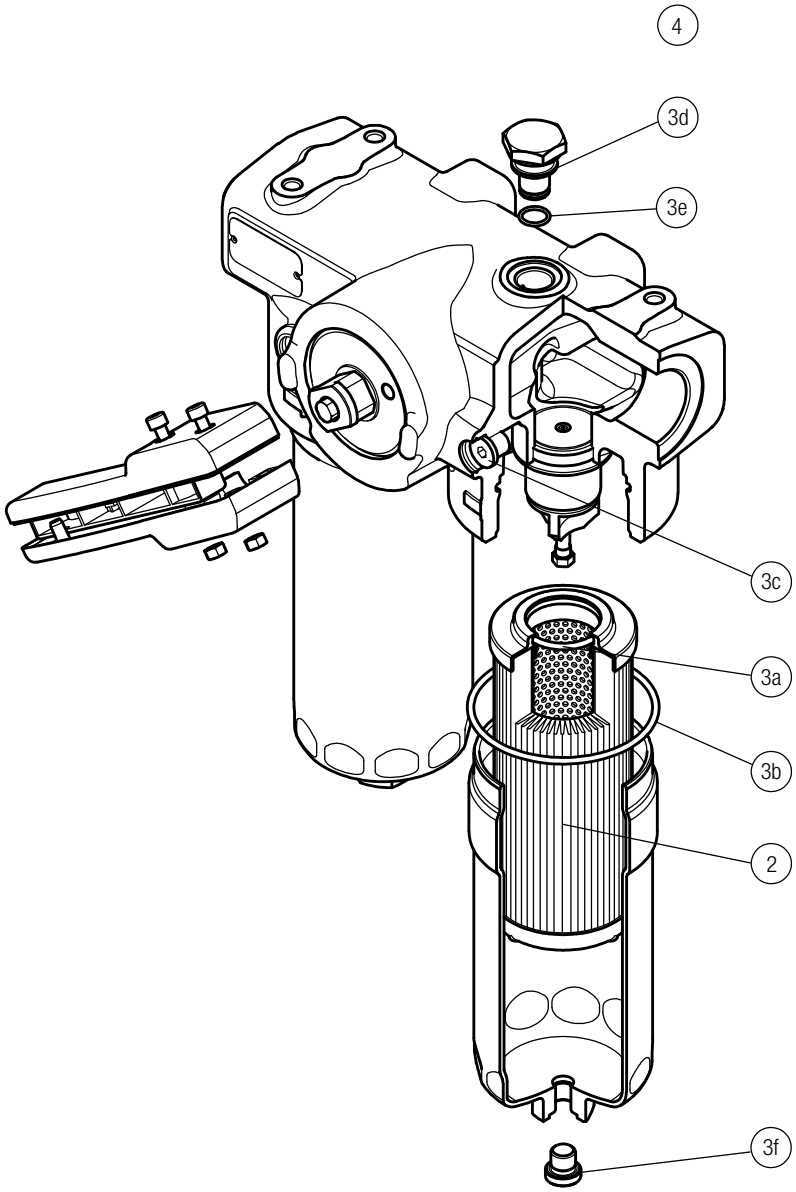

	Q.ty: 1 pc.	Q.ty: 1 pc.		Q.ty: 2 pcs.	
Item:	**2**	**3** (3a ÷ 3f)		**4**	
Filter series	**Filter element**	**Seal Kit code number NBR**	**FPM**	**Indicator connection plug NBR**	**FPM**
LDD	See order table	02050671	02050672	T2H	T2V

LMD 400-401 & 431 series

Maximum working pressure up to 1.6 MPa (16 bar) - Flow rate up to 600 l/min



Description

Low & Medium Pressure filters

Duplex
Maximum working pressure up to 1.6 MPa (16 bar)
Flow rate up to 600 l/min

LMD400 is a range of versatile low pressure duplex filter with integrated changeover function to allow the filter element replacement without the system shut-down.
They are directly connected to the lines of the system through the hydraulic fittings.

Available features:
- 2 1/2" flanged connections, for a maximum flow rate of 600 l/min
- LMD400: In-line connections
- LMD401: In-line connections with compact design
- LMD431: In-line connections with compact design and base mounting
- Base-mounting design also available, for ease of the replacement of the filter element
- Fine filtration rating, to get a good cleanliness level into the system
- Water removal elements, to remove the free water from the hydraulic fluid. For further information, see the Contamination Management document and the dedicate leaflet.
- Balancing valve, to equalize the housing pressure before the switch
- Bypass valve, to relieve excessive pressure drop across the filter media
- Vent ports, to avoid air trapped into the filter going into the system
- Drain ports, to remove the fluid from the housing prior the maintenance work
- Visual, electrical and electronic differential clogging indicators

Common applications:
- Systems where shut-down causes high costs
- Systems where shut-down causes safety issues

Technical data

Filter housing materials
- Head: Anodized Aluminium
- Housing: Anodized Aluminium
- Manifolds: Steel - Painted black
- Bypass valve: Steel
- 3-way ball valve: Steel housings - Stainless Steel ball
- Valve: Phosphatized Steel - Stainless Steel

Pressure
Test pressure: 2.5 MPa (25 bar)

Bypass valve
- Opening pressure 350 kPa (3.5 bar) ±10%
- Other opening pressures on request.

Δp element type
- Microfibre filter elements - series N - W: 20 bar
- Fluid flow through the filter element from OUT to IN

Seals
FPM series V

Temperature
From -25° C to +110° C

Connections
- LMD 400-401: In-line Inlet/Outlet
- LMD 401: Same side
- LMD 400-401-431: In-Line

Note
LMP 400 - 401 - 431 filters are provided for vertical mounting



Weights [kg] and volumes [dm³]

Filter series	Weights [kg]				Volumes [dm³]			
	Length	4	5	6	Length	4	5	6
LMD 400 - 401		60	65	72		20	28	33
LMD 431		-	68	78		-	28	33

FILTER ASSEMBLY SIZING
Flow rates [l/min]

Filter series	Length	Filter element design - N Series							
		A03	A06	A10	A16	A25	M25 M60 M90 M250	P10	P25
LMD 400 - 401	4	308	349	453	474	530	628	547	567
	5	395	427	509	547	589	637	577	592
	6	429	483	558	568	597	639	583	597
LMD 431	5	395	427	509	547	589	637	577	592
	6	429	483	558	568	597	639	583	597

Maximum flow rate for a complete low and medium pressure filter with a pressure drop Δp = 0.7 bar.
The reference fluid has a kinematic viscosity of 30 mm^2/s (cSt) and a density of 0.86 kg/dm^3.
For different pressure drop or fluid viscosity we recommend to use our selection software available on www.mpfiltri.com.
You can also calculate the right size using the formulas present on the FILTER SIZING paragraph at the beginning of the full catalogue or at the beginning of the filter family brochure.
Please, contact our Sales Department for further additional information.

Hydraulic symbols

Filter series	Execution S	Execution B
LMD 400 - 401	•	•
LMD 431	•	•

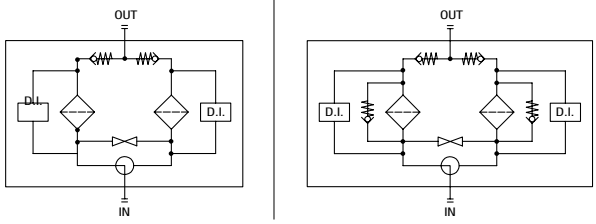

Pressure drop
Filter housings Δp pressure drop

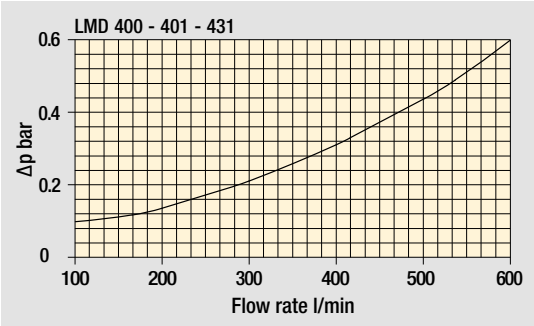

Bypass valve pressure drop

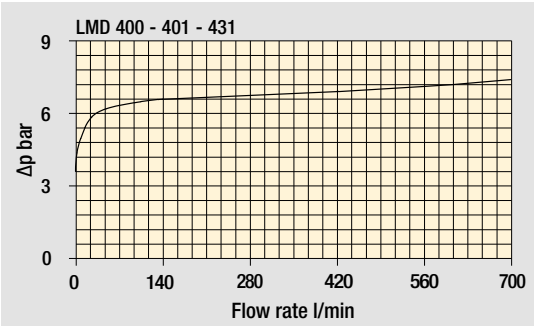

The curves are plotted using mineral oil with density of 0.86 kg/dm^3 in compliance with ISO 3968. Δp varies proportionally with density.

Focus on

A	Breather plug G 3/8" - A/F 8
B	Indicator port Plug T2 - A/F 30
C	Compensation valve
D	Oil drain plug G 3/8" - A/F 8

LMP 400 - 401 & 431
Fit one differential indicator for individual filter assembly.

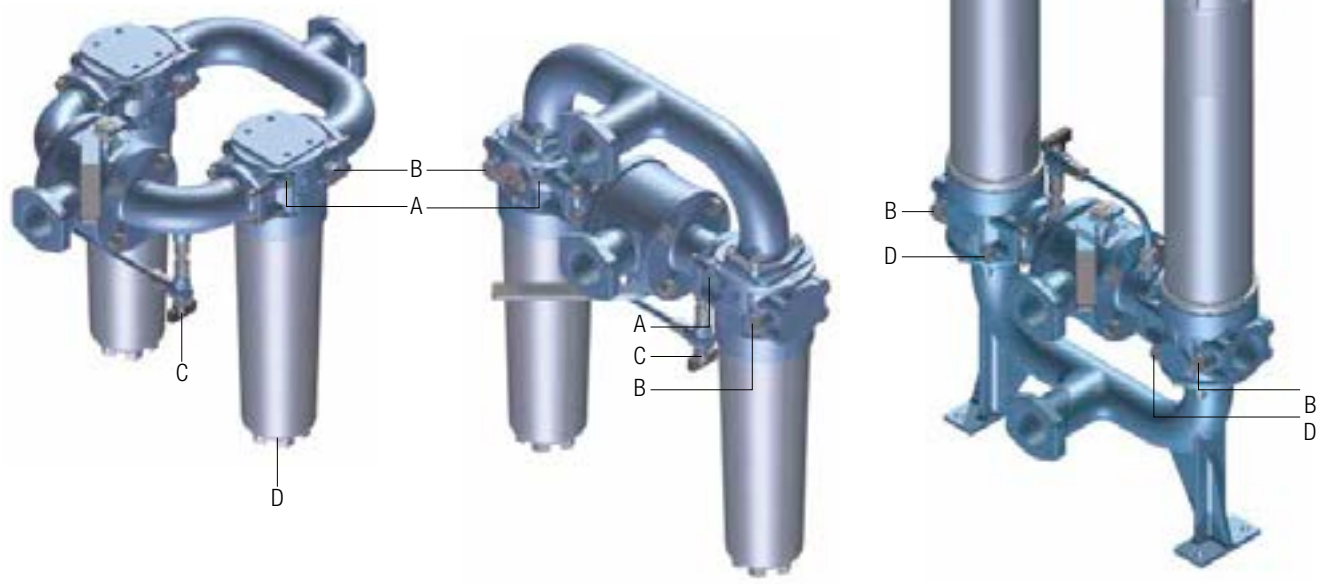

LMD 431: Execution P02

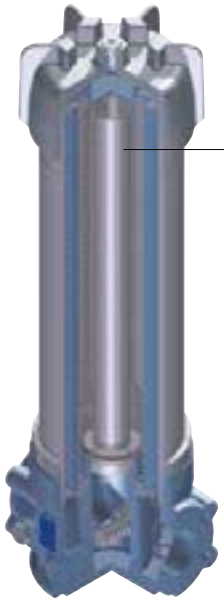

"Internal tube for reduced flow rate" is recommended for flow rate values below 150 l/min.

The use of option P02 makes it easier to fill the housing with the operating fluid.

LMD 400-401

Designation & Ordering code

COMPLETE FILTER

Configuration example: LMD401 | 4 | B | V | F1 | A10 | N | P01

Series and size

LMD400 | **LMD401**

Length

4 | **5** | **6**

Bypass valve

S Without bypass

B 3.5 bar

Seals and treatments	Filtration rating Axx	Mxx	Pxx
V FPM	•	•	•

Connections	LMD400	LMD401
F1 2 1/2" SAE 3000 psi/M	•	•
F2 2 1/2" SAE 3000 psi/UNC	•	•
F3 2 1/2" SAE 3000 psi/M, In-line connections		•
F4 2 1/2" SAE 3000 psi/UNC, In-line connections		•

Filtration rating (filter media)

A03 Inorganic microfiber 3 µm
A06 Inorganic microfiber 6 µm
A10 Inorganic microfiber 10 µm
A16 Inorganic microfiber 16 µm
A25 Inorganic microfiber 25 µm
M25 Wire mesh 25 µm
M60 Wire mesh 60 µm
M90 Wire mesh 90 µm
P10 Resin impregnated paper 10 µm
P25 Resin impregnated paper 25 µm

WA025 Water absorber inorganic microfiber 25 µm

Element Δp

N 20 bar

Execution	Filter length 4	5	6
P01 MP Filtri standard	•	•	•
P02 Maintenance from the bottom of the housing		•	•
Pxx Customized			

FILTER ELEMENT

Configuration example: CU400 | 4 | A10 | V | N | P01

Element series and size

CU400

Element length

4 | **5** | **6**

Filtration rating (filter media)

A03 Inorganic microfiber 3 µm
A06 Inorganic microfiber 6 µm
A10 Inorganic microfiber 10 µm
A16 Inorganic microfiber 16 µm
A25 Inorganic microfiber 25 µm
M25 Wire mesh 25 µm
M60 Wire mesh 60 µm
M90 Wire mesh 90 µm
P10 Resin impregnated paper 10 µm
P25 Resin impregnated paper 25 µm

WA025 Water absorber inorganic microfiber 25 µm

Seals	Filtration rating Axx	Mxx	Pxx
V FPM	•	•	•

Element Δp

N 20 bar

Execution

P01 MP Filtri standard
Pxx Customized

ACCESSORIES

Differential indicators	page
DEA Electrical differential indicator	445
DEM Electrical differential indicator	445-446
DLA Electrical / visual differential indicator	446-447
DLE Electrical / visual differential indicator	447

	page
DTA Electronic differential indicator	448
DVA Visual differential indicator	448
DVM Visual differential indicator	448

Additional features	page
T2 Plug	449

Dimensions

LMD400	
Length 4	
Connections	**R**
F1	M12
F2	1/2" UNC
F3	M12
F4	1/2" UNC

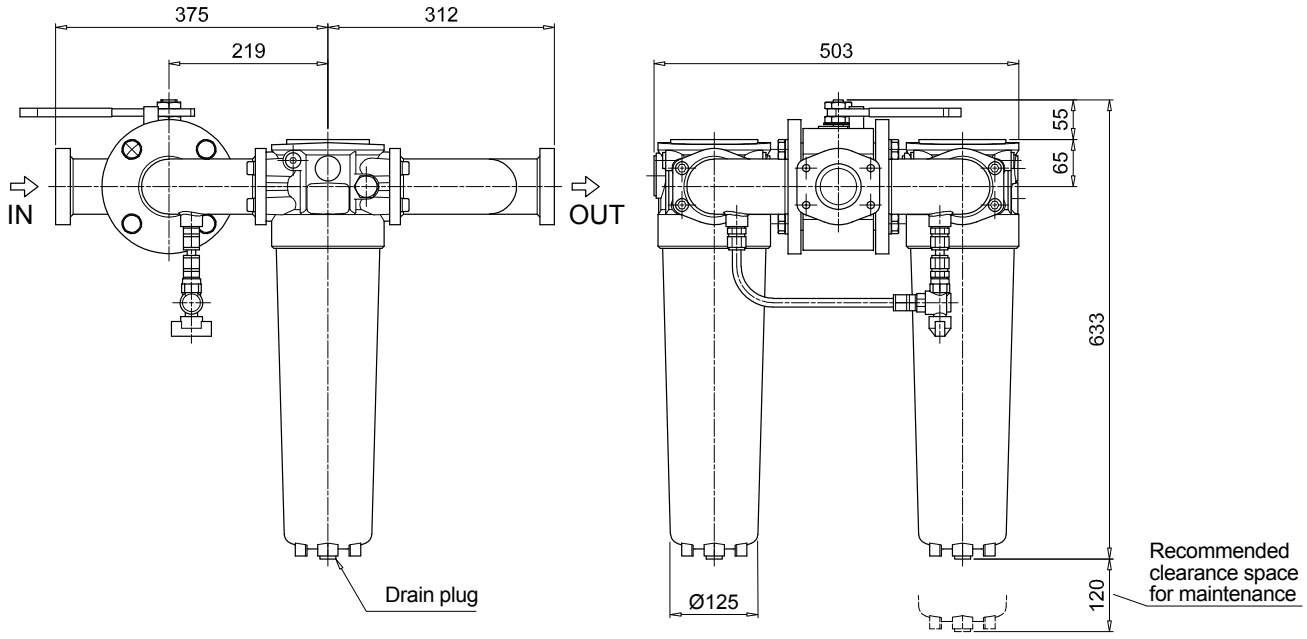

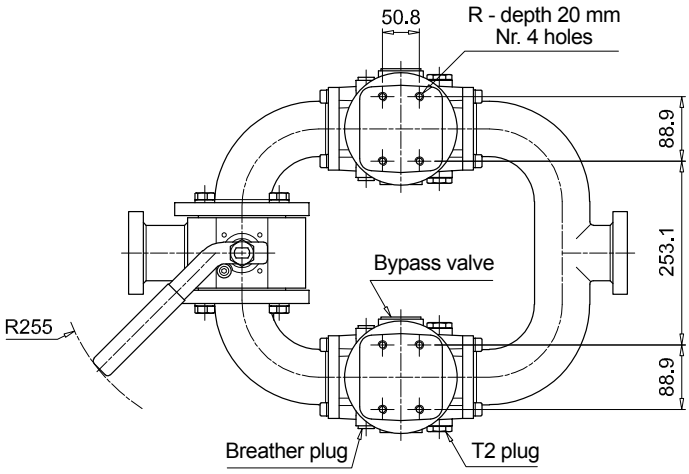

T2 plug =
Connection for differential indicator

LMD 400-401

Dimensions

LMD400			
Length 5 - 6			
Filter length	**H [mm]**	**H2 [mm] Execution P01**	**P02**
5	883	120	660
6	1213	120	690

Connections	R
F1	M12
F2	1/2" UNC
F3	M12
F4	1/2" UNC

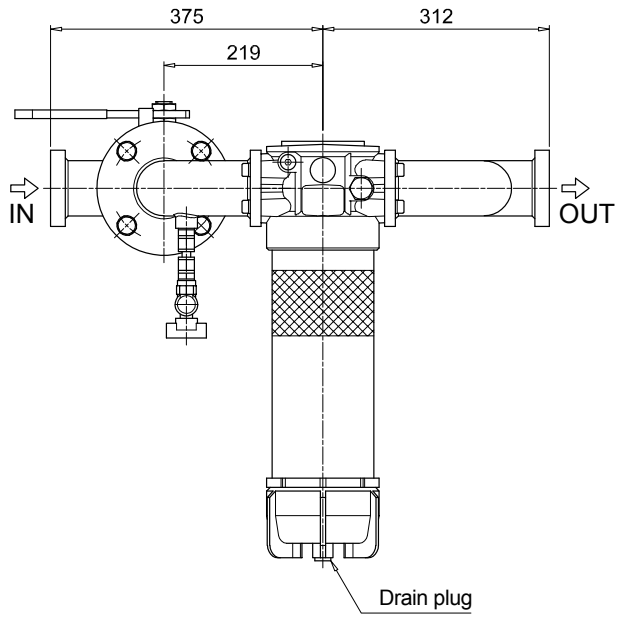

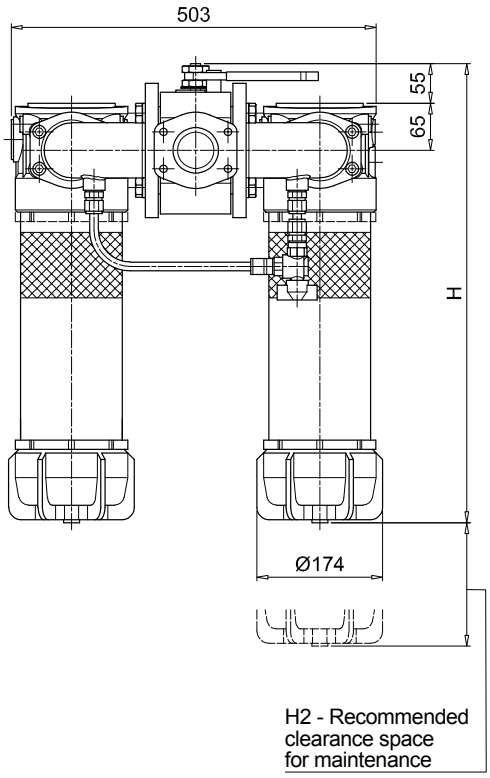

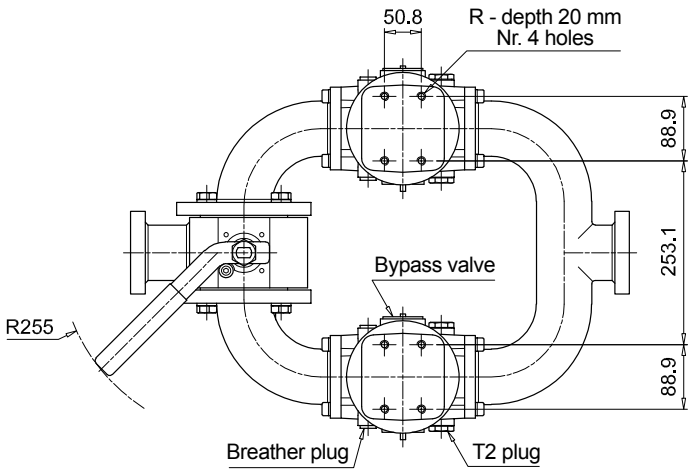

T2 plug =
Connection for differential indicator

LMD401	
Length 4	
Connections	**R**
F1	M12
F2	1/2" UNC
F3	M12
F4	1/2" UNC

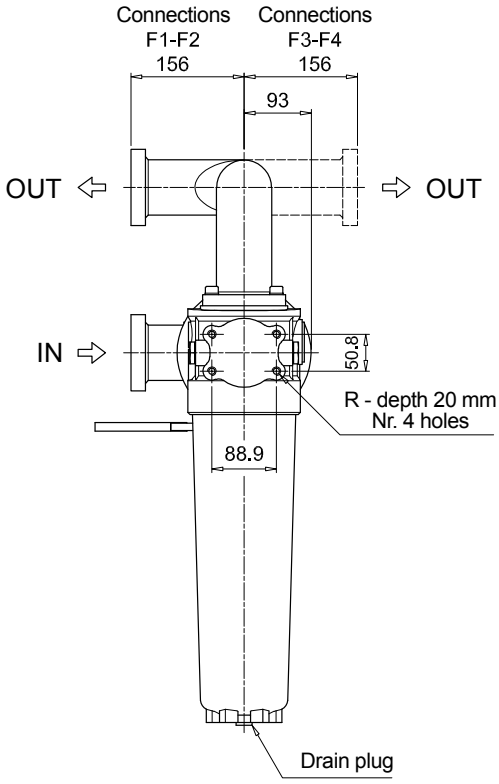

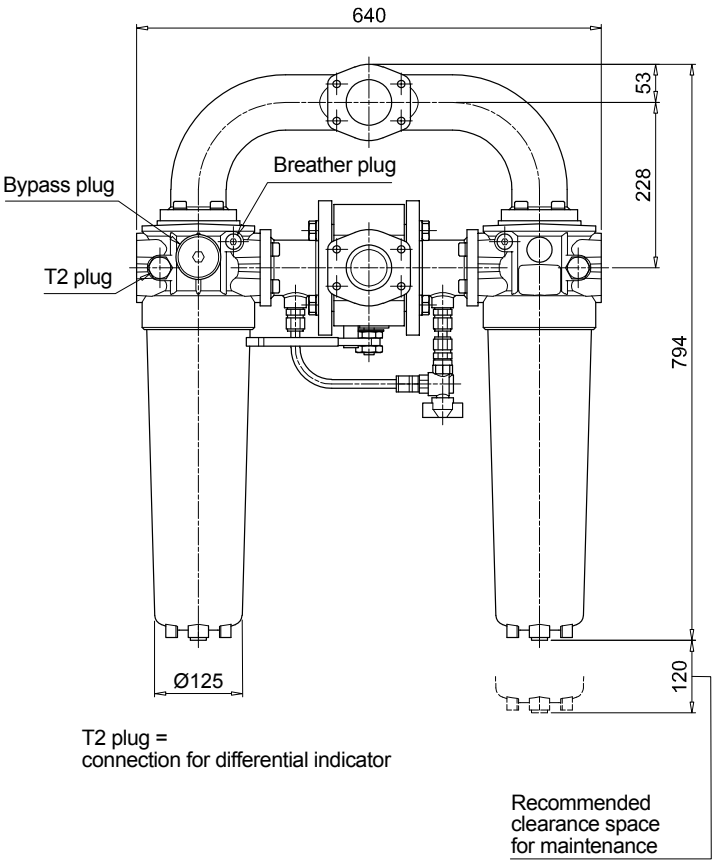

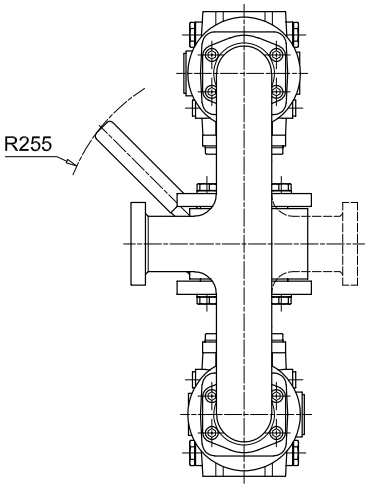

LMD 400-401

Dimensions

LMD401			
Length 5 - 6			
Filter length	**H [mm]**	**H2 [mm] Execution P01**	**P02**
5	1044	120	660
6	1374	120	690

Connections	R
F1	M12
F2	1/2" UNC
F3	M12
F4	1/2" UNC

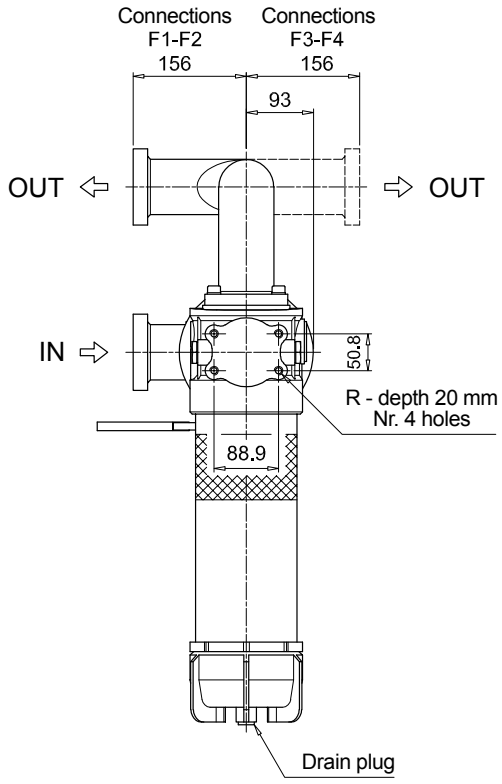

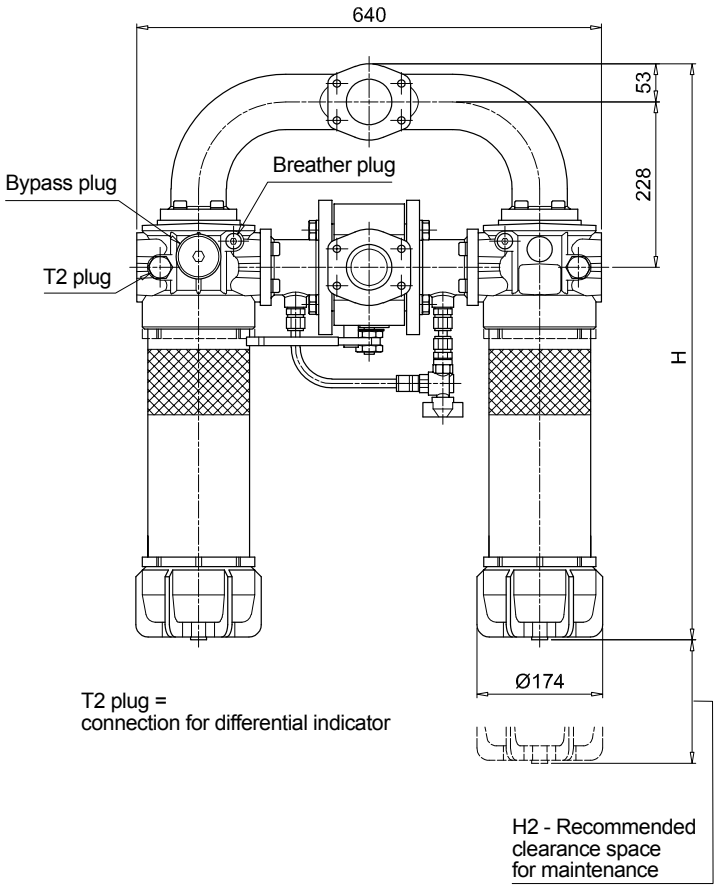

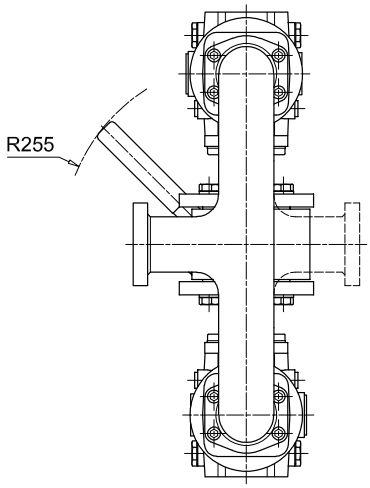

LMD 431

Designation & Ordering code

COMPLETE FILTER

Configuration example: LMD431 | 5 | B | V | F1 | A10 | N | P01

Series and size
LMD431

Length
5 | **6**

Bypass valve
S Without bypass
B 3.5 bar

Seals and treatments — Filtration rating: Axx | Mxx | Pxx
V FPM — • | • | •

Connections
F1 2 1/2" SAE 3000 psi/M
F2 2 1/2" SAE 3000 psi/UNC
F3 2 1/2" SAE 3000 psi/M, In-line connections
F4 2 1/2" SAE 3000 psi/UNC, In-line connections

Filtration rating (filter media)
A03 Inorganic microfiber 3 µm
A06 Inorganic microfiber 6 µm
A10 Inorganic microfiber 10 µm
A16 Inorganic microfiber 16 µm
A25 Inorganic microfiber 25 µm
M25 Wire mesh 25 µm
M60 Wire mesh 60 µm
M90 Wire mesh 90 µm
P10 Resin impregnated paper 10 µm
P25 Resin impregnated paper 25 µm
WA025 Water absorber inorganic microfiber 25 µm

Element Δp
N 20 bar

Execution
P01 MP Filtri standard
P02 With internal tube for reduced flow rate
Pxx Customized

FILTER ELEMENT

Configuration example: CU400 | 5 | A10 | V | N | P01

Element series and size
CU400

Element length
5 | **6**

Filtration rating (filter media)
A03 Inorganic microfiber 3 µm
A06 Inorganic microfiber 6 µm
A10 Inorganic microfiber 10 µm
A16 Inorganic microfiber 16 µm
A25 Inorganic microfiber 25 µm
M25 Wire mesh 25 µm
M60 Wire mesh 60 µm
M90 Wire mesh 90 µm
P10 Resin impregnated paper 10 µm
P25 Resin impregnated paper 25 µm
WA025 Water absorber inorganic microfiber 25 µm

Seals — Filtration rating: Axx | Mxx | Pxx
V FPM — • | • | •

Element Δp
N 20 bar

Execution
P01 MP Filtri standard
Pxx Customized

ACCESSORIES

Differential indicators		page
DEA	Electrical differential indicator	445
DEM	Electrical differential indicator	445-446
DLA	Electrical / visual differential indicator	446-447
DLE	Electrical / visual differential indicator	447
DTA	Electronic differential indicator	448
DVA	Visual differential indicator	448
DVM	Visual differential indicator	448

Additional features		page
T2	Plug	449

Dimensions

LMD431		
Filter length	**H [mm]**	**H2 [mm]**
5	1161	660
6	1491	690

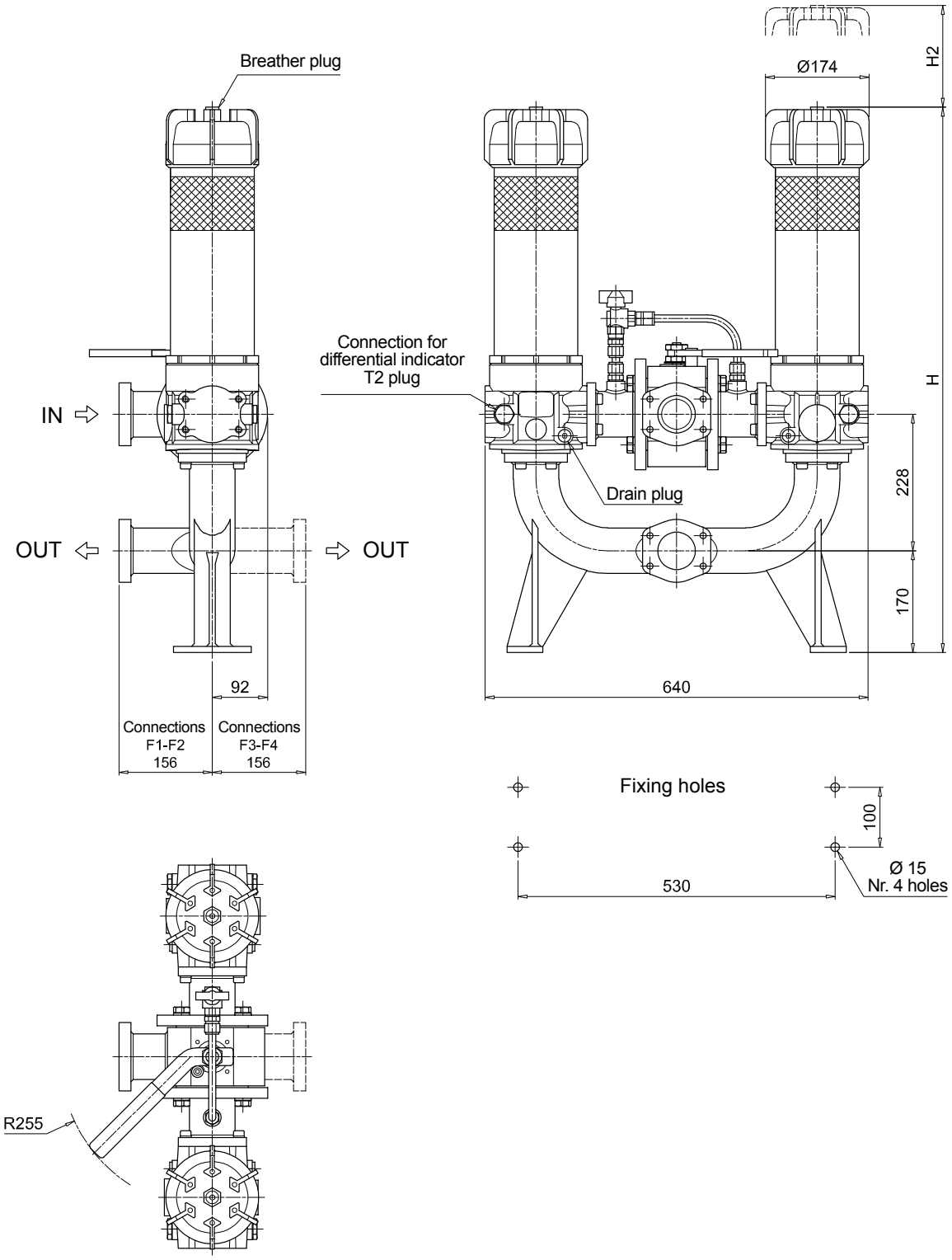

Order number for spare parts

LMD 400

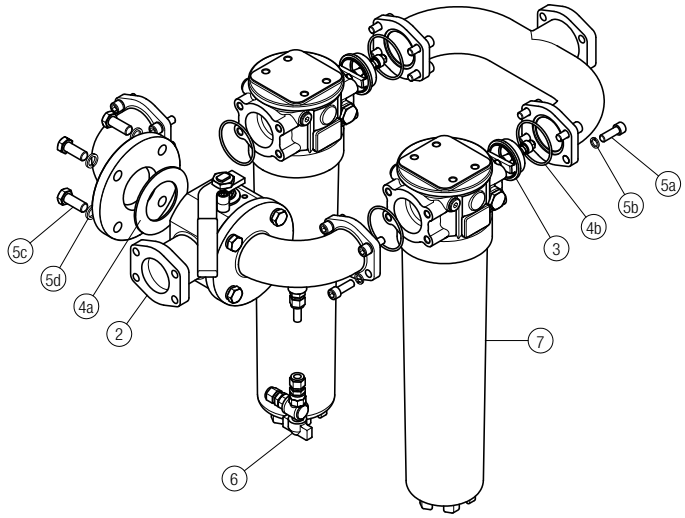

LMD 401

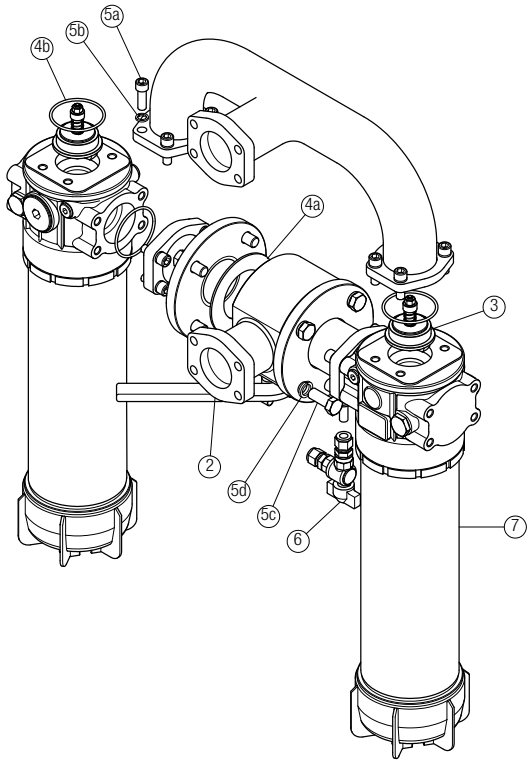

LMD 431

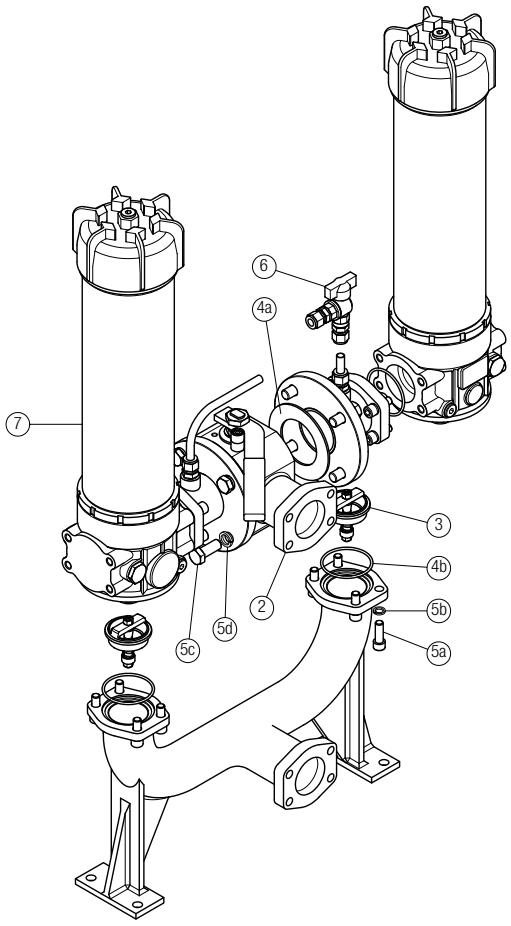

Item:	Q.ty: 1 pc. 2		Q.ty: 2 pcs. 3	Q.ty: 1 pc. 4 (4a ÷ 4b)	Q.ty: 1 pc. 5 (5a ÷ 5d)	Q.ty: 1 pc. 6	Q.ty: 2 pcs. 7
Filter series	**3-way ball valve PN 16** 2 1/2" SAE 3000 psi/M	2 1/2" SAE 3000 psi/UNC	**One-way valve**	**Seal Kit**	**Threaded fasteners kit**	**Kit ball valve with hose fitting**	**Filter** See order table
LMD 400-401-431	02001440	02001441	02001429	02050399	02049062	02025043	LMP400xF2.....

LMD 951 series

Maximum working pressure up to 1.6 MPa (16 bar) - Flow rate up to 1200 l/min



LMD 951 GENERAL INFORMATION

Description

Low & Medium Pressure filters

Duplex
Maximum working pressure up to 1.6 MPa (16 bar)
Flow rate up to 1200 l/min

LMD950 is a range of versatile low pressure duplex filter with integrated changeover function to allow the filter element replacement without the system shut-down.
They are directly connected to the lines of the system through the hydraulic fittings.

Available features:
- Flanged connections up to 4", for a maximum flow rate of 1200 l/min
- Base-mounting design, for ease of the replacement of the filter element
- Fine filtration rating, to get a good cleanliness level into the system
- Water removal elements, to remove the free water from the hydraulic fluid. For further information, see the Contamination Management document and the dedicate leaflet.
- Balancing valve, to equalize the housing pressure before the switch
- Bypass valve, to relieve excessive pressure drop across the filter media
- Drain ports, to remove the fluid from the housing prior the maintenance work
- Visual, electrical and electronic differential clogging indicators

Common applications:
- Systems where shut-down causes high costs
- Systems where shut-down causes safety issues

Technical data

Filter housing materials
- Head: Anodized Aluminium
- Housing: Anodized Aluminium
- Manifolds: Welded - Painted black
- Bypass valve: Steel
- 3-way ball valve: Steel body - Stainless Steel ball
- Check valve: Cast Iron body - AISI 304 leaf

Pressure
- SAE + DIN Flange
- Test pressure: 2.5 MPa (25 bar)

Bypass valve
- Opening pressure 350 kPa (3.5 bar) ±10%
- Other opening pressures on request.

Number of filter elements
LMD 951: 2 filter elements CU950-3

Δp element type
- Microfibre filter elements - series N: 20 bar
- Fluid flow through the filter element from OUT to IN

Seals
FPM series V

Temperature
From -25° C to +110° C

Connections
- LMD 951: In-line Inlet/Outlet
- Same side

Note
LMD 951 filters
are provided
for vertical mounting



Weights [kg] and volumes [dm³]

Filter series	Weights [kg]		Volumes [dm³]	
	DN 80	DN 100	DN 80	DN 100
LMD 951	102	130	62	66

FILTER ASSEMBLY SIZING
Flow rates [l/min]

Filter series	Length	Filter element design - N Series					
		A03	A06	A10	A16	A25	M25 M60 M90 M250
LMD 951	**3**	853	884	995	1066	1096	1233

Maximum flow rate for a complete low and medium pressure filter with a pressure drop Δp = 0.7 bar.
The reference fluid has a kinematic viscosity of 30 mm^2/s (cSt) and a density of 0.86 kg/dm^3.
For different pressure drop or fluid viscosity we recommend to use our selection software available on www.mpfiltri.com.
You can also calculate the right size using the formulas present on the FILTER SIZING paragraph at the beginning of the full catalogue or at the beginning of the filter family brochure.
Please, contact our Sales Department for further additional information.

Hydraulic symbols

Filter series	Execution S	Execution B
LMD 951	•	•

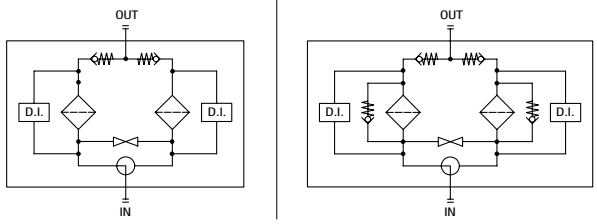

Pressure drop

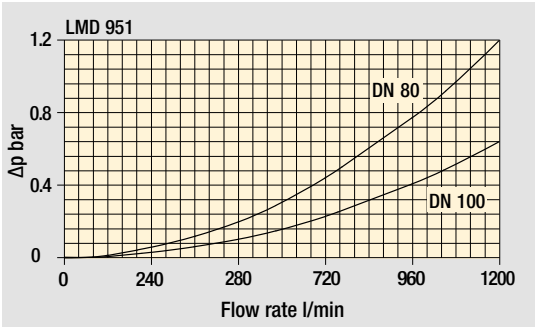

Filter housings
Δp pressure drop

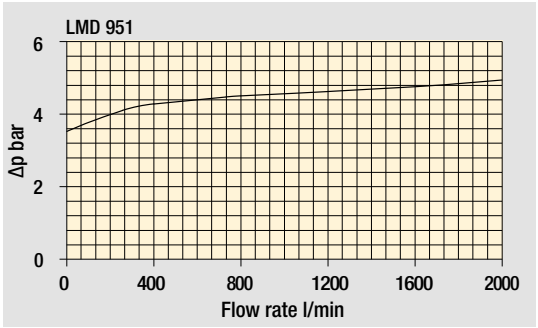

Bypass valve
pressure drop

The curves are plotted using mineral oil with density of 0.86 kg/dm^3 in compliance with ISO 3968. Δp varies proportionally with density.

Focus on

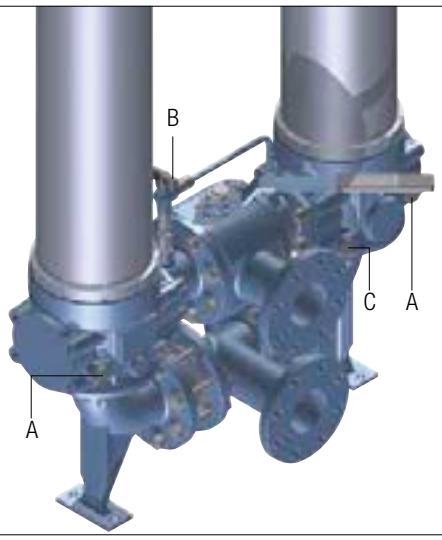

LMD 951
Fit one differential indicator
for individual filter assembly.

A	Indicator port Plug T2 - A/F 30
B	Compensation valve
C	Oil drain plug G 1/2" - A/F 10

Execution P02

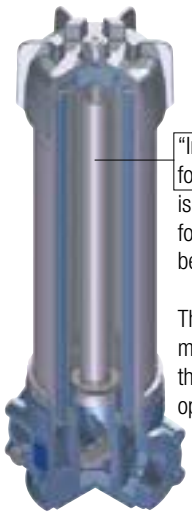

"Internal tube
for reduced flow rate"
is recommended
for flow rate values
below 100/150 l/min.

The use of option P02
makes it easier to fill
the housing with the
operating fluid.

LMD 951

Designation & Ordering code

COMPLETE FILTER

Configuration example: LMD951 | 3 | B | V | F1 | A10 | N | P01

Series and size
LMD951

Length
3

Bypass valve
S Without bypass
B 3.5 bar

Seals and treatments
V FPM

Connections
F1 3" SAE 3000 psi/M
F2 3" SAE 3000 psi/UNC
F3 4" SAE 3000 psi/M
F4 4" SAE 3000 psi/UNC
F5 3" SAE 3000 psi/M, In-line connections
F6 3" SAE 3000 psi/UNC, In-line connections
F7 4" SAE 3000 psi/M, In-line connections
F8 4" SAE 3000 psi/UNC, In-line connections

Filtration rating (filter media)
A03 Inorganic microfiber 3 µm
A06 Inorganic microfiber 6 µm
A10 Inorganic microfiber 10 µm
A16 Inorganic microfiber 16 µm
A25 Inorganic microfiber 25 µm
M25 Wire mesh 25 µm
M60 Wire mesh 60 µm
M90 Wire mesh 90 µm

WA025 Water absorber inorganic microfiber 25 µm

Element Δp
N 20 bar

Execution
P01 MP Filtri standard
P02 With internal tube for reduced flow rate
Pxx Customized

FILTER ELEMENT

Configuration example: CU950 | 3 | A10 | V | N | P01

Element series and size
CU950

Element length
3

Filtration rating (filter media)
A03 Inorganic microfiber 3 µm
A06 Inorganic microfiber 6 µm
A10 Inorganic microfiber 10 µm
A16 Inorganic microfiber 16 µm
A25 Inorganic microfiber 25 µm
M25 Wire mesh 25 µm
M60 Wire mesh 60 µm
M90 Wire mesh 90 µm

WA025 Water absorber inorganic microfiber 25 µm

Seals
V FPM

Element Δp
N 20 bar

Execution
P01 MP Filtri standard
Pxx Customized

ACCESSORIES

Differential indicators

		page
DEA	Electrical differential indicator	445
DEM	Electrical differential indicator	445-446
DLA	Electrical / visual differential indicator	446-447
DLE	Electrical / visual differential indicator	447
DTA	Electronic differential indicator	448
DVA	Visual differential indicator	448
DVM	Visual differential indicator	448

Additional features

		page
T2	Plug	449

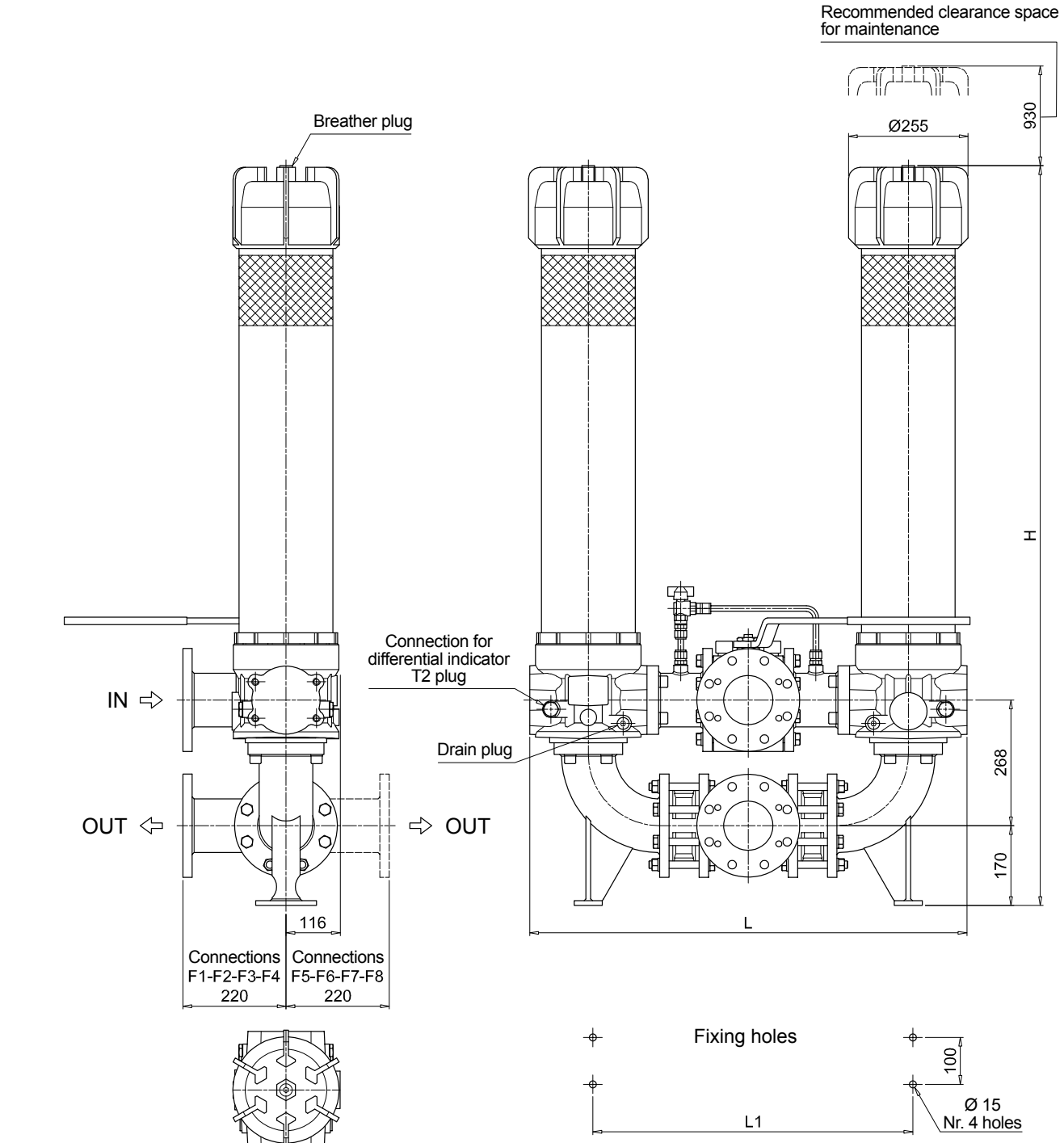

LMD951				
Connections	**H [mm]**	**L [mm]**	**L1 [mm]**	**M [mm]**
F1	1530	838	588	370
F2	1530	838	588	370
F3	1577	932	682	650
F4	1577	932	682	650
F5	1530	838	588	370
F6	1530	838	588	370
F7	1577	932	682	650
F8	1577	932	682	650

LMD 951 SPARE PARTS

Order number for spare parts

LMD 951

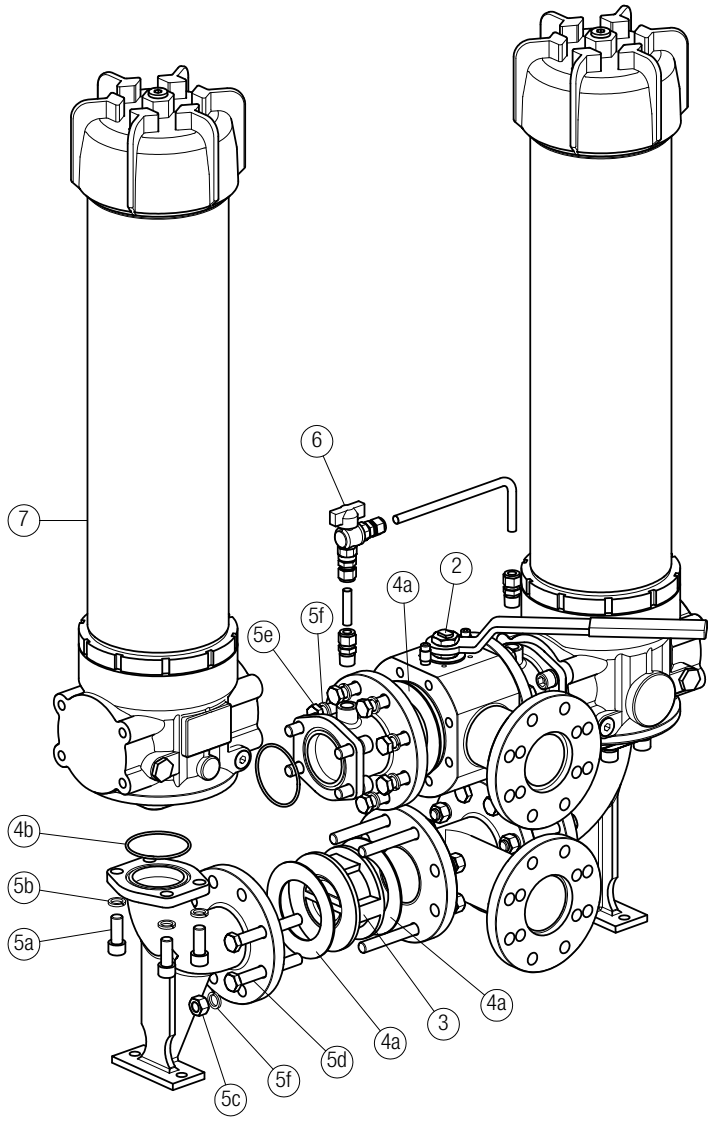

Item 7:
for complete filter code and spare parts, see LMP 950 - 951 series chapter

Quantity:
- filter spare parts: 2 pcs.
- filter seal kit: 2 pcs.

Item:	Q.ty: 1 pc. 2		Q.ty: 2 pcs. 3	Q.ty: 1 pc. 4	Q.ty: 1 pc. 5 (5a ÷ 5f)	Q.ty: 1 pc. 6	Q.ty: 2 pcs. 7
Filter series LMD 951	**3-way ball valve PN 16**		**One-way valve**	**Seal Kit**	**Threaded fasteners kit**	**G 1/2" Ball Valve Kit with straight fittings**	**Filter**
F1 - F2 - F5 - F6 / D1 - D3 (3" SAE / DIN PN16 DN 80)	3" SAE 3000 psi/M 02001135	3" SAE 3000 psi/UNC 02001438	02001418	02050388	02049056	02025043	LMP9513xVF1xxxNP01
F3 - F4 - F7 - F8 / D2 - D4 (4" SAE / DIN PN16 DN 100)	4" SAE 3000 psi/M 02001162	4" SAE 3000 psi/UNC 02001439	02001419	02050389	02049057		LMP9513xVF3xxxNP01

DIN 24550

Filter element according to DIN 24550

LDP & LDD series

Maximum working pressure up to 6 MPa (60 bar) - Flow rate up to 360 l/min

LMP 900-901 series

Maximum working pressure up to 3 MPa (30 bar) - Flow rate up to 2000 l/min

LMP 902-903 series

Maximum working pressure up to 2 MPa (20 bar) - Flow rate up to 3000 l/min

LDP & LDD series

Filter element according to DIN 24550

Maximum working pressure up to 6 MPa (60 bar) - Flow rate up to 360 l/min

LDP & LDD GENERAL INFORMATION

Filter element according to DIN 24550

Descriptions

Low & Medium Pressure filters

Maximum working pressure up to 6 MPa (60 bar)
Flow rate up to 360 l/min

LDP is a range of versatile low pressure filter for transmission, protection of sensitive components in low pressure hydraulic systems and filtration of the coolant into the machine tools.
They are also suitable for the off-line filtration of small reservoirs.
They are directly connected to the lines of the system through the hydraulic fittings.

Available features:
- Female threaded connections up to 1 1/2", for a maximum return flow rate of 360 l/min
- Filter element designed in accordance with DIN 24550 regulation
- Fine filtration rating, to get a good cleanliness level into the system
- Water removal elements, to remove the free water from the hydraulic fluid. For further information, see the Contamination Management document and the dedicate leaflet.
- Bypass valve, to relieve excessive pressure drop across the filter media
- Visual, electrical and electronic differential clogging indicators

Common applications:
Delivery lines, in low pressure industrial equipment or mobile machines

LDD is a range of versatile low pressure duplex filter with integrated changeover function to allow the filter element replacement without the system shut-down.
They are directly connected to the lines of the system through the hydraulic fittings.

Available features:
- Female threaded connections up to 1 1/2" and flanged connections up to 1 1/2", for a maximum flow rate of 360 l/min
- Filter element designed in accordance with DIN 24550 regulation
- Fine filtration rating, to get a good cleanliness level into the system
- Water removal elements, to remove the free water from the hydraulic fluid. For further information, see the Contamination Management document and the dedicate leaflet.
- Balancing valve integrated in the changeover lever, to equalize the housing pressure before the switch
- Bypass valve, to relieve excessive pressure drop across the filter media
- Vent ports, to avoid air trapped into the filter going into the system
- Drain ports, to remove the fluid from the housing prior the maintenance work
- Optional sampling ports, to get samples of fluid or to connect additional instrument to the system
- Visual, electrical and electronic differential clogging indicators

Common applications:
- Systems where shut-down causes high costs
- Systems where shut-down causes safety issues

Technical data

Filter housing materials
- Head: Aluminium
- Bowl: Cataphoretic Painted Steel
- Bypass valve: AISI 304 - Nylon

Pressure
- Test pressure: 9 MPa (90 bar)
- Burst pressure: 21 MPa (210 bar)
- Pulse pressure fatigue test: 1 000 000 cycles with pressure from 0 to 6 MPa (60 bar)

Bypass valve
- Opening pressure 350 kPa (3.5 bar) ±10%
- Other opening pressures on request.

Δp element type
- Microfibre filter elements - series N: 20 bar
- Fluid flow through the filter element from OUT to IN

Seals
- Standard NBR series A
- Optional FPM series V

Temperature
From -25° C to +110° C

Connections
Inlet/Outlet In-Line

Note
LDP - LDD filters are provided for vertical mounting



Weights [kg] and volumes [dm³]

Filter series	Weights [kg]	Volumes [dm³]
LDP 016	2.0	1.2
LDP 025	3.0	1.6
LDP 040	5.0	2.2
LDD 016	9.3	3.6
LDD 025	9.5	4.1
LDD 040	11.3	4.8

Filter element according to DIN 24550

FILTER ASSEMBLY SIZING
Flow rates [l/min]

	Filter element design - N Series										
Filter series	A03	A06	A10	A16	A25	M25	M60	M90	M250	P10	P25
LDP 016	83	91	178	198	222	350	353	358	359	295	309
LDP 025	124	134	227	245	265	357	358	358	359	319	330
LDP 040	173	191	274	284	311	359	360	361	362	332	337
LDD 016	68	73	120	130	140	189	190	192	192	169	174
LDD 025	93	98	142	149	157	191	192	192	192	178	181
LDD 040	118	126	161	165	175	192	192	193	193	182	184

Maximum flow rate for a complete low and medium pressure filter with a pressure drop Δp = 0.7 bar.
The reference fluid has a kinematic viscosity of 30 mm^2/s (cSt) and a density of 0.86 kg/dm^3.
For different pressure drop or fluid viscosity we recommend to use our selection software available on www.mpfiltri.com.
You can also calculate the right size using the formulas present on the FILTER SIZING paragraph at the beginning of the full catalogue or at the beginning of the filter family brochure.
Please, contact our Sales Department for further additional information.

Hydraulic symbols

Filter series	Execution S	Execution B	Execution S	Execution B
LDP 016	•	•		
LDP 025	•	•		
LDP 040	•	•		
LDD 016			•	•
LDD 025			•	•
LDD 040			•	•

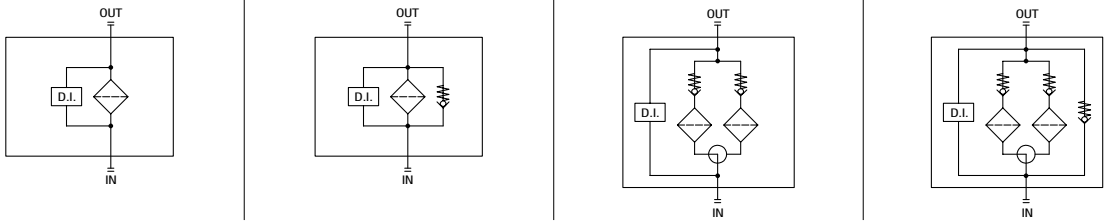

Pressure drop

Filter housings Δp pressure drop

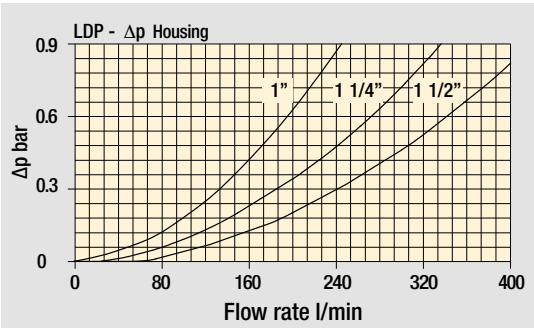

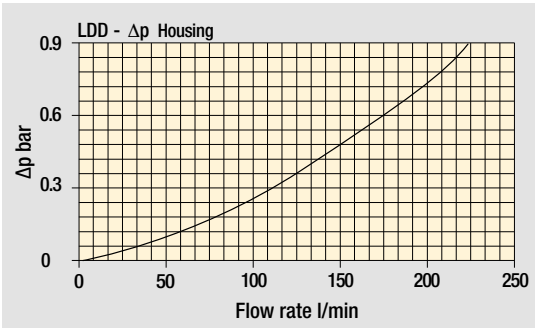

Bypass valve pressure drop

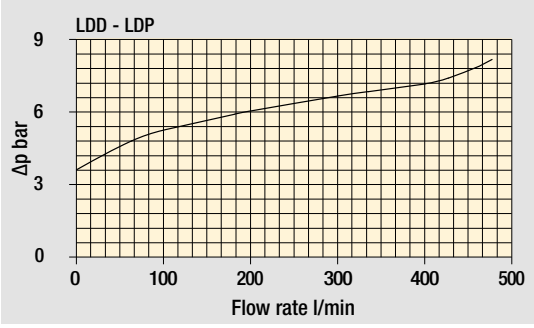

The curves are plotted using mineral oil with density of 0.86 kg/dm^3 in compliance with ISO 3968. Δp varies proportionally with density.

LDP Filter element according to DIN 24550

Designation & Ordering code

COMPLETE FILTER

Configuration example: LDP | 025 | B | A | D | 6 | A10 | N | P01

Series
LDP

Size
016 Element according to DIN 24550 - T3 DN160
025 Element according to DIN 24550 - T3 DN250
040 Element according to DIN 24550 - T3 DN400

Bypass valve
S Without bypass
B 3.5 bar

Seals and treatments (Filtration rating: Axx | Mxx | Pxx)
A NBR • • •
V FPM • • •
W NBR compatible with fluids HFA-HFB-HFC • •

Connections
A G 1”
B G 1 1/4”
C G 1 1/2”
D 1” NPT
E 1 1/4” NPT
F 1 1/2” NPT
G SAE 16 - 1 5/16” - 12 UN
H SAE 20 - 1 5/8” - 12 UN
I SAE 24 - 1 7/8” - 12 UN

Connection for differential indicator
6 With plugged connection

Filtration rating (filter media)
A03 Inorganic microfiber 3 µm
A06 Inorganic microfiber 6 µm
A10 Inorganic microfiber 10 µm
A16 Inorganic microfiber 16 µm
A25 Inorganic microfiber 25 µm
M25 Wire mesh 25 µm
M60 Wire mesh 60 µm
M90 Wire mesh 90 µm
P10 Resin impregnated paper 10 µm
P25 Resin impregnated paper 25 µm

WA025 Water absorber inorganic microfiber 25 µm

Element Δp
N 20 bar

Execution
P01 MP Filtri standard
Pxx Customized

FILTER ELEMENT

Configuration example: DN | 025 | A10 | A | N | P01

Element series
DN

Element size
016 Element according to DIN 24550 - T3 DN160
025 Element according to DIN 24550 - T3 DN250
040 Element according to DIN 24550 - T3 DN400

Filtration rating (filter media)
A03 Inorganic microfiber 3 µm
A06 Inorganic microfiber 6 µm
A10 Inorganic microfiber 10 µm
A16 Inorganic microfiber 16 µm
A25 Inorganic microfiber 25 µm
M25 Wire mesh 25 µm
M60 Wire mesh 60 µm
M90 Wire mesh 90 µm
P10 Resin impregnated paper 10 µm
P25 Resin impregnated paper 25 µm

WA025 Water absorber inorganic microfiber 25 µm

Seals (Filtration rating: Axx | Mxx | Pxx)
A NBR • • •
V FPM • • •
W NBR compatible with fluids HFA-HFB-HFC • •

Element Δp
N 20 bar

Execution
P01 MP Filtri standard
Pxx Customized

ACCESSORIES

Differential indicators

		page
DEA	Electrical differential indicator	445
DEM	Electrical differential indicator	445-446
DLA	Electrical / visual differential indicator	446-447
DLE	Electrical / visual differential indicator	447
DTA	Electronic differential indicator	448
DVA	Visual differential indicator	448
DVM	Visual differential indicator	448

Additional features

		page
T2	Plug	449

Dimensions

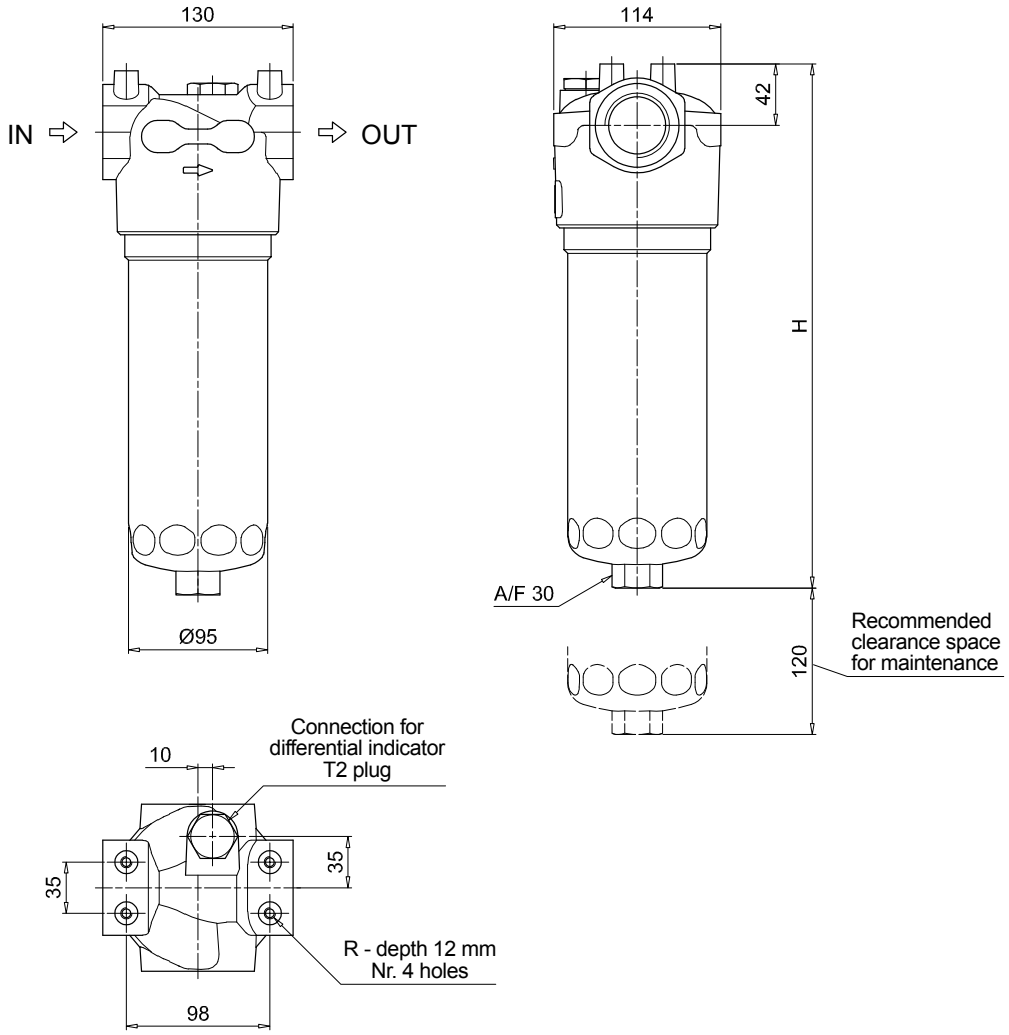

LDP	
Filter size	**H [mm]**
016	268
025	358
040	508

Connections	R
A-B-C	M8
D-E-F-G-H-I	5/16" UNC

LDD Filter element according to DIN 24550

Designation & Ordering code

COMPLETE FILTER

Configuration example: LDD | 025 | B | A | C | 6 | A10 | N | P01

Series

LDD

Size

016 Element according to DIN 24550 - T3 DN160
025 Element according to DIN 24550 - T3 DN250
040 Element according to DIN 24550 - T3 DN400

Bypass valve

S Without bypass
B 3.5 bar

Seals and treatments

		Filtration rating Axx	Mxx	Pxx
A	NBR	•	•	•
V	FPM	•	•	•
W	NBR compatible with fluids HFA-HFB-HFC	•	•	

Connections

C G 1 1/2”
F 1 1/2” NPT
I SAE 24 - 1 7/8” - 12 UN
L 1 1/2” SAE 3000 psi/M + G 1 1/4”
M 1 1/2” SAE 3000 psi/UNC + 1 1/4” NPT
N 1 1/2” SAE 3000 psi/UNC + SAE 20 - 1 5/8” UN

Connection for differential indicator

6 With plugged connection

Filtration rating (filter media)

A03 Inorganic microfiber 3 µm
A06 Inorganic microfiber 6 µm
A10 Inorganic microfiber 10 µm
A16 Inorganic microfiber 16 µm
A25 Inorganic microfiber 25 µm
M25 Wire mesh 25 µm
M60 Wire mesh 60 µm
M90 Wire mesh 90 µm
P10 Resin impregnated paper 10 µm
P25 Resin impregnated paper 25 µm

WA025 Water absorber inorganic microfiber 25 µm

Element Δp

N 20 bar

Execution

P01 MP Filtri standard
Pxx Customized

FILTER ELEMENT

Configuration example: DN | 025 | A10 | A | N | P01

Element series

DN

Element size

016 Element according to DIN 24550 - T3 DN160
025 Element according to DIN 24550 - T3 DN250
040 Element according to DIN 24550 - T3 DN400

Filtration rating (filter media)

A03 Inorganic microfiber 3 µm
A06 Inorganic microfiber 6 µm
A10 Inorganic microfiber 10 µm
A16 Inorganic microfiber 16 µm
A25 Inorganic microfiber 25 µm
M25 Wire mesh 25 µm
M60 Wire mesh 60 µm
M90 Wire mesh 90 µm
P10 Resin impregnated paper 10 µm
P25 Resin impregnated paper 25 µm

WA025 Water absorber inorganic microfiber 25 µm

Seals

		Filtration rating Axx	Mxx	Pxx
A	NBR	•	•	•
V	FPM	•	•	•
W	NBR compatible with fluids HFA-HFB-HFC	•	•	

Element Δp

N 20 bar

Execution

P01 MP Filtri standard
Pxx Customized

ACCESSORIES

Differential indicators

		page
DEA	Electrical differential indicator	445
DEM	Electrical differential indicator	445-446
DLA	Electrical / visual differential indicator	446-447
DLE	Electrical / visual differential indicator	447
DTA	Electronic differential indicator	448
DVA	Visual differential indicator	448
DVM	Visual differential indicator	448

Additional features

		page
T2	Plug	449

LDD	
Filter size	**H [mm]**
016	293
025	383
040	533

Connections	**R**
C	M10
F - I	3/8" UNC
L	M10
M - N	3/8" UNC

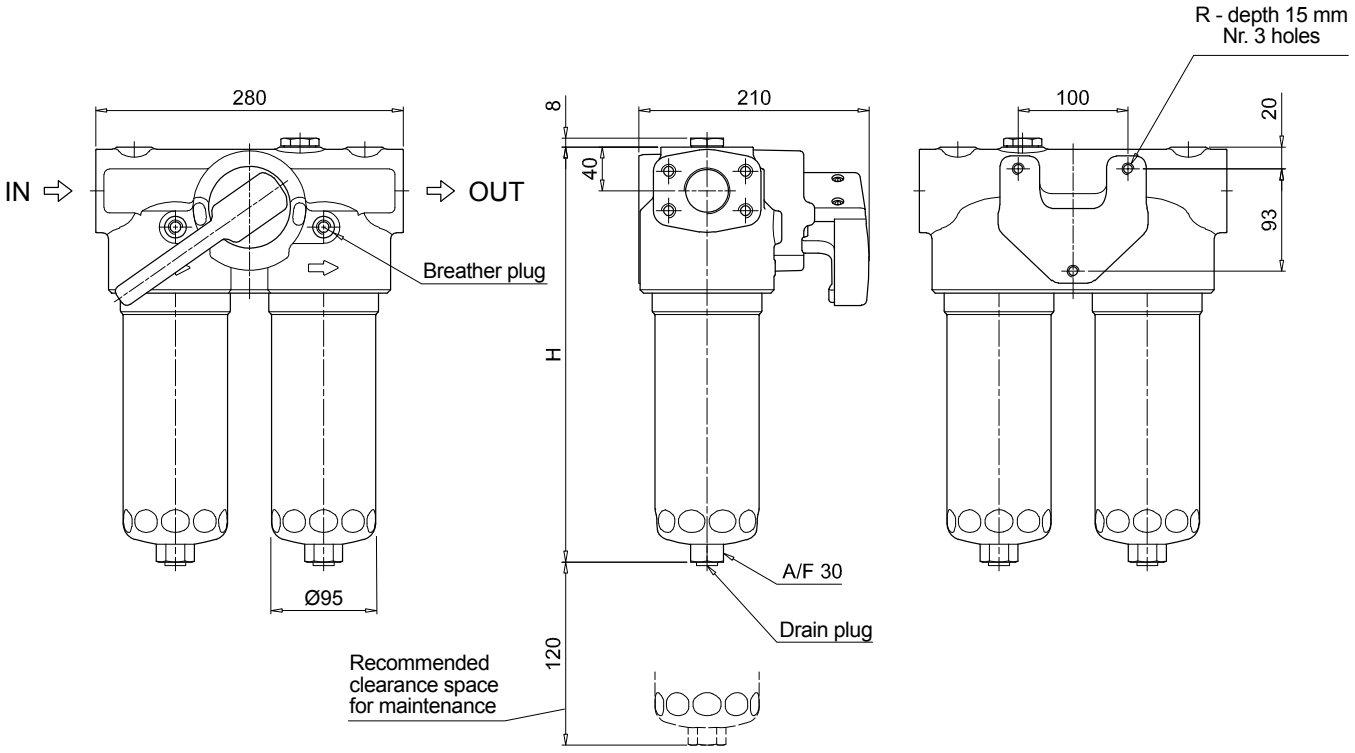

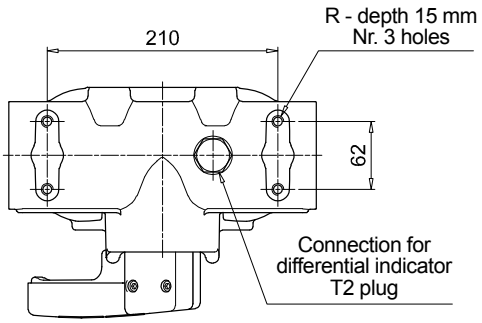

Filter element according to DIN 24550

Order number for spare parts

LDP

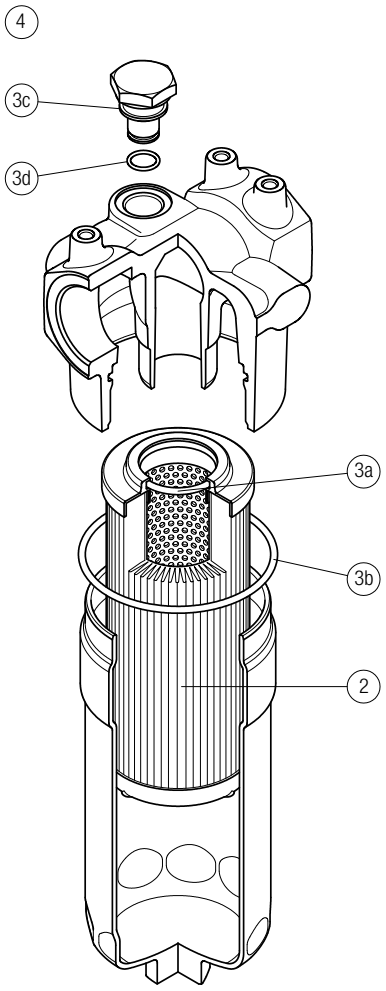

Item:	Q.ty: 1 pc. 2	Q.ty: 1 pc. 3 (3a ÷ 3d)		Q.ty: 1 pc. 4	
Filter series	Filter element	Seal Kit code number NBR	FPM	Indicator connection plug NBR	FPM
LDP	See order table	02050435	02050436	T2H	T2V

Filter element according to DIN 24550

Order number for spare parts

LDD

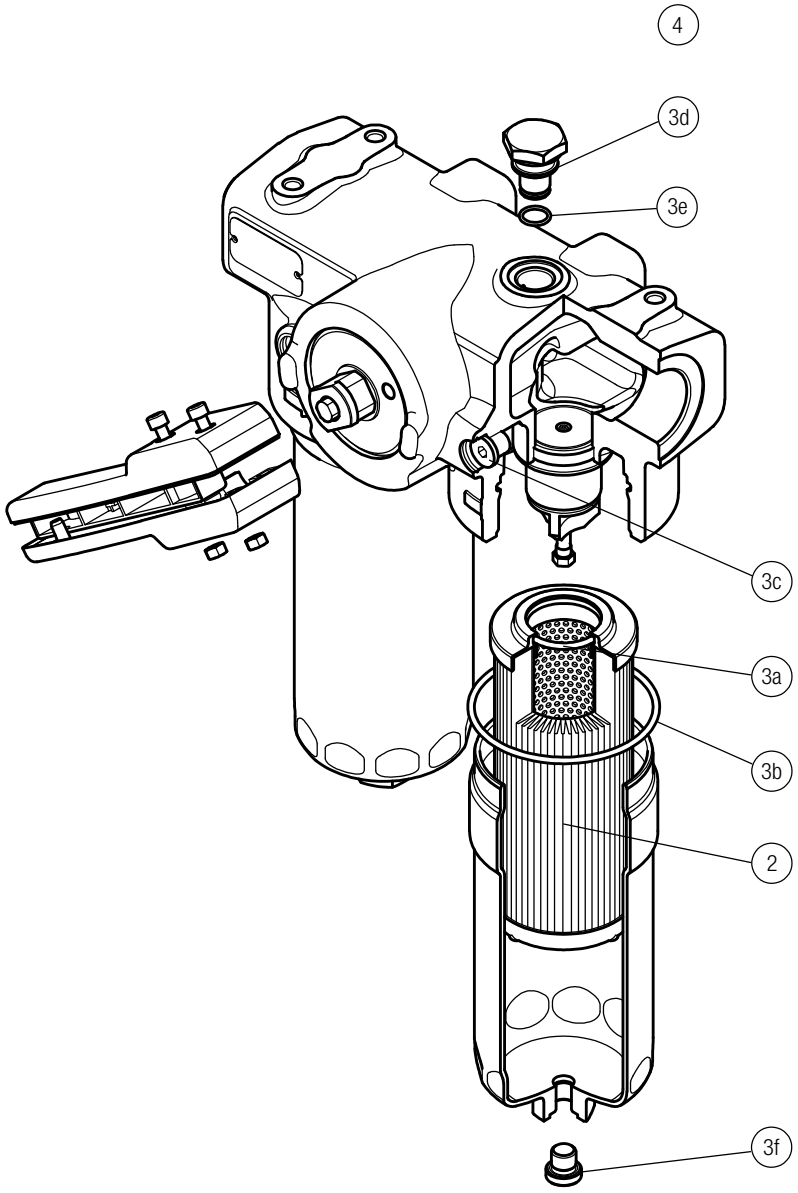

Item:	Q.ty: 1 pc. 2	Q.ty: 1 pc. 3 (3a ÷ 3i)		Q.ty: 2 pc. 4	
Filter series	**Filter element**	**Seal Kit code number NBR**	**FPM**	**Indicator connection plug NBR**	**FPM**
LDD	See order table	02050671	02050672	T2H	T2V

LMP 900-901 series

Filter element according to DIN 24550

Maximum working pressure up to 3 MPa (30 bar) - Flow rate up to 2000 l/min



LMP 900-901 GENERAL INFORMATION

Filter element according to DIN 24550

Description

Low & Medium Pressure filters

Maximum working pressure up to 3 MPa (30 bar)
Flow rate up to 2000 l/min

LMP900 is a range of low pressure filter with large filtration surface mainly suitable for lubrication, off-line filtration of the reservoirs and filtration equipment.
They are directly connected to the lines of the system through the hydraulic fittings.

Available features:
- Flanged connections up to 4", for a maximum flow rate of 2000 l/min
- In line or 90° connections, to meet any type of application
- Filter element designed in accordance with DIN 24550 regulation
- Fine filtration rating, to get a good cleanliness level into the system
- Water removal elements, to remove the free water from the hydraulic fluid. For further information, see the Contamination Management document and the dedicate leaflet.
- Bypass valve, to relieve excessive pressure drop across the filter media
- Vent ports, to avoid air trapped into the filter going into the system
- Drain ports, to remove the fluid from the housing prior the maintenance work
- Visual, electrical and electronic differential clogging indicators

Common applications:
- Off-line filtration of reservoirs
- Filtration systems
- Lubrication systems

Technical data

Filter housing materials
- Head: Anodized Aluminium
- Housing: Anodized Aluminium
- Manifolds: Anodized Aluminium
- Bypass valve: Steel

Pressure
- Test pressure: 4.5 MPa (45 bar)
- Burst pressure: 12 MPa (120 bar)
- Pulse pressure fatigue test: 1 000 000 cycles with pressure from 0 to 3 MPa (30 bar)

Bypass valve
- Opening pressure 350 kPa (3.5 bar) ±10%
- Other opening pressures on request.

Number of filter elements
LMP 900-1: 1 filter element CU900
LMP 900-2: 2 filter elements CU900

Filter elements
Filter element according to DIN 24550
Size: 1000

Δp element type
- Microfibre filter elements - series N: 20 bar
- Fluid flow through the filter element from OUT to IN

Connections
LMP 900: In-line Inlet/Outlet
LMP 901: 90° Inlet/Outlet

Seals
- Standard NBR series A
- Optional FPM series V

Temperature
From -25 °C to +110 °C

Note
LMP 900 - 901 filters are provided for vertical mounting



Weights [kg] and volumes [dm³]

Filter series	Weights [kg]			Volumes [dm³]		
	Length	1	2	Length	1	2
LMP 900-901		19.2	30.4		16	24

Filter element according to DIN 24550

FILTER ASSEMBLY SIZING
Flow rates [l/min]

Filter series	Length	Filter element design - N Series					
		A03	A06	A10	A16	A25	M25 M60 M90 M250
LMP 900	**1**	706	877	1264	1291	1444	1803
	2	1100	1264	1556	1573	1668	1867
LMP 901	**1**	715	899	1337	1369	1552	2000
	2	1147	1337	1689	1710	1828	2081

Maximum flow rate for a complete low and medium pressure filter with a pressure drop Δp = 0.7 bar.
The reference fluid has a kinematic viscosity of 30 mm^2/s (cSt) and a density of 0.86 kg/dm^3.
For different pressure drop or fluid viscosity we recommend to use our selection software available on www.mpfiltri.com.
You can also calculate the right size using the formulas present on the FILTER SIZING paragraph at the beginning of the full catalogue or at the beginning of the filter family brochure.
Please, contact our Sales Department for further additional information.

LMP 900-901 Length 2



Hydraulic symbols

Filter series	Execution S	Execution B
LMP 900-901	•	•

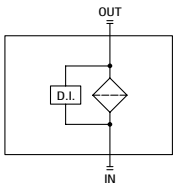

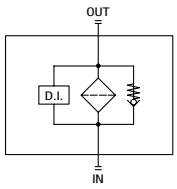

Pressure drop
Filter housings Δp pressure drop

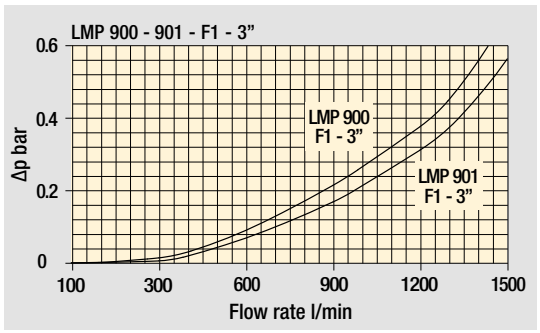

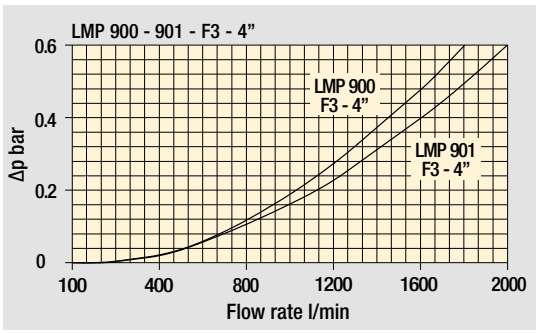

Bypass valve pressure drop

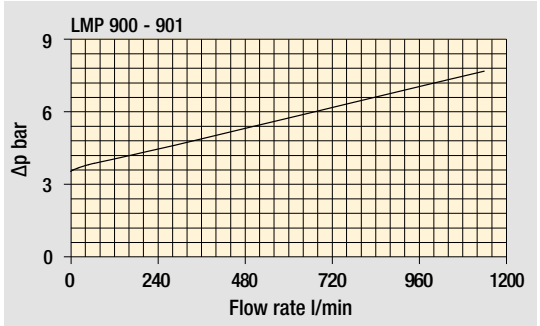

The curves are plotted using mineral oil with density of 0.86 kg/dm^3 in compliance with ISO 3968. Δp varies proportionally with density.

LMP 900-901 Filter element according to DIN 24550

Designation & Ordering code

COMPLETE FILTER

Configuration example: LMP901 | 2 | B | A | F2 | A10 | N | P01

Series and size
LMP900 | **LMP901**

Length
1 | **2**

Bypass valve
S Without bypass
B 3.5 bar

Seals and treatments
A NBR
V FPM

Connections
F1 3” SAE 3000 psi/M
F2 3” SAE 3000 psi/UNC
F3 4” SAE 3000 psi/M
F4 4” SAE 3000 psi/UNC

Filtration rating (filter media)
A03 Inorganic microfiber 3 µm
A06 Inorganic microfiber 6 µm
A10 Inorganic microfiber 10 µm
A16 Inorganic microfiber 16 µm
A25 Inorganic microfiber 25 µm
M25 Wire mesh 25 µm
M60 Wire mesh 60 µm
M90 Wire mesh 90 µm
WA025 Water absorber inorganic microfiber 25 µm

Element Δp
N 20 bar

Execution

	Filter length 1	2
P01 MP Filtri standard	•	•
P02 Maintenance from the bottom of the housing		•
Pxx Customized		

FILTER ELEMENT

Configuration example: CU900 | A10 | A | N | P01

Element series and size
CU900

Length
1 Nr. 1 filter element
2 Nr. 2 filter elements

Filtration rating (filter media)
A03 Inorganic microfiber 3 µm
A06 Inorganic microfiber 6 µm
A10 Inorganic microfiber 10 µm
A16 Inorganic microfiber 16 µm
A25 Inorganic microfiber 25 µm
M25 Wire mesh 25 µm
M60 Wire mesh 60 µm
M90 Wire mesh 90 µm
WA025 Water absorber inorganic microfiber 25 µm

Seals
A NBR
V FPM

Element Δp
N 20 bar

Execution
P01 MP Filtri standard
Pxx Customized

ACCESSORIES

Differential indicators

		page
DEA	Electrical differential indicator	445
DEM	Electrical differential indicator	445-446
DLA	Electrical / visual differential indicator	446-447
DLE	Electrical / visual differential indicator	447
DTA	Electronic differential indicator	448
DVA	Visual differential indicator	448
DVM	Visual differential indicator	448

Additional features

		Filter length 1	2	page
T2	Plug	•	•	449
CFA	Retaining clamp		•	450

Dimensions

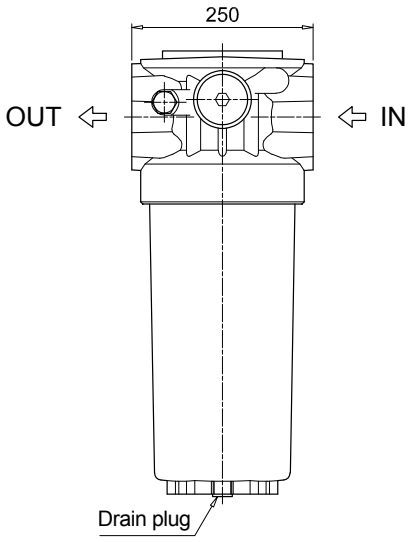

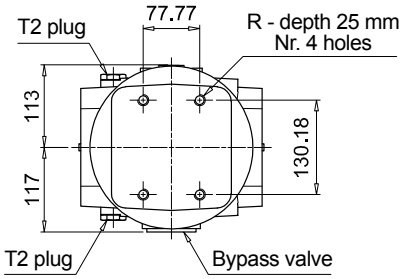

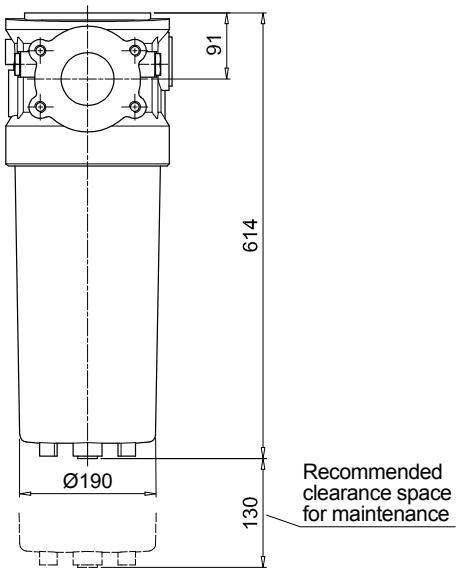

T2 plug =
connection for differential indicator

LMP900

Length 1

Connections	R
F1 - F3	M16
F2 - F4	5/8" UNC

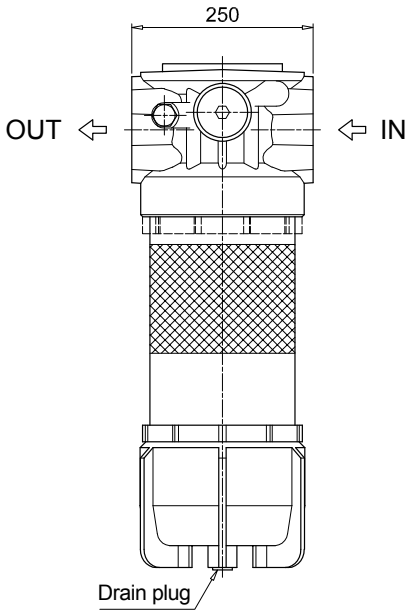

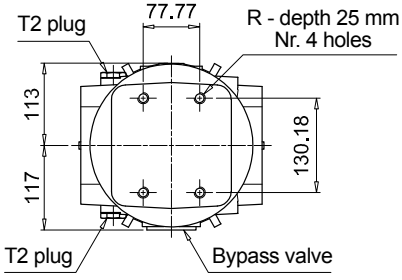

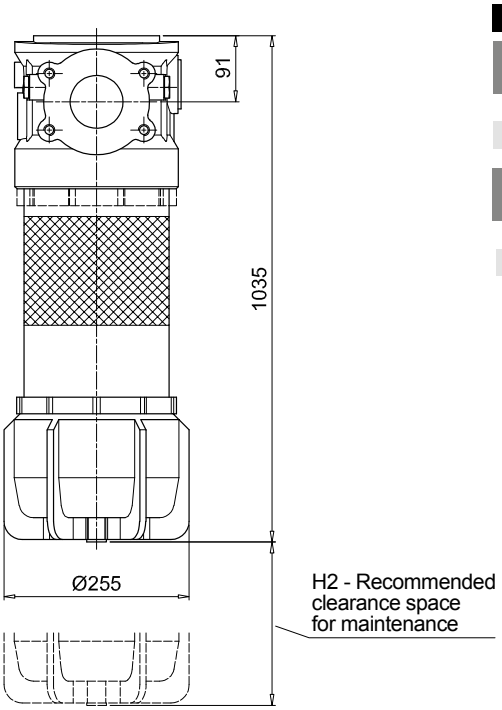

T2 plug =
connection for differential indicator

LMP900

Length 2

Execution	H2 [mm]
P01	130
P02	800

Connections	R
F1 - F3	M16
F2 - F4	5/8" UNC

LMP 900-901 Filter element according to DIN 24550

Dimensions

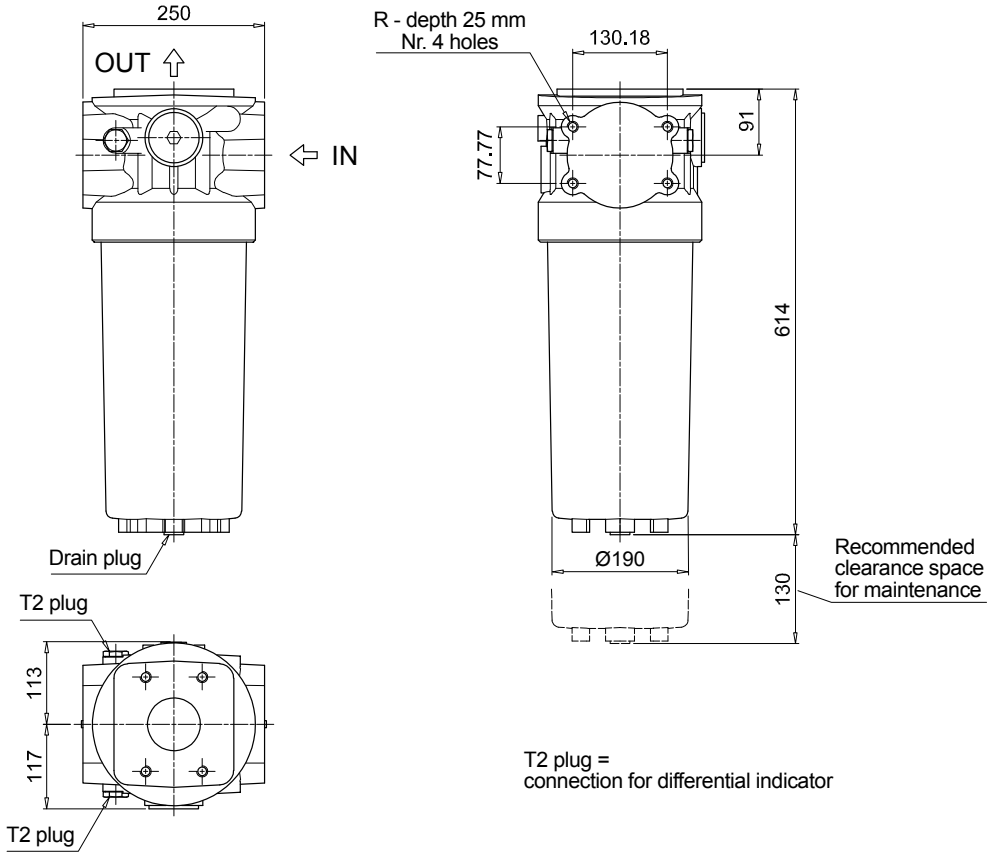

LMP901	
Length 1	
Connections	**R**
F1 - F3	M16
F2 - F4	5/8" UNC

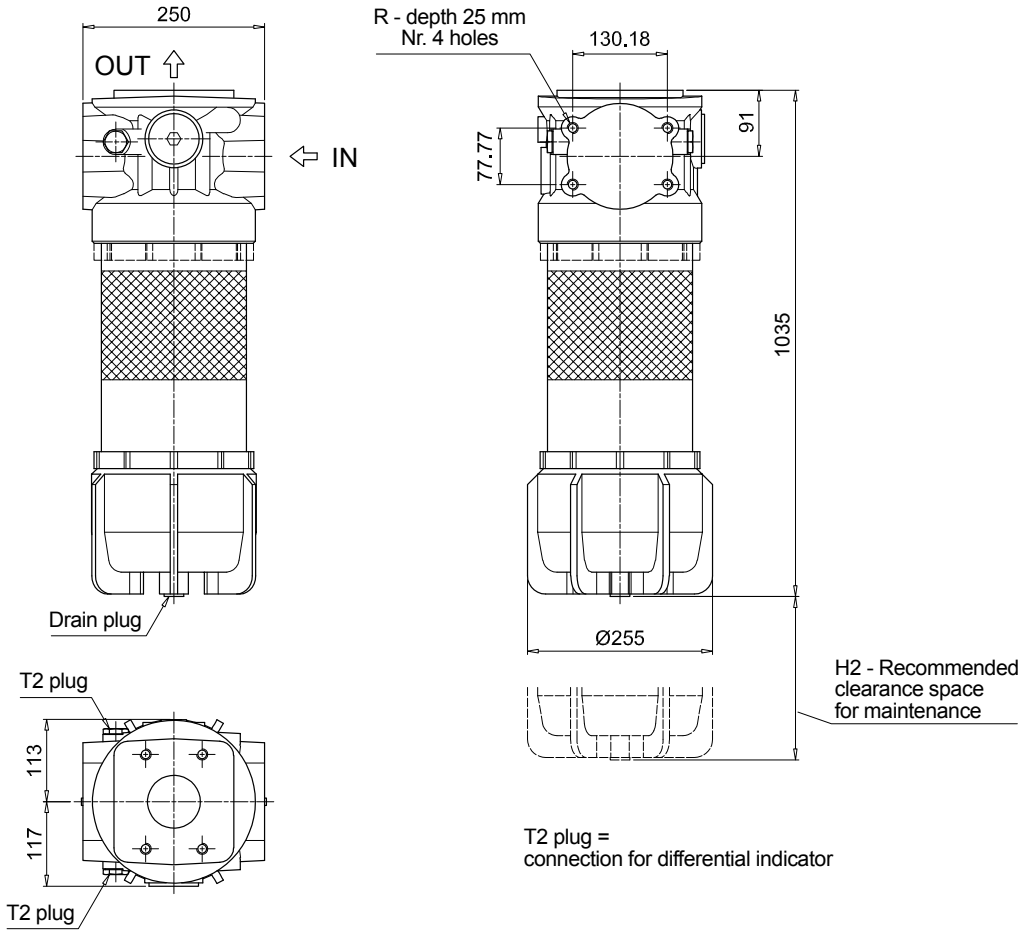

LMP901	
Length 2	
Execution	**H2 [mm]**
P01	130
P02	800

Connections	**R**
F1 - F3	M16
F2 - F4	5/8" UNC

Order number for spare parts

LMP 900 - 901
length 1

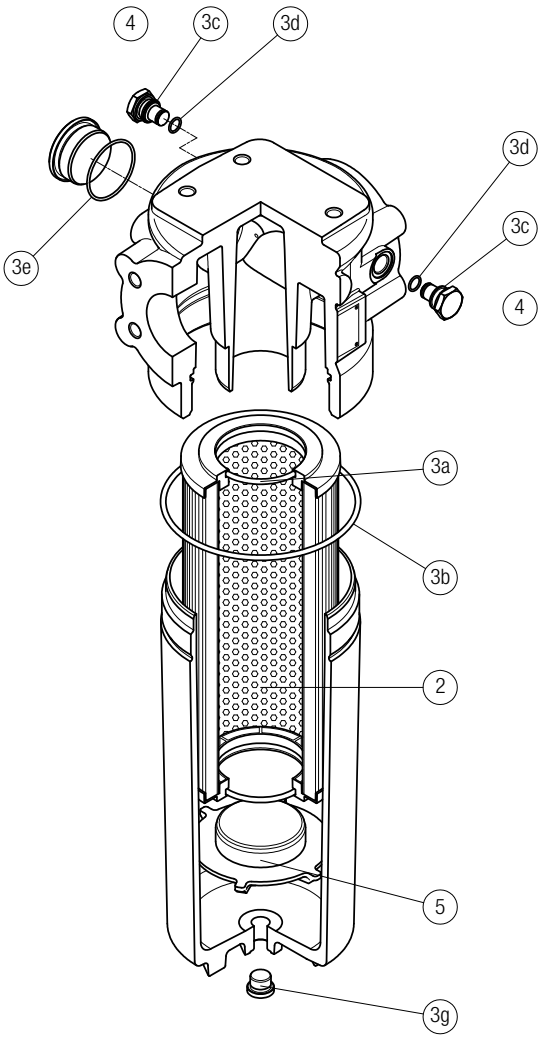

LMP 900 - 901
length 2

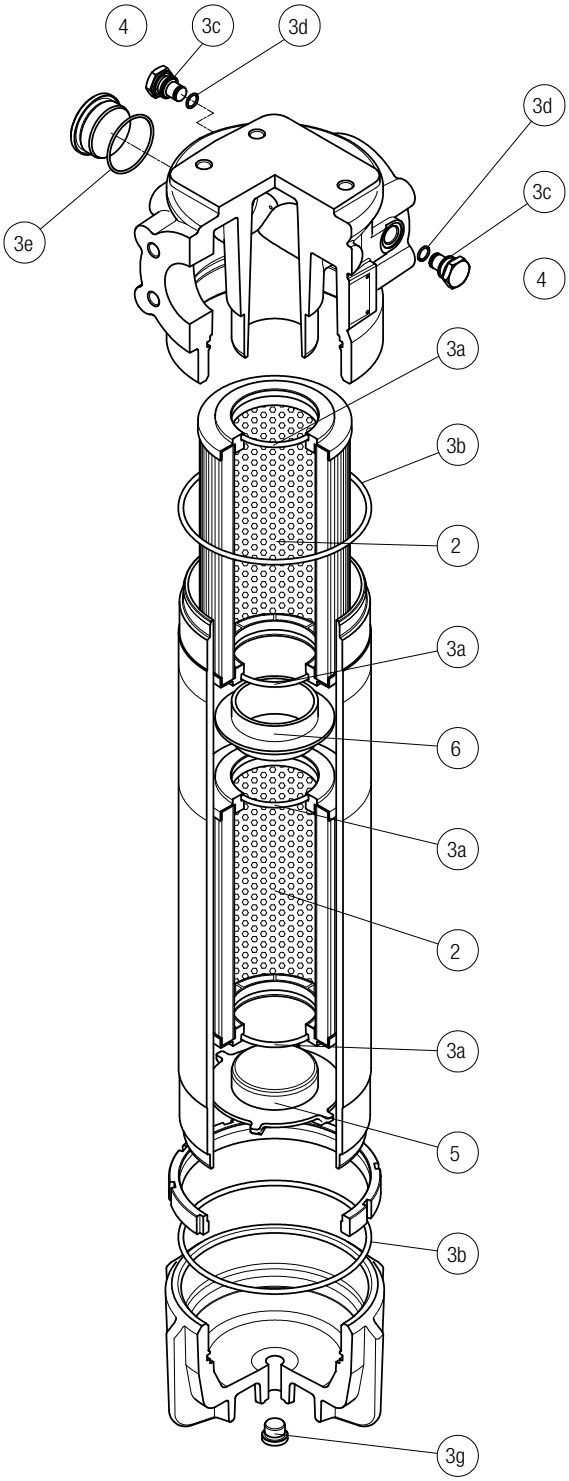

Item:	2		3 (3a ÷ 3g)			4			5		6	
Filter series	Filter element Q.ty		Seal Kit code number Q.ty	NBR	FPM	Indicator connection plug Q.ty	NBR	FPM	Housing spigot Q.ty		Coupling spigot Q.ty	
LMP 900-901 length 1	1 pc.	See order table	1 pc.	02050363	02050364	2 pcs.	T2H	T2V	1 pc.	01044104	-	01044099
LMP 900-901 length 2	2 pcs.		1 pc.	02050365	02050366	2 pcs.			1 pc.		1 pc.	

LMP 902-903 series

Filter element according to DIN 24550

Maximum working pressure up to 2 MPa (20 bar) - Flow rate up to 3000 l/min



LMP 902-903 GENERAL INFORMATION

Filter element according to DIN 24550

Description

Low & Medium Pressure filters

Maximum working pressure up to 2 MPa (20 bar)
Flow rate up to 3000 l/min

LMP902 and LMP903 are ranges of low pressure filter with large filtration surface mainly suitable for lubrication, off-line filtration of the reservoirs and filtration equipment.
Multiple LMP950 filters are connected to a manifold to reduce the pressure drop caused by the filter media and to increase the life time of the filter element.
They are directly connected to the lines of the system through the hydraulic fittings.

Available features:
- 4" flanged connections, for a maximum flow rate of 3000 l/min
- Filter element designed in accordance with DIN 24550 regulation
- Fine filtration rating, to get a good cleanliness level into the system
- Water removal elements, to remove the free water from the hydraulic fluid. For further information, see the Contamination Management document and the dedicate leaflet.
- Bypass valve, to relieve excessive pressure drop across the filter media
- Vent ports, to avoid air trapped into the filter going into the system
- Drain ports, to remove the fluid from the housing prior the maintenance work
- Visual, electrical and electronic differential clogging indicators

Common applications:
- Off-line filtration of reservoirs
- Filtration systems

Technical data

Filter housing materials
- Head: Anodized Aluminium
- Housing: Anodized Aluminium
- Manifolds: Welded - Phosphatized Steel
- Bypass valve: Steel
- Size 1000 filter elements complying with DIN 24550 standard

Pressure
- Test pressure: 3.5 MPa (35 bar)

Bypass valve
- Opening pressure 350 kPa (3.5 bar) ±10%
- Other opening pressures on request.

Number of filter elements
LMP 902: 4 filter elements CU900
LMP 903: 6 filter elements CU900

Filter elements
Filter element according to DIN 24550
Size: 1000

Δp element type
- Microfibre filter elements - series N: 20 bar
- Fluid flow through the filter element from OUT to IN

Connections
LMP 902-903: In-line Inlet/Outlet

Seals
- Standard NBR series A
- Optional FPM series V

Temperature
From -25 °C to +110 °C

Note
LMP 902 - 903 filters are provided for vertical mounting



Weights [kg] and volumes [dm³]

Filter series	Weights [kg]	Volumes [dm³]
	Length 2	Length 2
LMP 902	89.6	58
LMP 903	129.2	87

Filter element according to DIN 24550

FILTER ASSEMBLY SIZING
Flow rates [l/min]

Filter series	Length	Filter element design - N Series					
		A03	A06	A10	A16	A25	M25 M60 M90 M250
LMP 902	**2**	2217	2576	3241	3282	3506	3987
LMP 903	**2**	2838	3170	3720	3755	3926	4278

Maximum flow rate for a complete low and medium pressure filter with a pressure drop Δp = 0.7 bar.
The reference fluid has a kinematic viscosity of 30 mm^2/s (cSt) and a density of 0.86 kg/dm^3.
For different pressure drop or fluid viscosity we recommend to use our selection software available on www.mpfiltri.com.
You can also calculate the right size using the formulas present on the FILTER SIZING paragraph at the beginning of the full catalogue or at the beginning of the filter family brochure.
Please, contact our Sales Department for further additional information.

Hydraulic symbols

Filter series	Execution S	Execution B	Execution S	Execution B
LMP 902	•	•		
LMP 903			•	•

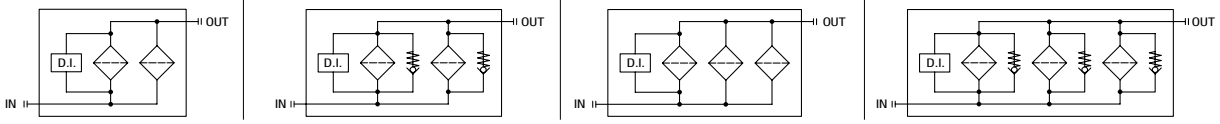

Pressure drop
Filter housings Δp pressure drop

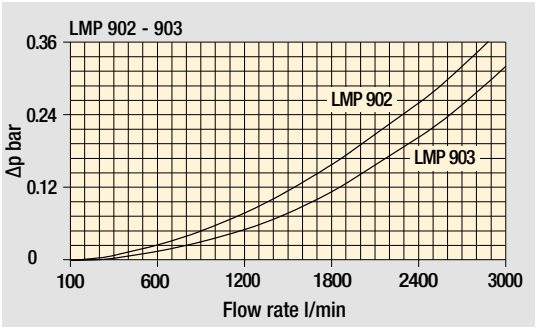

Bypass valve pressure drop

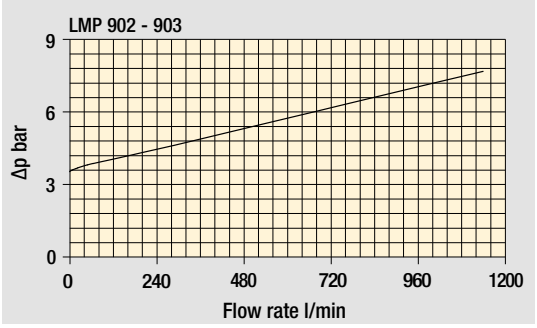

The curves are plotted using mineral oil with density of 0.86 kg/dm^3 in compliance with ISO 3968. Δp varies proportionally with density.

LMP 902-903 GENERAL INFORMATION

Filter element according to DIN 24550

Manifolds

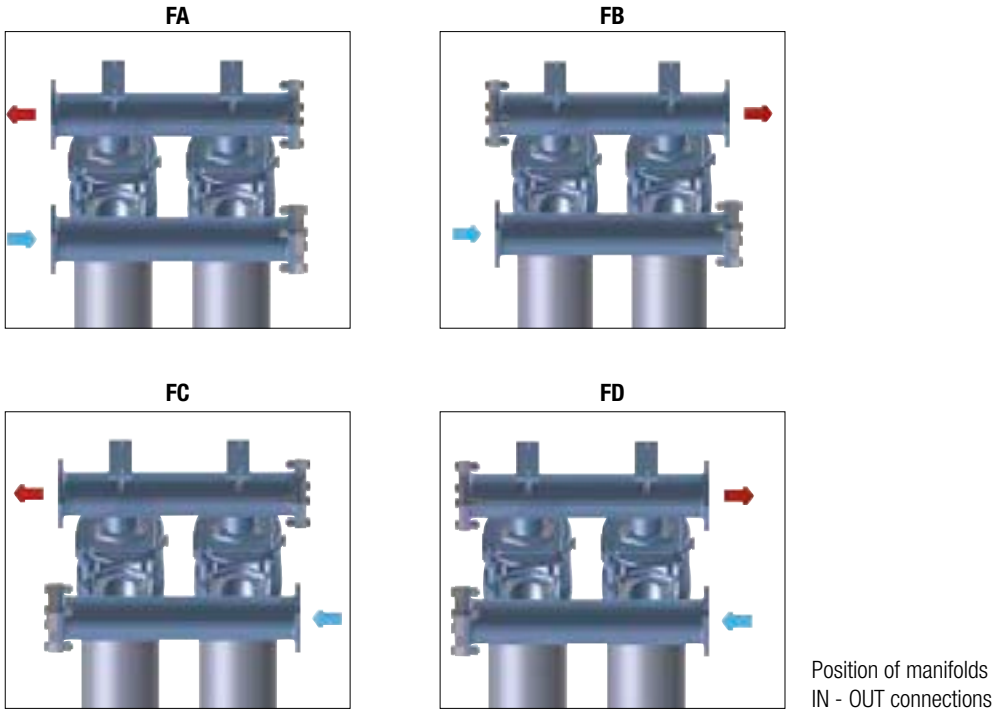

Position of manifolds
IN - OUT connections

Focus on

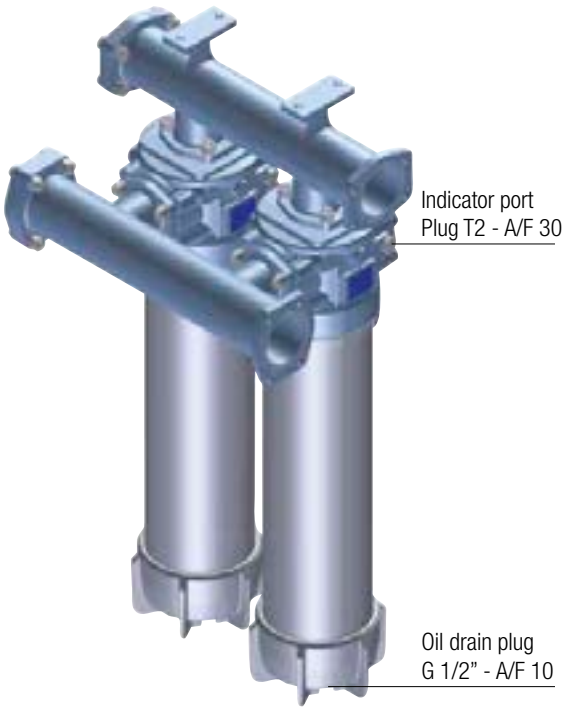

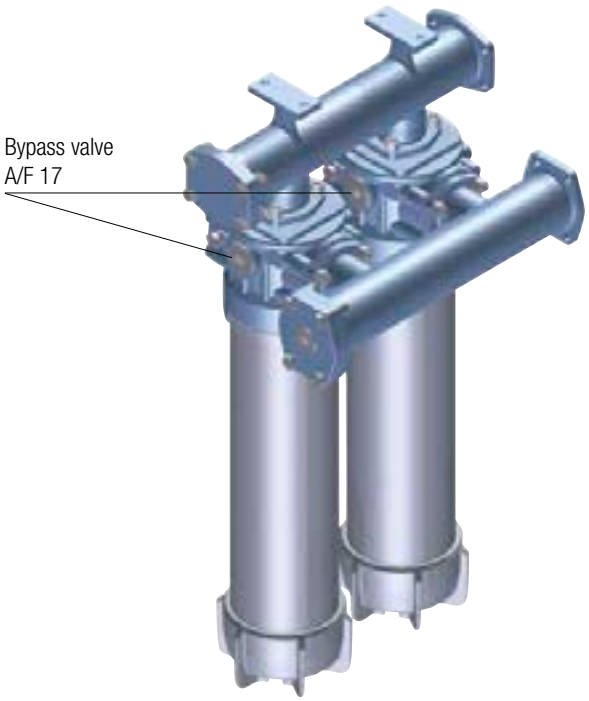

LMP 902-903 Filter element according to DIN 24550

Designation & Ordering code

COMPLETE FILTER

Configuration example: LMP902 | 2 | B | A | FA | A10 | N | P01

Series and size
LMP902 | **LMP903**

Length
2

Bypass valve

S	Without bypass	**B**	3.5 bar

Seals and treatments

A	NBR
V	FPM

Connections

		IN	OUT
FA	4” SAE 3000 psi	left	left
FB	4” SAE 3000 psi	left	right
FC	4” SAE 3000 psi	right	left
FD	4” SAE 3000 psi	right	right

Filtration rating (filter media)

A03	Inorganic microfiber 3 µm	**M25**	Wire mesh 25 µm
A06	Inorganic microfiber 6 µm	**M60**	Wire mesh 60 µm
A10	Inorganic microfiber 10 µm	**M90**	Wire mesh 90 µm
A16	Inorganic microfiber 16 µm		
A25	Inorganic microfiber 25 µm		

WA025 Water absorber inorganic microfiber 25 µm

Element Δp
N 20 bar

Execution

P01	MP Filtri standard
Pxx	Customized

FILTER ELEMENT

Configuration example: CU900 | A10 | A | N | P01

Element series and size
CU900

Filter series and size

LMP902	Nr. 4 filter elements
LMP903	Nr. 6 filter elements

Filtration rating (filter media)

A03	Inorganic microfiber 3 µm	**M25**	Wire mesh 25 µm
A06	Inorganic microfiber 6 µm	**M60**	Wire mesh 60 µm
A10	Inorganic microfiber 10 µm	**M90**	Wire mesh 90 µm
A16	Inorganic microfiber 16 µm		
A25	Inorganic microfiber 25 µm		

WA025 Water absorber inorganic microfiber 25 µm

Seals

A	NBR
V	FPM

Element Δp
N 20 bar

Execution

P01	MP Filtri standard
Pxx	Customized

ACCESSORIES

Differential indicators

		page
DEA	Electrical differential indicator	445
DEM	Electrical differential indicator	445-446
DLA	Electrical / visual differential indicator	446-447
DLE	Electrical / visual differential indicator	447
DTA	Electronic differential indicator	448
DVA	Visual differential indicator	448
DVM	Visual differential indicator	448

Additional features

		page
T2	Plug	449

Dimensions

LMP902

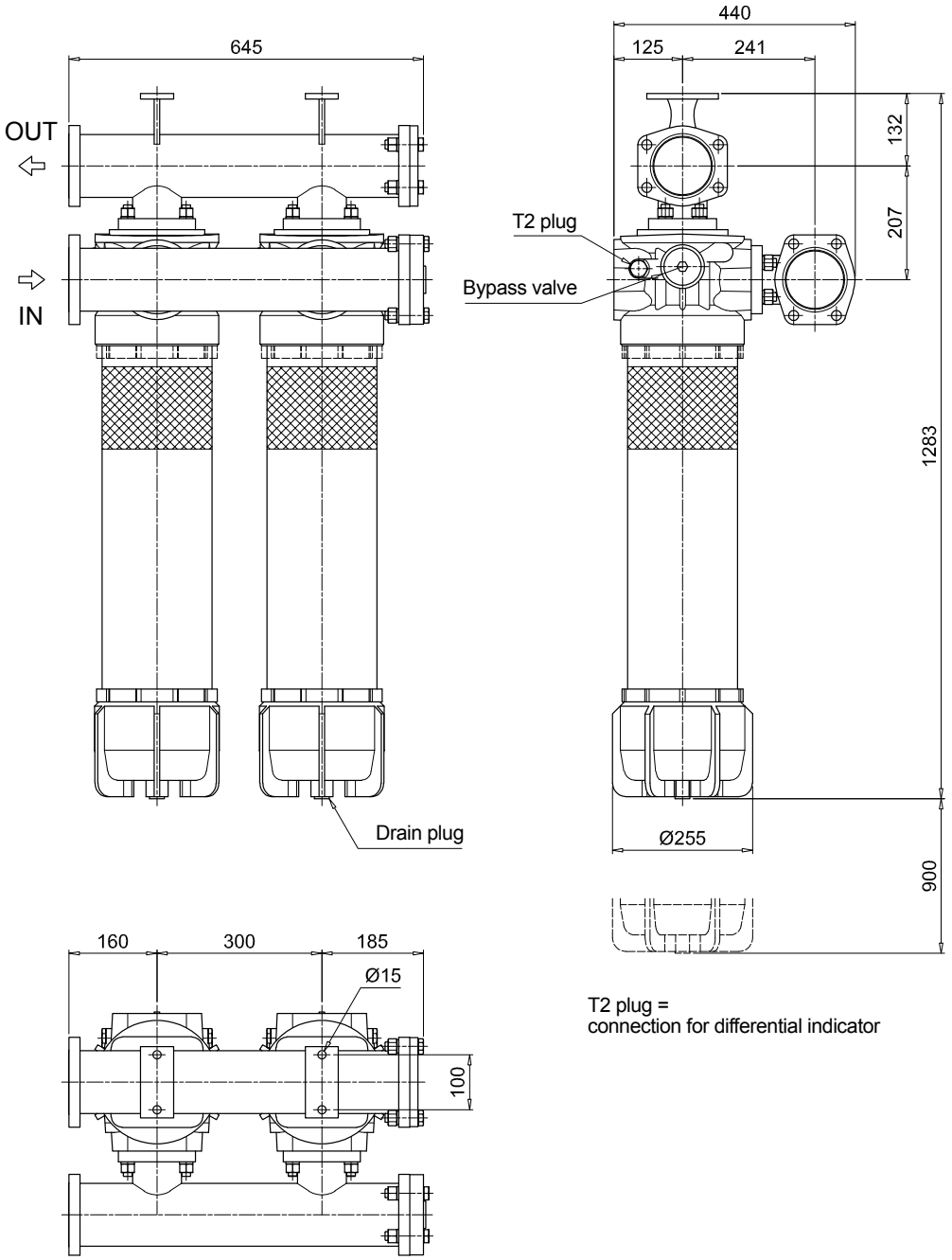

T2 plug =
connection for differential indicator

Dimensions

LMP903

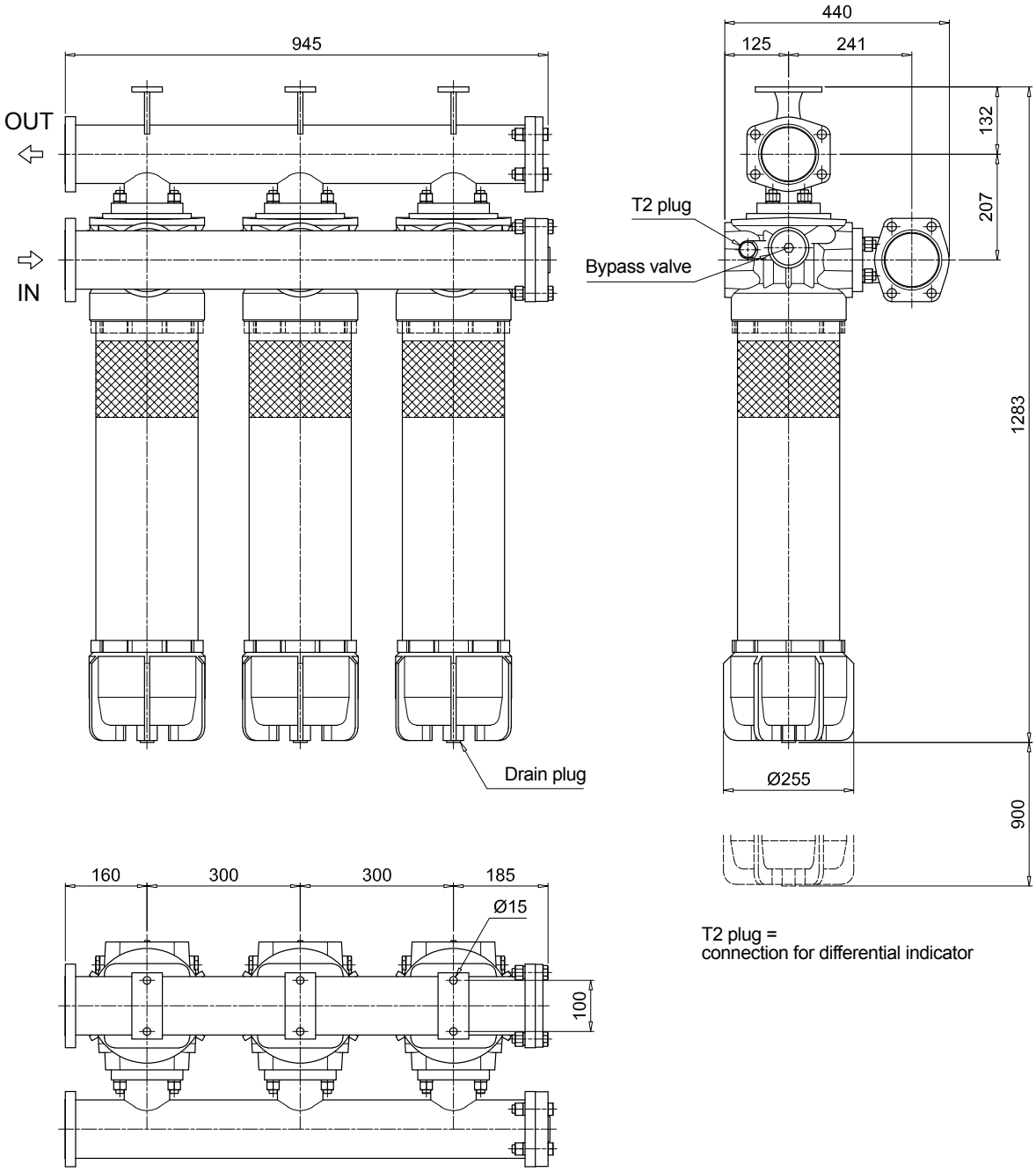

T2 plug =
connection for differential indicator

Order number for spare parts

LMP 902 - 903

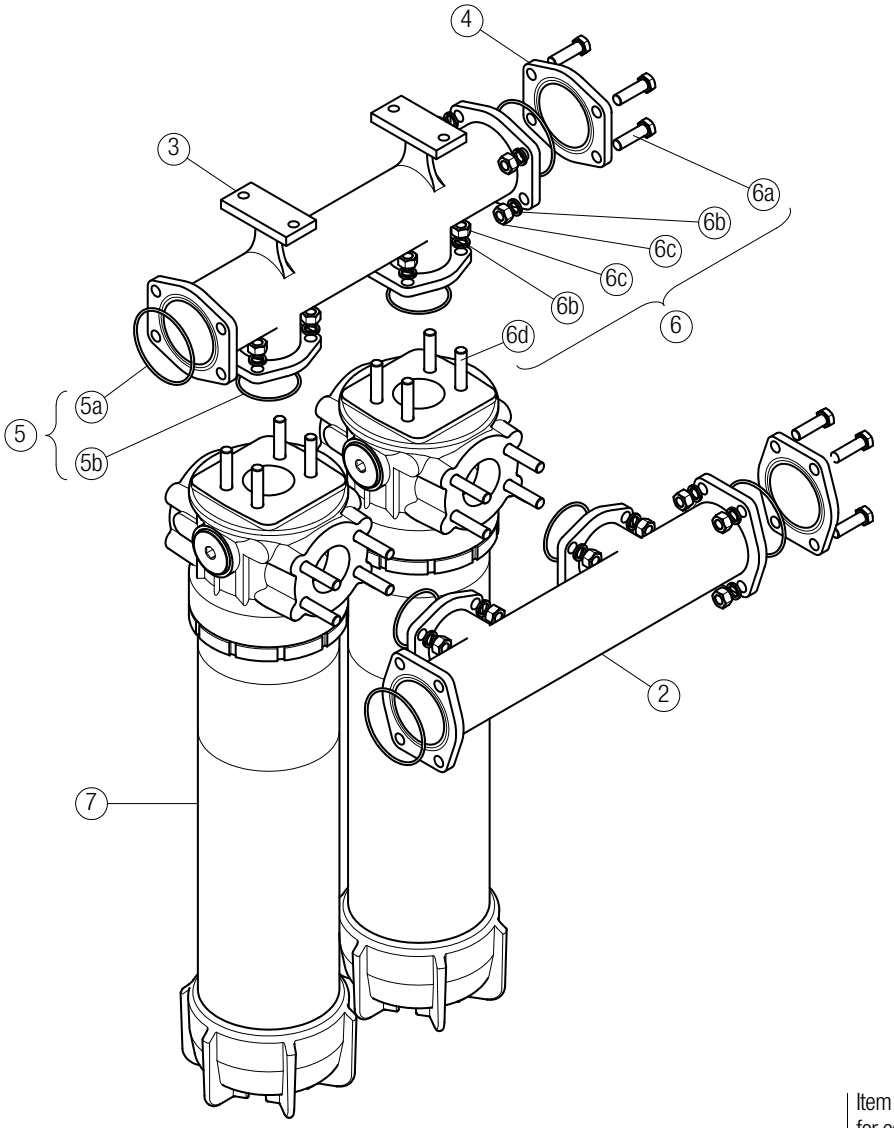

Item 7:
for complete filter code and spare parts, see LMP 900 - 901 series chapter

Quantity:
- filter spare parts:
LMP 902 - 2 pcs.
LMP 903 - 3 pcs.

- filter seal kit:
LMP 902 - 2 pcs.
LMP 903 - 3 pcs.

Item:	2	3		4		5 (5a-5b)			6 (6a ÷ 6d)		7	
Filter series	Manifold			4" SAE 3000 psi plugged flange		Manifolds seal kit			Threaded fasteners kit		Filter	
	Q.ty	IN	OUT	Q.ty		Q.ty	NBR	FPM	Q.ty		Q.ty	
LMP 902	1 pc.	01039270	01039271	2 pcs.	01042012	1 pc.	02050404	02050405	1 pc.	02049051	2 pcs.	LMP9012xxF1xxxNP02
LMP 903	1 pc.	01039337	01039338	2 pcs.		1 pc.	02050404	02050405	1 pc.	02049052	3 pcs.	

Clogging indicators

Differential indicators

Introduction

Filter elements are efficient only if their Dirt Holding Capacity is fully exploited.
This is achieved by using filter housings equipped with clogging indicators.

These devices trip when the clogging of the filter element causes an increase in pressure drop across the filter element.

The indicator is set to alarm before the element becomes fully clogged.

MP Filtri can supply differential pressure indicators with a visual, electrical or both signals.

Suitable indicator types

DIFFERENTIAL INDICATORS

Differential indicators are used on the Pressure line to check the efficiency of the filter element.
They measure the pressure upstream and downstream of the filter element (differential pressure).
Standard items are produced with special connection G 1/2" size.
Also available in Stainless Steel models.

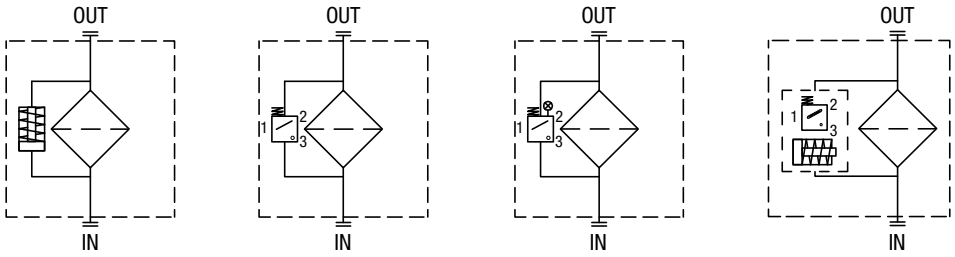

Quick reference guide

	Filter series	Visual indicator	Electrical indicator	Electrical / Visual indicator	Electronic indicator
With bypass valve	LMP 110 - 112 - 116 - 118 - 119 MULTIPORT LMP 120 - 122 - 123 MULTIPORT LMP 210 - 211 - LDP LMP 400 - 401 & 430 - 431 LMP 900 - 901 LMP 902 - 903 LMP 950 - 951 LMP 952 - 953 - 954 LMD 211 - 400 - 401 - 431 - 951 - LDD	DVA20xP01 DVM20xP01	DEA20xA50P01 DEM20xAxxP01	DLA20xA51P01 DLA20xA52P01 DLA20xA71P01 DLE20xA50P01 DLE20xF50P01	DTA20xF70P01
Without bypass valve	LMP 110 - 112 - 116 - 118 - 119 MULTIPORT LMP 120 - 122 - 123 MULTIPORT LMP 210 - 211 - LDP LMP 400 - 401 & 430 - 431 LMP 900 - 901 LMP 902 - 903 LMP 950 - 951 LMP 952 - 953 - 954 LMD 211 - 400 - 401 - 431 - 951 - LDD	DVA50xP01 DVM50xP01	DEA50xA50P01 DEM50xAxxP01	DLA50xA51P01 DLA50xA52P01 DLA50xA71P01 DLE50xA50P01 DLE50xF50P01	DTA50xF70P01

DEA*50

Electrical Differential Indicator

Settings	Ordering code
2.0 bar ±10%	DE A 20 x A 50 P01
5.0 bar ±10%	DE A 50 x A 50 P01

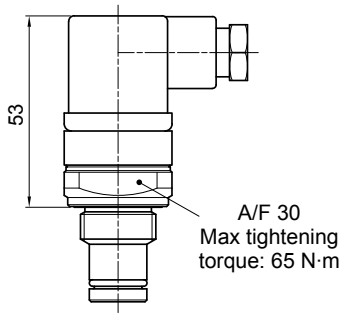

Hydraulic symbol

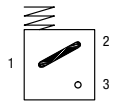

Electrical symbol

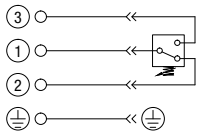

Materials
- Body: Brass
- Base: Black Nylon
- Contacts: Silver
- Seal: HNBR - FPM

Technical data
- Max working pressure: 420 bar
- Proof pressure: 630 bar
- Burst pressure: 1260 bar
- Working temperature: From -25 °C to +110 °C
- Compatibility with fluids: Mineral oils, Synthetic fluids HFA, HFB, HFC according to ISO 2943
- Degree protection: IP66 according to EN 60529 IP69K according to ISO 20653

Electrical data
- Electrical connection: EN 175301-803
- Resistive load: 0.2 A / 115 Vdc

DEM*10

Electrical Differential Indicator

Settings	Ordering code
2.0 bar ±10%	DE M 20 x x 10 P01
5.0 bar ±10%	DE M 50 x x 10 P01

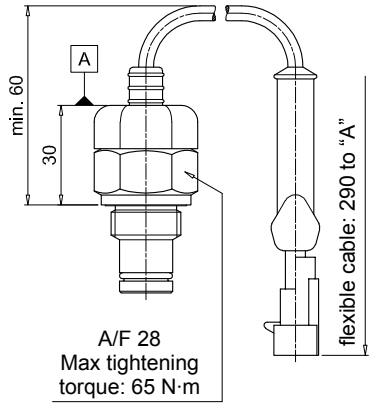

Hydraulic symbol

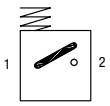

Electrical symbol

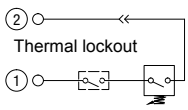

Materials
- Body: Brass
- Base: Black Nylon
- Contacts: Silver
- Seal: HNBR - FPM

Technical data
- Max working pressure: 420 bar
- Proof pressure: 630 bar
- Burst pressure: 1260 bar
- Working temperature: From -25 °C to +110 °C
- Compatibility with fluids: Mineral oils, Synthetic fluids HFA, HFB, HFC according to ISO 2943
- Degree protection: IP66 according to EN 60529

Electrical data
- Electrical connection: AMP Superseal series 1.5
- Resistive load: 0.2 A / 115 Vdc
- Switching type: Normally open contacts (NC on request)
- Thermal lockout: Normally open up to 30 °C (option "F")

DEM*20

Electrical Differential Indicator

Settings	Ordering code
2.0 bar ±10%	DE M 20 x x 20 P01
5.0 bar ±10%	DE M 50 x x 20 P01

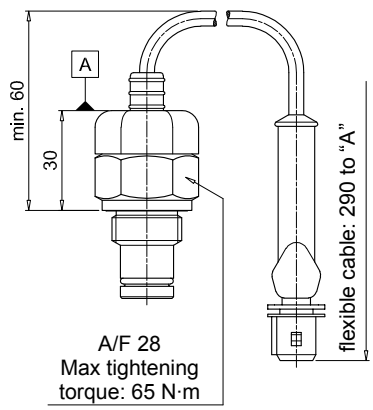

Hydraulic symbol

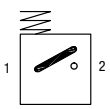

Electrical symbol

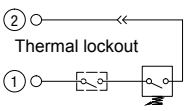

Materials
- Body: Brass
- Base: Black Nylon
- Contacts: Silver
- Seal: HNBR - FPM

Technical data
- Max working pressure: 420 bar
- Proof pressure: 630 bar
- Burst pressure: 1260 bar
- Working temperature: From -25 °C to +110 °C
- Compatibility with fluids: Mineral oils, Synthetic fluids HFA, HFB, HFC according to ISO 2943
- Degree protection: IP66 according to EN 60529

Electrical data
- Electrical connection: AMP Time junior
- Resistive load: 0.2 A / 115 Vdc
- Switching type: Normally open contacts (NC on request)
- Thermal lockout: Normally open up to 30 °C (option "F")

Dimensions

DEM*30

Electrical Differential Indicator

Settings	Ordering code
2.0 bar ±10%	DE M 20 x x 30 P01
5.0 bar ±10%	DE M 50 x x 30 P01

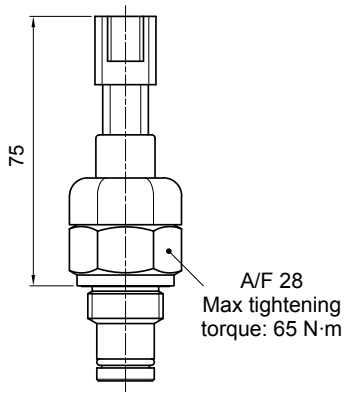

Hydraulic symbol

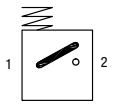

Electrical symbol

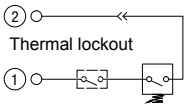

Materials
- Body: Brass
- Base: Black Nylon
- Contacts: Silver
- Seal: HNBR - FPM

Technical data
- Max working pressure: 420 bar
- Proof pressure: 630 bar
- Burst pressure: 1260 bar
- Working temperature: From -25 °C to +110 °C
- Compatibility with fluids: Mineral oils, Synthetic fluids HFA, HFB, HFC according to ISO 2943
- Degree protection: IP66 according to EN 60529

Electrical data
- Electrical connection: Deutsch DT-04-2-P
- Resistive load: 0.2 A / 115 Vdc
- Switching type: Normally open contacts (NC on request)
- Thermal lockout: Normally open up to 30 °C (option “F”)

DEM*35

Electrical Differential Indicator

Settings	Ordering code
2.0 bar ±10%	DE M 20 x x 35 P01
5.0 bar ±10%	DE M 50 x x 35 P01

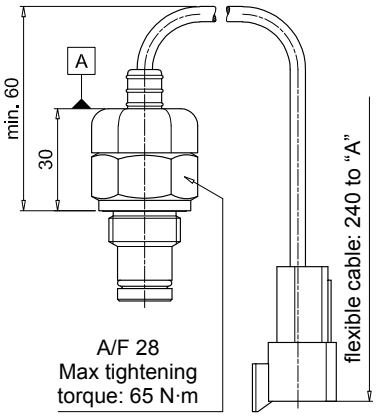

Hydraulic symbol

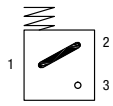

Electrical symbol

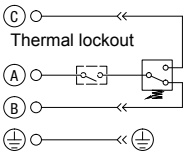

Materials
- Body: Brass
- Base: Black Nylon
- Contacts: Silver
- Seal: HNBR - FPM

Technical data
- Max working pressure: 420 bar
- Proof pressure: 630 bar
- Burst pressure: 1260 bar
- Working temperature: From -25 °C to +110 °C
- Compatibility with fluids: Mineral oils, Synthetic fluids HFA, HFB, HFC according to ISO 2943
- Degree protection: IP66 according to EN 60529

Electrical data
- Electrical connection: Deutsch DT-04-3-P
- Resistive load: 0.2 A / 115 Vdc
- Switching type: SPDT contact
- Thermal lockout: Normally open up to 30 °C (option “F”)

DLA*51 - DLA*52

Electrical/Visual Differential Indicator

Settings	Ordering code
2.0 bar ±10%	DL A 20 x A x x P01
5.0 bar ±10%	DL A 50 x A x x P01

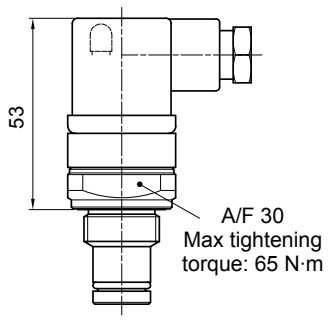

Hydraulic symbol

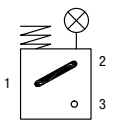

Electrical symbol

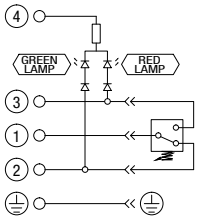

Materials
- Body: Brass
- Base: Transparent Nylon
- Contacts: Silver
- Seal: HNBR - FPM

Technical data
- Max working pressure: 420 bar
- Proof pressure: 630 bar
- Burst pressure: 1260 bar
- Working temperature: From -25 °C to +110 °C
- Compatibility with fluids: Mineral oils, Synthetic fluids HFA, HFB, HFC according to ISO 2943
- Degree protection: IP66 according to EN 60529 IP69K according to ISO 20653

Electrical data
- Electrical connection: EN 175301-803
- Type: 51 / 52
- Lamps: 24 Vdc / 110 Vdc
- Resistive load: 1 A / 24 Vdc / 1 A / 110 Vdc

DLA*71

Electrical/Visual Differential Indicator

Settings	Ordering code
2.0 bar ±10%	DL A 20 x A 71 P01
5.0 bar ±10%	DL A 50 x A 71 P01

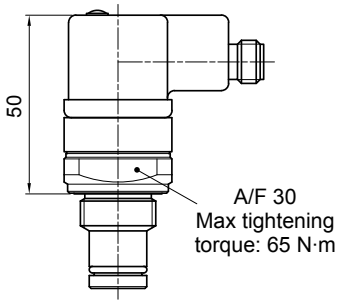

Hydraulic symbol

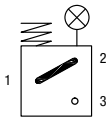

Electrical symbol

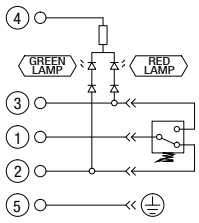

Materials
- Body: Brass
- Base: Black Nylon
- Contacts: Silver
- Seal: HNBR - FPM

Technical data
- Max working pressure: 420 bar
- Proof pressure: 630 bar
- Burst pressure: 1260 bar
- Working temperature: From -25 °C to +110 °C
- Compatibility with fluids: Mineral oils, Synthetic fluids HFA, HFB, HFC according to ISO 2943
- Degree protection: IP65 according to EN 60529 IP69K according to ISO 20653

Electrical data
- Electrical connection: IEC 61076-2-101 D (M12)
- Lamps 24 Vdc
- Resistive load: 0.4 A / 24 Vdc

DLE*A50

Electrical/Visual Differential Indicator

Settings	Ordering code
2.0 bar ±10%	DL E 20 x A 50 P01
5.0 bar ±10%	DL E 50 x A 50 P01

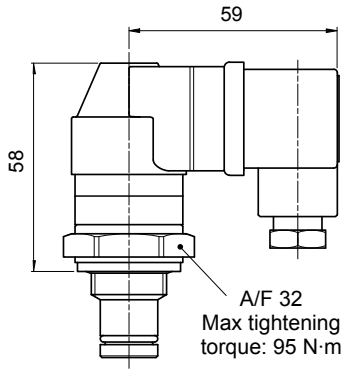

Hydraulic symbol

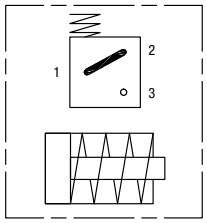

Electrical symbol

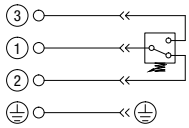

Materials
- Body: Brass
- Base: Black Nylon
- Contacts: Silver
- Seal: HNBR - FPM

Technical data
- Max working pressure: 420 bar
- Proof pressure: 630 bar
- Burst pressure: 1260 bar
- Working temperature: From -25 °C to +110 °C
- Compatibility with fluids: Mineral oils, Synthetic fluids HFA, HFB, HFC according to ISO 2943
- Degree protection: IP65 according to EN 60529

Electrical data
- Electrical connections: EN 175301-803
- Resistive load: 5 A / 250 Vac
- Available the connector with lamps

DLE*F50

Electrical/Visual Differential Indicator

Settings	Ordering code
2.0 bar ±10%	DL E 20 x F 50 P01
5.0 bar ±10%	DL E 50 x F 50 P01

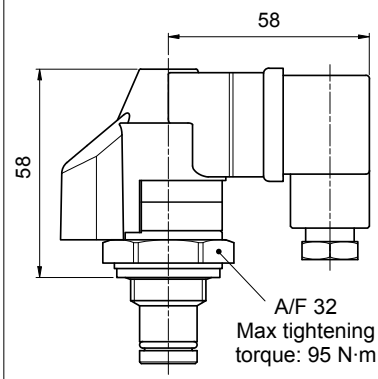

Hydraulic symbol

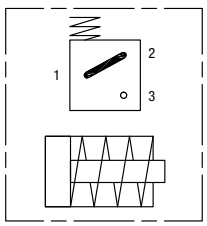

Electrical symbol

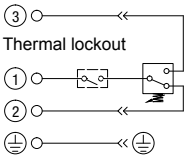

Materials
- Body: Brass
- Base: Black Nylon
- Contacts: Silver
- Seal: HNBR - FPM

Technical data
- Max working pressure: 420 bar
- Proof pressure: 630 bar
- Burst pressure: 1260 bar
- Working temperature: From -25 °C to +110 °C
- Compatibility with fluids: Mineral oils, Synthetic fluids HFA, HFB, HFC according to ISO 2943
- Degree protection: IP65 according to EN 60529

Electrical data
- Electrical connections: EN 175301-803
- Resistive load: 5 A / 250 Vac
- Thermal lockout setting: +30 °C

DTA*70

Electronic Differential Indicator

Settings	Ordering code
2.0 bar ±10%	DT A 20 x x 70 P01
5.0 bar ±10%	DT A 50 x x 70 P01

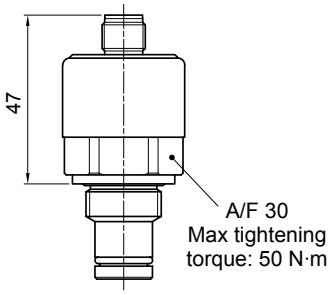

Hydraulic symbol

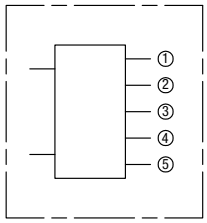

Electrical symbol

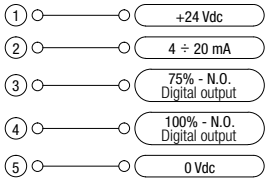

Materials

- Body: Brass
- Internal parts: Brass - Nylon
- Contacts: Silver
- Seal: HNBR - FPM

Industry 4.0 READY

Technical data

- Max working pressure: 420 bar
- Proof pressure: 630 bar
- Burst pressure: 1260 bar
- Compatibility with fluids: Mineral oils, Synthetic fluids HFA, HFB, HFC according to ISO 2943
- Degree protection: IP67 according to EN 60529

Electrical data

- Electrical connection: IEC 61076-2-101 D (M12)
- Power supply: 24 Vdc
- Analogue output: From 4 to 20 mA
- Thermal lockout: 30 °C (all output signals stalled up to 30 °C)

DVA

Visual Differential Indicator

Settings	Ordering code
2.0 bar ±10%	DV A 20 x P01
5.0 bar ±10%	DV A 50 x P01

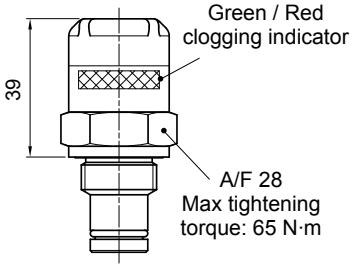

Hydraulic symbol

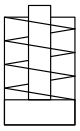

Materials

- Body: Brass
- Internal parts: Brass - Nylon
- Contacts: Silver
- Seal: HNBR - FPM

Technical data

- Reset: Automatic reset
- Max working pressure: 420 bar
- Proof pressure: 630 bar
- Burst pressure: 1260 bar
- Working temperature: From -25 °C to +110 °C
- Compatibility with fluids: Mineral oils, Synthetic fluids HFA, HFB, HFC according to ISO 2943
- Degree protection: IP65 according to EN 60529

DVM

Visual Differential Indicator

Settings	Ordering code
2.0 bar ±10%	DV M 20 x P01
5.0 bar ±10%	DV M 50 x P01

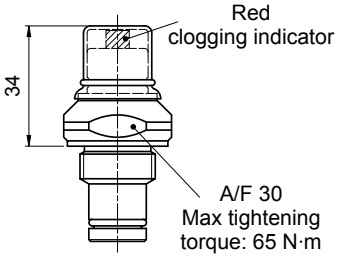

Hydraulic symbol

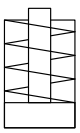

Materials

- Body: Brass
- Internal parts: Brass - Nylon
- Contacts: Silver
- Seal: HNBR - FPM

Technical data

- Reset: Manual reset
- Max working pressure: 420 bar
- Proof pressure: 630 bar
- Burst pressure: 1260 bar
- Working temperature: From -25 °C to +110 °C
- Compatibility with fluids: Mineral oils, Synthetic fluids HFA, HFB, HFC according to ISO 2943
- Degree protection: IP65 according to EN 60529

T2

Indicator plug

Seal	Ordering code
HNBR	T2 H
FPM	T2 V

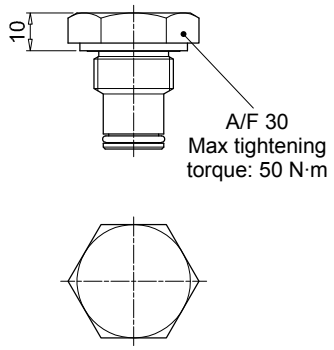

Materials

- Body: Phosphatized steel
- Seal: HNBR / FPM

DESIGNATION & ORDERING CODE - DIFFERENTIAL INDICATORS

Configuration example 1:	DE	M	20	H	F	50	P01
Configuration example 2:	DL	E	50	V	A	71	P01
Configuration example 3:	DT	A	20	H	F	70	P01
Configuration example 4:	DV	M	50	V			P01

Series

- **DE** Electrical differential indicator
- **DL** Electrical/Visual differential indicator
- **DT** Electronic differential indicator
- **DV** Visual differential indicator

Type	DE	DL	DT	DV
A Standard type	•	•	•	**A** With automatic reset
M With wired electrical connection	•			**M** With manual reset
E For high power supply		•		

Pressure setting

- **20** 2.0 bar
- **50** 5.0 bar

Seals

- **H** HNBR
- **V** FPM

Thermostat	DEA	DEM	DLA	DLE	DT	DV
A Without	•	•	•	•		
F With thermostat		•		•	•	

Electrical connections	DEA	DEM	DLA	DLE	DT	DV
10 Connection AMP Superseal series 1.5		•				
20 Connection AMP Timer Junior		•				
30 Connection Deutsch DT-04-2-P		•				
35 Connection Deutsch DT-04-3-P		•				
50 Connection EN 175301-803	•			•		
51 Connection EN 175301-803, transparent base with lamps 24 Vdc			•			
52 Connection EN 175301-803, transparent base with lamps 110 Vdc			•			
70 Connection IEC 61076-2-101 D (M12)					•	
71 Connection IEC 61076-2-101 D (M12), black base with lamps 24 Vdc			•			

Option

- **P01** MP Filtri standard
- **Pxx** Customized

DESIGNATION & ORDERING CODE - DIFFERENTIAL INDICATOR PLUG

Configuration example	T2	H

Series

- **T2** Indicator plug

Seals

- **H** HNBR
- **V** FPM

Accessories

RETAINING CLAMP

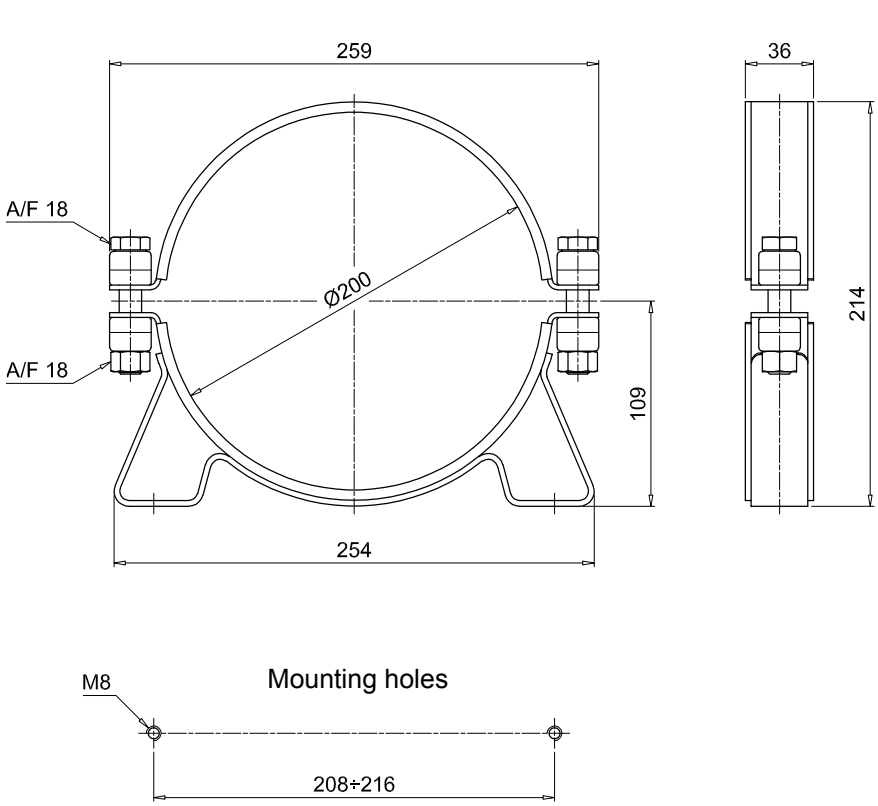

example
LMP950

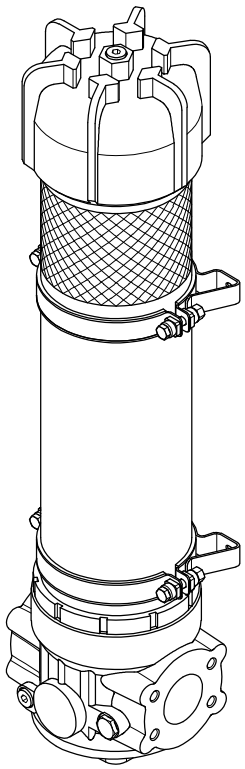

Configuration example: CFA | 20 | M | P01

Series
CFA Retaining clamp

Size
20

Screw
M Metric

Execution
P01 MP Filtri standard

High pressure filters are used as process filters to protect individual valves or the entire hydraulic circuit from contamination as per ISO 4406.
9 versions are available with operating pressures range from 110 bar up to 560 bar.
A range of products is available to resolve all filter mounting problems, in the following configurations:

- **In-line, with threaded and flange mounting**
- **Manifold top mounting**
- **Manifold side mounting**
- **Manifold mounting, to DIN 24340 CETOP R 35 H**
- **Manifold threaded/flange mounting in the top extraction filter cartridge version**
- **Duplex versions for continuous operation requirements**

FMP series is specifically designed and suitable for:
- **feed pumps of hydrostatic drives**
- **pressure lubrication**
- **hydraulic systems in the high pressure range**

FMM series is optimized for the protection of servo and proportional hydraulics:
- **in agricultural machinery**
- **in construction machinery**
- **in commercial vehicles**

HPB are kits designed for the direct integration into the control block; they can be easily integrated into the block through a simple cavity.

FHP & FHA series are the typical high-pressure filters optimized for industrial applications.

FHM series is designed for intermediate plate construction, CETOP design.

FHB series is designed for block mounting; the filter head can be screwed in from the outside.

FHF series is designed to assemble HF4 filter element according to SAE J2066.

FHD series is the duplex high pressure filter; with two independent filter heads, the flow can be switched without interruption during operation.

The range includes a complete set of valves:

- **Bypass valve**
- **Check valve**
- **Bypass + check valve**
- **Reverse-flow valve**
- **Reverse-flow + bypass valve**

FILTER SIZING

For the proper corrective factor Y see chapter at page 25

High pressure filters



FMP 039	page 455
FMP	463
FHP	475
FMM	493
HPB	503
FHA 051	513

FHM	page 521
FHB	539
FHF 325	553
FHD	563
INDICATORS	576

FMP 039 series

Maximum working pressure up to 11 MPa (110 bar) - Flow rate up to 80 l/min



FMP 039 GENERAL INFORMATION

Description

High Pressure filters

In-line
Maximum working pressure up to 11 MPa (110 bar)
Flow rate up to 80 l/min

FMP039 is a range of versatile medium pressure filter for transmission, protection of sensitive components in medium pressure hydraulic systems and filtration of the coolant into the machine tools.
They are directly connected to the lines of the system through the hydraulic fittings.

Available features:
- 1/2" female threaded connections, for a maximum flow rate of 80 l/min
- Fine filtration rating, to get a good cleanliness level into the system
- Bypass valve, to relieve excessive pressure drop across the filter media
- Low collapse filter element "N", for use with filters provided with bypass valve
- Visual, electrical and electronic differential clogging indicators

Common applications:
Delivery lines, in any medium pressure industrial equipment or mobile machines

Technical data

Filter housing materials
- Head: Anodized aluminium
- Housing: Anodized aluminium
- Bypass valve: Steel

Pressure
- Test pressure: 17 MPa (170 bar)
- Burst pressure: 33 MPa (330 bar)
- Pulse pressure fatigue test: 1 000 000 cycles with pressure from 0 to 11 MPa (110 bar)

Bypass valve
- Opening pressure 600 kPa (6 bar) ±10%
- Other opening pressures on request.

Δp element type
- Microfibre filter elements - series N: 20 bar
- Wire mesh filter elements - series N: 20 bar
- Fluid flow through the filter element from OUT to IN.

Seals
- Standard NBR series A
- Optional FPM series V

Temperature
From -25 °C to +110 °C

Connections
In-line Inlet/Outlet

Note
FMP 039 filters are provided for vertical mounting



Weights [kg] and volumes [dm³]

Filter series	Weights [kg]				Volumes [dm³]			
	Length	2	3	4	Length	2	3	4
FMP 039		0.60	0.70	0.80		0.19	0.26	0.34

Executions

Execution 1:
without indicator connection



Execution 6
double indicator connection (A - B)

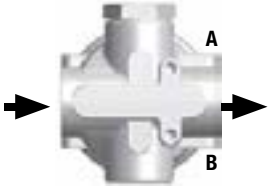

A:
Closure cap with standard T2 steel. The position of the cap is reversible.

B:
Standard closure cap with plastic thread protection.

If necessary, a second T2 plug is available, see ordering information.

Special connections on request

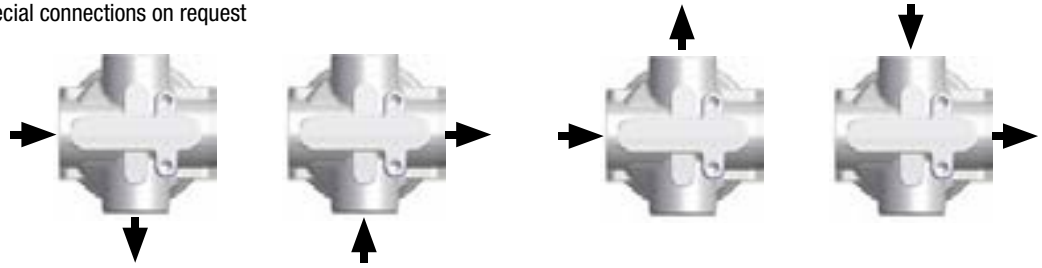

FILTER ASSEMBLY SIZING
Flow rates [l/min]

Filter series	Length	Filter element design - N Series					
		A03	A06	A10	A16	A25	M25
FMP 039	2	20	26	45	52	61	97
	3	35	39	56	64	76	98
	4	44	48	66	71	82	92

Maximum flow rate for a complete pressure filter with a pressure drop Δp = 1.5 bar.
The reference fluid has a kinematic viscosity of 30 mm^2/s (cSt) and a density of 0.86 kg/dm^3.
For different pressure drop or fluid viscosity we recommend to use our selection software available on www.mpfiltri.com.
You can also calculate the right size using the formulas present on the FILTER SIZING paragraph at the beginning of the full catalogue or at the beginning of the filter family brochure.
Please, contact our Sales Department for further additional information.

Hydraulic symbols

Filter series	Style S	Style B
FMP 039	•	•

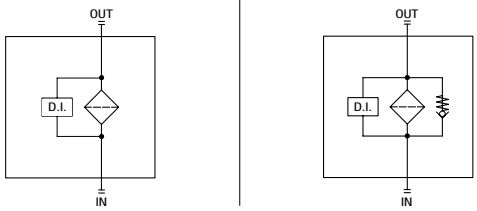

Pressure drop
Filter housings Δp pressure drop

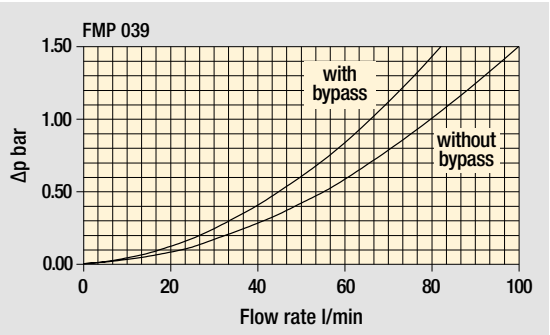

Bypass valve pressure drop

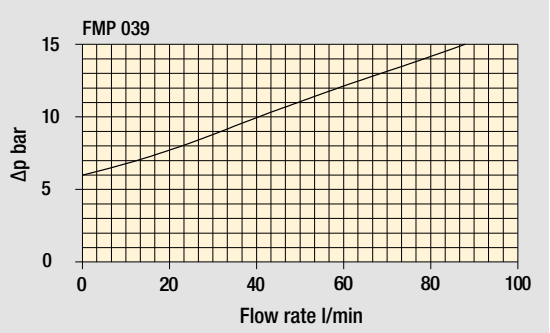

The curves are plotted using mineral oil with density of 0.86 kg/dm^3 in compliance with ISO 3968. Δp varies proportionally with density.

FMP 039

Designation & Ordering code

COMPLETE FILTER

Configuration example: FMP039 | 3 | B | A | B | 6 | A03 | N | P01

Series and size
FMP039

Length
2 | **3** | **4**

Valves
S Without bypass
B 6 bar

Seals
A NBR
V FPM

Connections
A G 1/2”
B 1/2” NPT
C SAE 8 - 3/4” - 16 UNF

Connection for differential indicator
1 Without
6 With two connections on both sides

Filtration rating (filter media)

A03	Inorganic microfiber 3 µm	**A16**	Inorganic microfiber 16 µm
A06	Inorganic microfiber 6 µm	**A25**	Inorganic microfiber 25 µm
A10	Inorganic microfiber 10 µm	**M25**	Wire mesh 25 µm

Element Δp
N 20 bar

Execution
P01 MP Filtri standard
Pxx Customized

FILTER ELEMENT

Configuration example: HP039 | 3 | A03 | A | N | P01

Element series and size
HP039

Element length
2 | **3** | **4**

Filtration rating (filter media)

A03	Inorganic microfiber 3 µm	**A16**	Inorganic microfiber 16 µm
A06	Inorganic microfiber 6 µm	**A25**	Inorganic microfiber 25 µm
A10	Inorganic microfiber 10 µm	**M25**	Wire mesh 25 µm

Seals
A NBR
V FPM

Element Δp
N 20 bar

Execution
P01 MP Filtri standard
Pxx Customized

ACCESSORIES

Differential indicators

		page
DEA	Electrical differential indicator	577
DEH	Hazardous area electronic differential indicator	577-578
DEM	Electrical differential indicator	578-579
DLA	Electrical / visual differential indicator	579-580
DLE	Electrical / visual differential indicator	580
DTA	Electronic differential indicator	581
DVA	Visual differential indicator	581
DVM	Visual differential indicator	581

Additional features

		page
T2	Plug	582

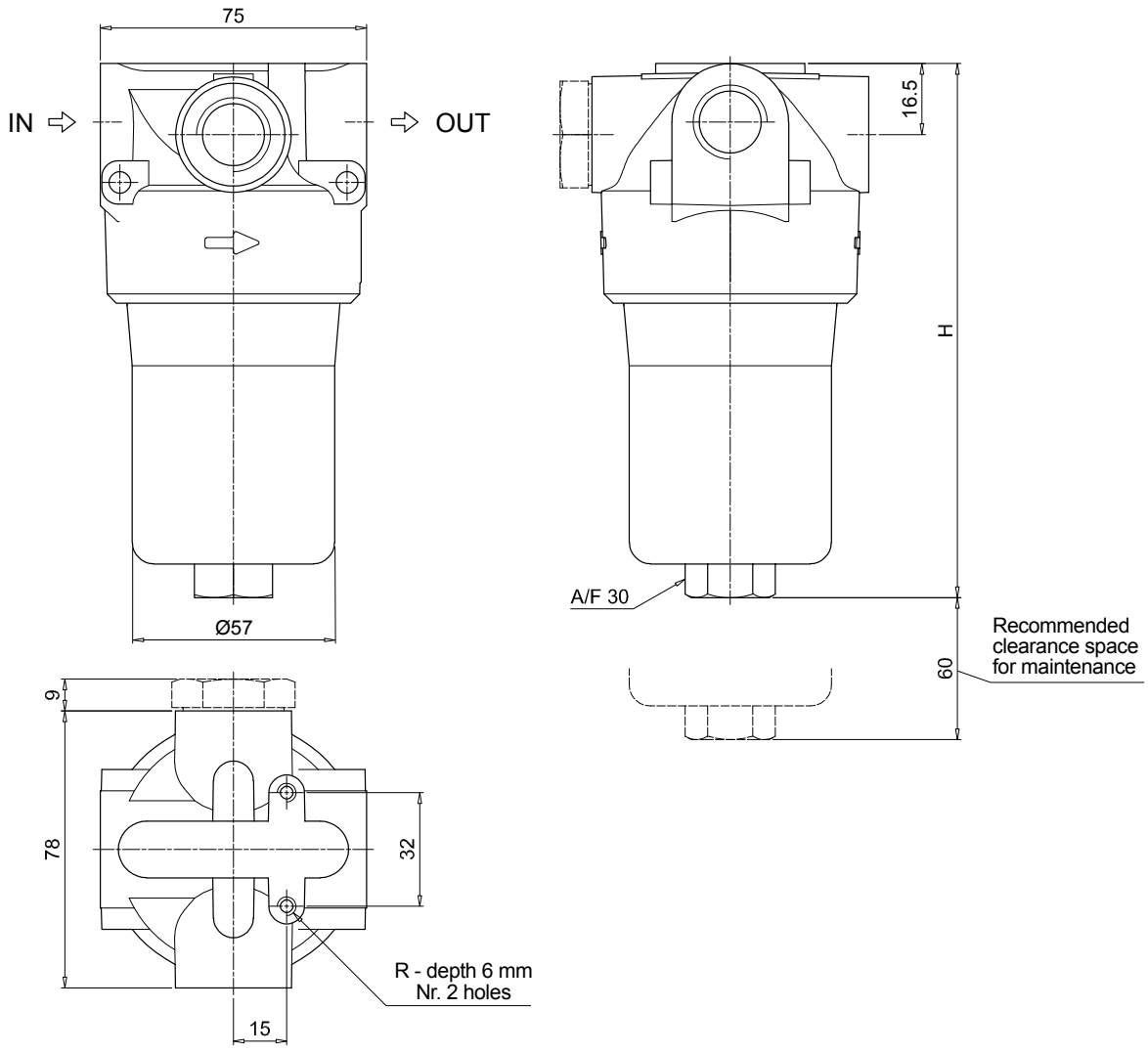

Version 1

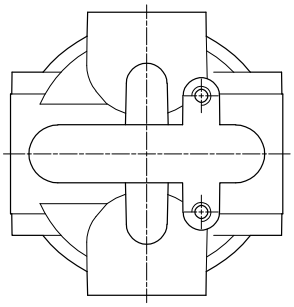

Version 6

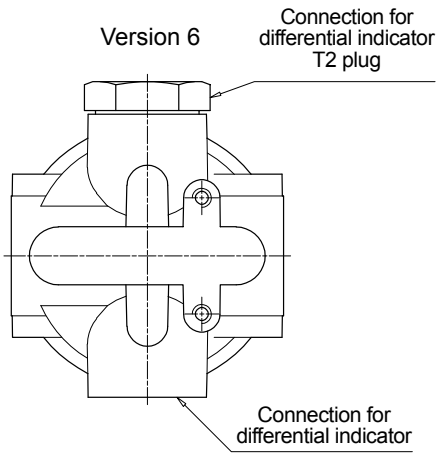

The position of the T2 plug is reversible

FMP039	
Filter length	**H [mm]**
2	151
3	194
4	238

Connections	**R**
A	M6
B - C	1/4" UNC

FMP 039 SPARE PARTS

Order number for spare parts

FMP 039

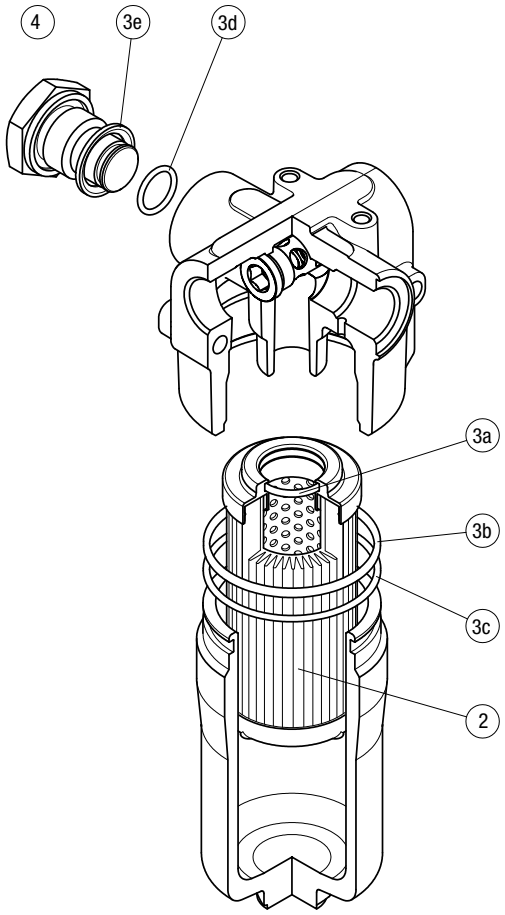

Item:	Q.ty: 1 pc. (2)	Q.ty: 1 pc. (3) (3a ÷ 3e)	
Filter series	**Filter element**	**Seal Kit code number NBR**	**FPM**
FMP 039	See order table	02050509	02050510

FMP series

Maximum working pressure up to 32 MPa (320 bar) - Flow rate up to 500 l/min



FMP GENERAL INFORMATION

Description

High Pressure filters

In-line
Maximum working pressure up to 32 MPa (320 bar)
Flow rate up to 500 l/min

FMP is a range of versatile high pressure filter for protection of sensitive components in high pressure hydraulic systems in the industrial equipment.
They are directly connected to the lines of the system through the hydraulic fittings.

Available features:
- Female threaded connections up to 1 1/2" and flanged connections up to 1 1/2", for a maximum flow rate of 500 l/min
- Fine filtration rating, to get a good cleanliness level into the system
- Bypass valve, to relieve excessive pressure drop across the filter media
- Check valve, to protect the system against reverse flow
- Low collapse filter element "N", for use with filters provided with bypass valve
- High collapse filter element "H", for use with filters not provided with bypass valve
- Low collapse filter element with external support "R", for filter element protection against the back pressure caused by the check valve in filters provided with the bypass valve
- High collapse filter element with external support "S", for filter element protection against the back pressure caused by the check valve in filters not provided with the bypass valve
- Visual, electrical and electronic differential clogging indicators

Common applications:
Delivery lines, in any high pressure industrial equipment or mobile machines

Technical data

Filter housing materials
- Head: Phosphatized cast iron
- Housing: Phosphatized steel
- Bypass valve: Brass
- Reverse Flow: Steel (only for series FMP 320)
- Check valve: Steel

Pressure
- Test pressure: 48 MPa (480 bar)
- Burst pressure: 96 MPa (960 bar)
- Pulse pressure fatigue test: 1 000 000 cycles with pressure from 0 to 32 MPa (320 bar)

Bypass valve
- Opening pressure 600 kPa (6 bar) ±10%
- Other opening pressures on request.

Δp element type
- Microfibre filter elements - series N-R: 20 bar
- Microfibre filter elements - series H-S: 210 bar
- Wire mesh filter elements - series N: 20 bar
- Fluid flow through the filter element from OUT to IN

Seals
- Standard NBR series A
- Optional FPM series V

Temperature
From -25 °C to +110 °C

Connections
In-line Inlet/Outlet

Note
FMP filters are provided for vertical mounting



Weights [kg] and volumes [dm³]

Filter series	Weights [kg]					Volumes [dm³]				
	Length	1	2	3	4	Length	1	2	3	4
FMP 065		3.26	3.62	4.83	-		0.36	0.47	0.84	-
FMP 135		5.61	7.21	8.27	-		0.45	0.78	1.00	-
FMP 320		10.95	13.08	15.37	17.85		1.03	1.75	2.52	3.35

FILTER ASSEMBLY SIZING
Flow rates [l/min]

		Filter element design - N Series					
Filter series	Length	A03	A06	A10	A16	A25	M25
FMP 065	1	23	30	48	54	72	105
	2	31	45	60	65	82	106
	3	52	60	80	84	94	108
FMP 135	1	69	73	120	129	171	201
	2	110	117	149	152	211	232
	3	151	152	192	195	212	233
FMP 320	1	130	144	244	296	361	477
	2	267	291	417	438	492	509
	3	348	390	476	493	503	519
	4	389	415	483	502	525	534

Maximum flow rate for a complete pressure filter with a pressure drop Δp = 1.5 bar.

The reference fluid has a kinematic viscosity of 30 mm^2/s (cSt) and a density of 0.86 kg/dm^3.

For different pressure drop or fluid viscosity we recommend to use our selection software available on www.mpfiltri.com.

You can also calculate the right size using the formulas present on the FILTER SIZING paragraph at the beginning of the full catalogue or at the beginning of the filter family brochure.

Please, contact our Sales Department for further additional information.

Hydraulic symbols

Filter series	Style S - E	Style B - C	Style T	Style D
FMP 065	•	•	•	•
FMP 135	•	•	•	•
FMP 320	•	•	•	•

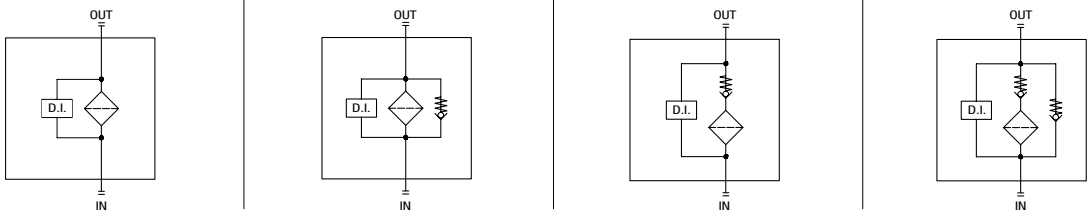

Pressure drop

Filter housings Δp pressure drop

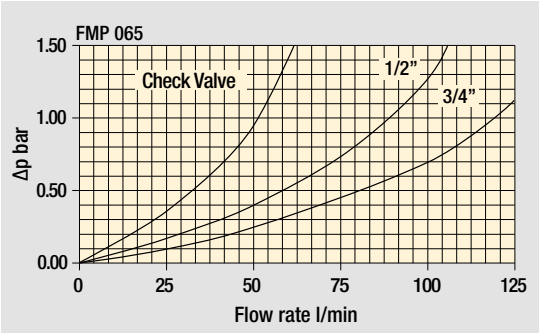

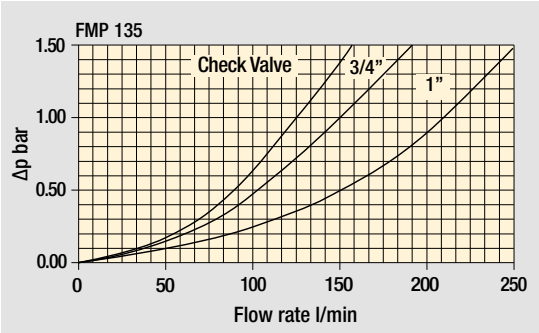

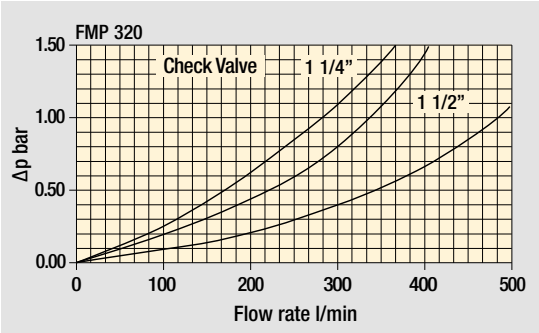

Bypass valve pressure drop

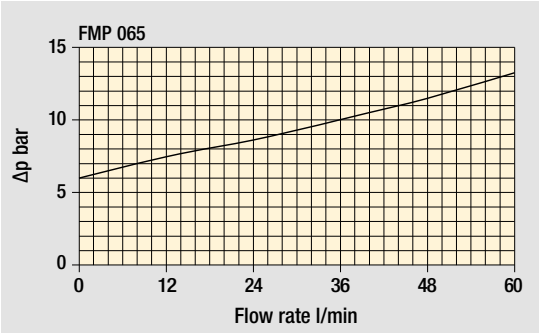

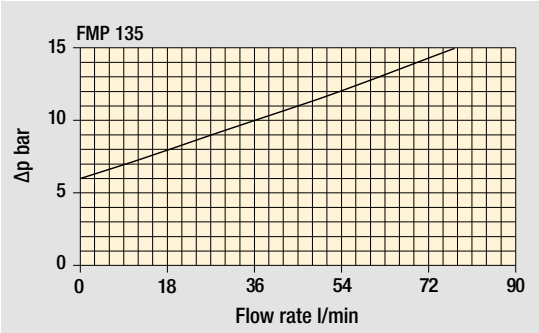

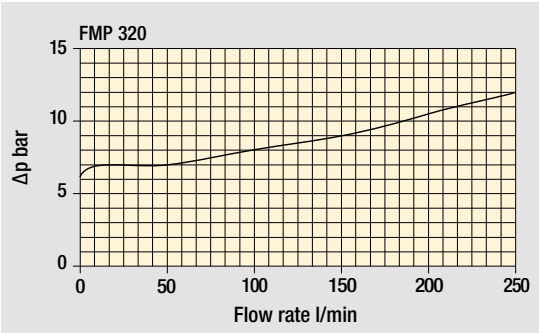

Valves

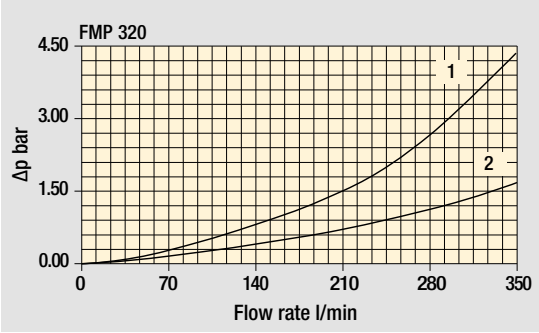

Filter housing with check valve

1 - Reverse flow
2 - In filter direction

The curves are plotted using mineral oil with density of 0.86 kg/dm^3 in compliance with ISO 3968. Δp varies proportionally with density.

FMP FMP065 - FMP135 - FMP320

Designation & Ordering code

COMPLETE FILTER

Configuration example: FMP065 | 3 | T | A | G1 | M25 | S | P01

Series and size

FMP065 | **FMP135** | **FMP320**

Length	FMP065	FMP135	FMP320
1	•	•	•
2	•	•	•
3	•	•	•
4			•

Valves

S	Without bypass	**C**	With bypass 6 bar, plug on the opposite side
E	Without bypass, plug on the opposite side	**T**	With check valve, without bypass
B	With bypass 6 bar	**D**	With check valve, with bypass

Seals

A	NBR	**V**	FPM

Connections	FMP065	FMP135	FMP320
G1	G 1/2"	G 3/4"	G 1 1/4"
G2	G 3/4"	G 1"	G 1 1/2"
G3	1/2" NPT	3/4" NPT	1 1/4" NPT
G4	3/4" NPT	1" NPT	1 1/2" NPT
G5	SAE 8 - 3/4" - 16 UNF	SAE 12 - 1 1/16" - 12 UN	SAE 20 - 1 5/8" - 12 UN
G6	SAE 12 - 1 1/16" - 12 UN	SAE 16 - 1 5/16" - 12 UN	SAE 24 - 1 7/8" - 12 UN
F1	-	3/4" SAE 3000 psi/M	1 1/4" SAE 3000 psi/M
F2	-	1" SAE 3000 psi/M	1 1/2" SAE 3000 psi/M
F3	-	3/4" SAE 3000 psi/UNC	1 1/4" SAE 3000 psi/UNC
F4	-	1" SAE 3000 psi/UNC	1 1/2" SAE 3000 psi/UNC

Filtration rating (filter media)

A03	Inorganic microfiber	3 µm
A06	Inorganic microfiber	6 µm
A10	Inorganic microfiber	10 µm
A16	Inorganic microfiber	16 µm
A25	Inorganic microfiber	25 µm
M25	Wire mesh	25 µm

Element Δp		Valves S	E	B	C	T	D
N	20 bar			•	•		
R	20 bar						•
H	210 bar	•	•				
S	210 bar					•	

Execution	Filter length 1	2	3	4
P01 MP Filtri standard	•	•	•	•
P02 Maintenance from the bottom of the housing				•
Pxx Customized				

FILTER ELEMENT

Configuration example: HP065 | 3 | M25 | A | S | P01

Element series and size

HP065 | **HP135** | **HP320**

Element length	HP065	HP135	HP320
1	•	•	•
2	•	•	•
3	•	•	•
4			•

Filtration rating (filter media)

A03	Inorganic microfiber	3 µm
A06	Inorganic microfiber	6 µm
A10	Inorganic microfiber	10 µm
A16	Inorganic microfiber	16 µm
A25	Inorganic microfiber	25 µm
M25	Wire mesh	25 µm

Seals

A	NBR
V	FPM

Element Δp

N	20 bar
R	20 bar
H	210 bar
S	210 bar

Execution

P01	MP Filtri standard
Pxx	Customized

ACCESSORIES

Differential indicators

		page
DEA	Electrical differential indicator	577
DEH	Hazardous area electronic differential indicator	577-578
DEM	Electrical differential indicator	578-579
DLA	Electrical / visual differential indicator	579-580
DLE	Electrical / visual differential indicator	580
DTA	Electronic differential indicator	581
DVA	Visual differential indicator	581
DVM	Visual differential indicator	581

Additional features

		page
T2	Plug	582

FMP065

Filter length	H [mm]
1	169
2	200
3	302

Connections	R
G1-G2	M8
G3-G4-G5-G6	5/16" UNC

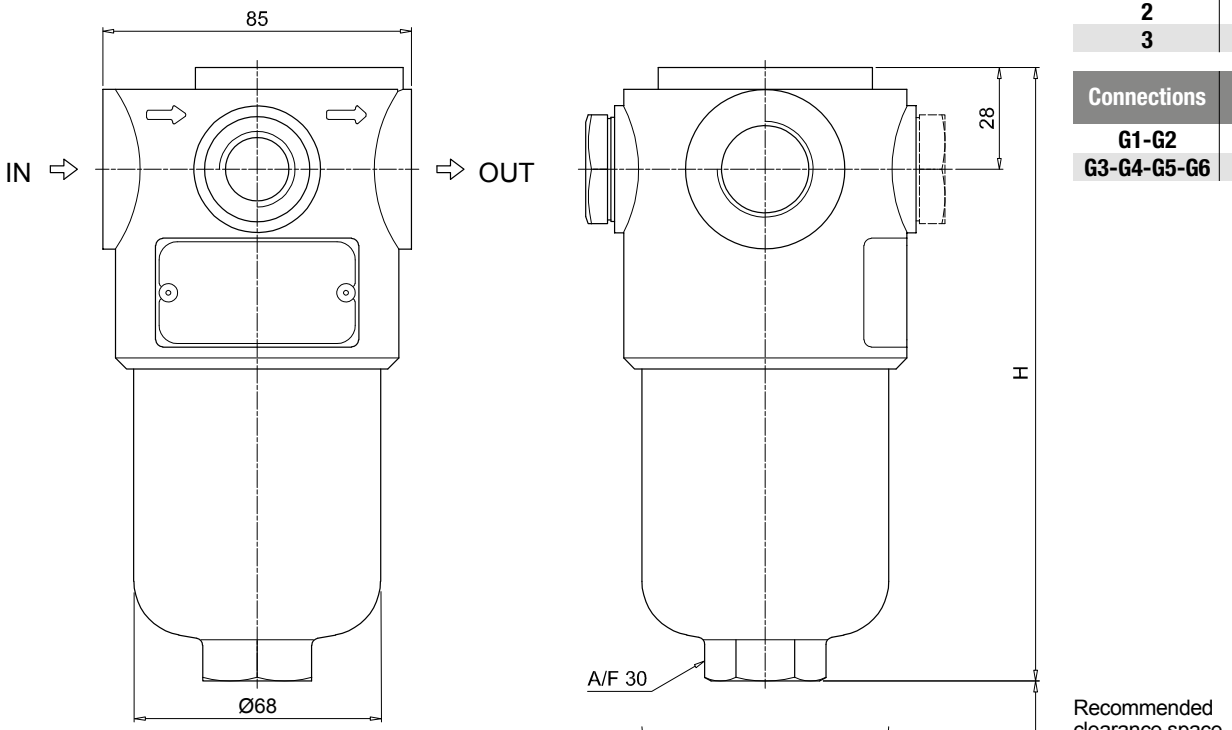

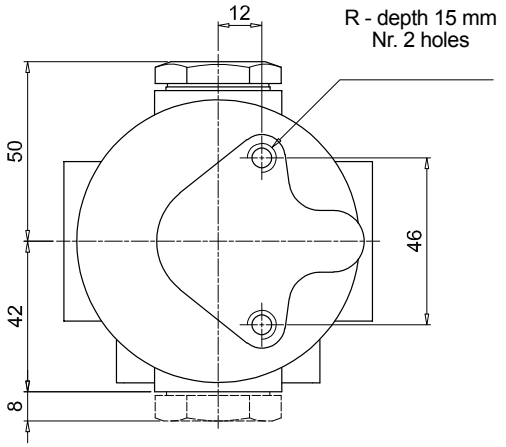

Valves S - B - T - D

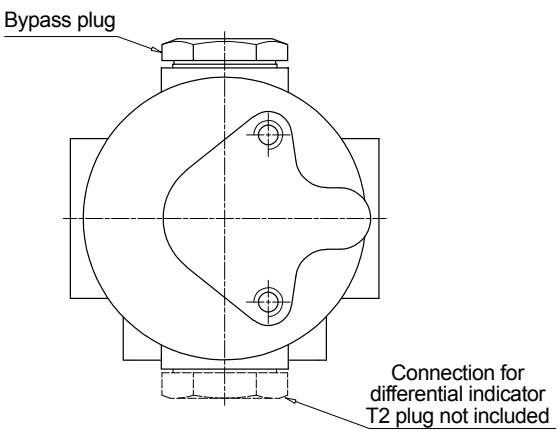

Valves E - C

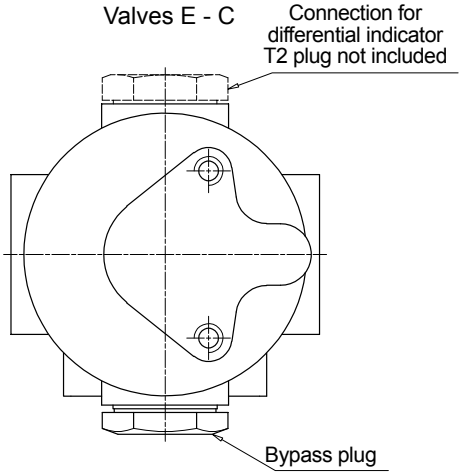

Dimensions

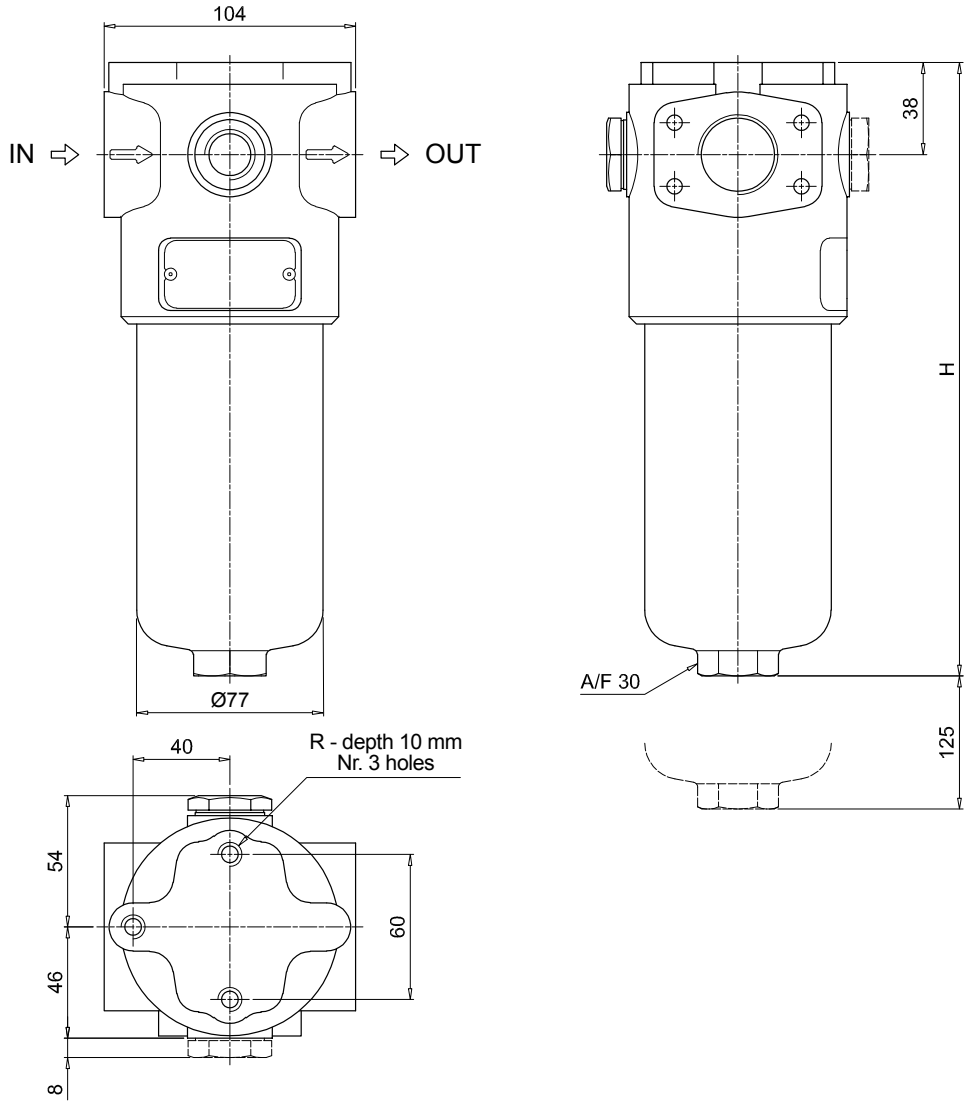

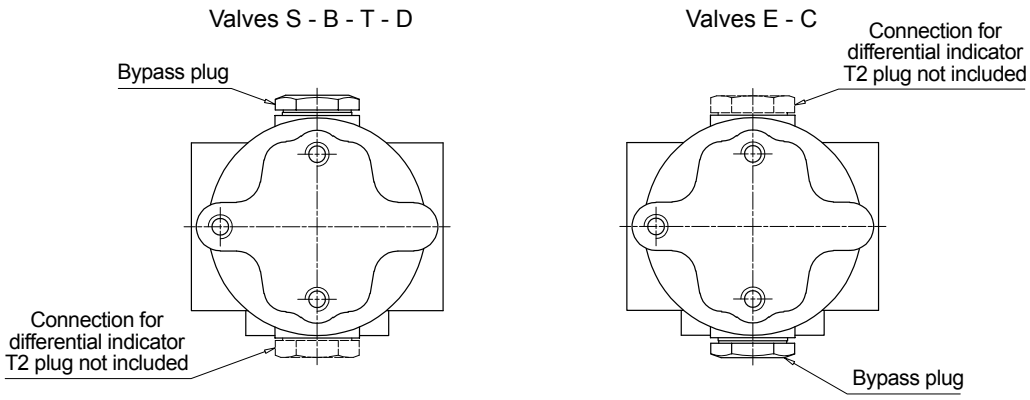

FMP135

Filter length	H [mm]
1	221
2	334
3	409

Connections	R
G1-G2	M10
G3-G4-G5-G6	3/8" UNC
F1-F2	M10
F3-F4	3/8" UNC

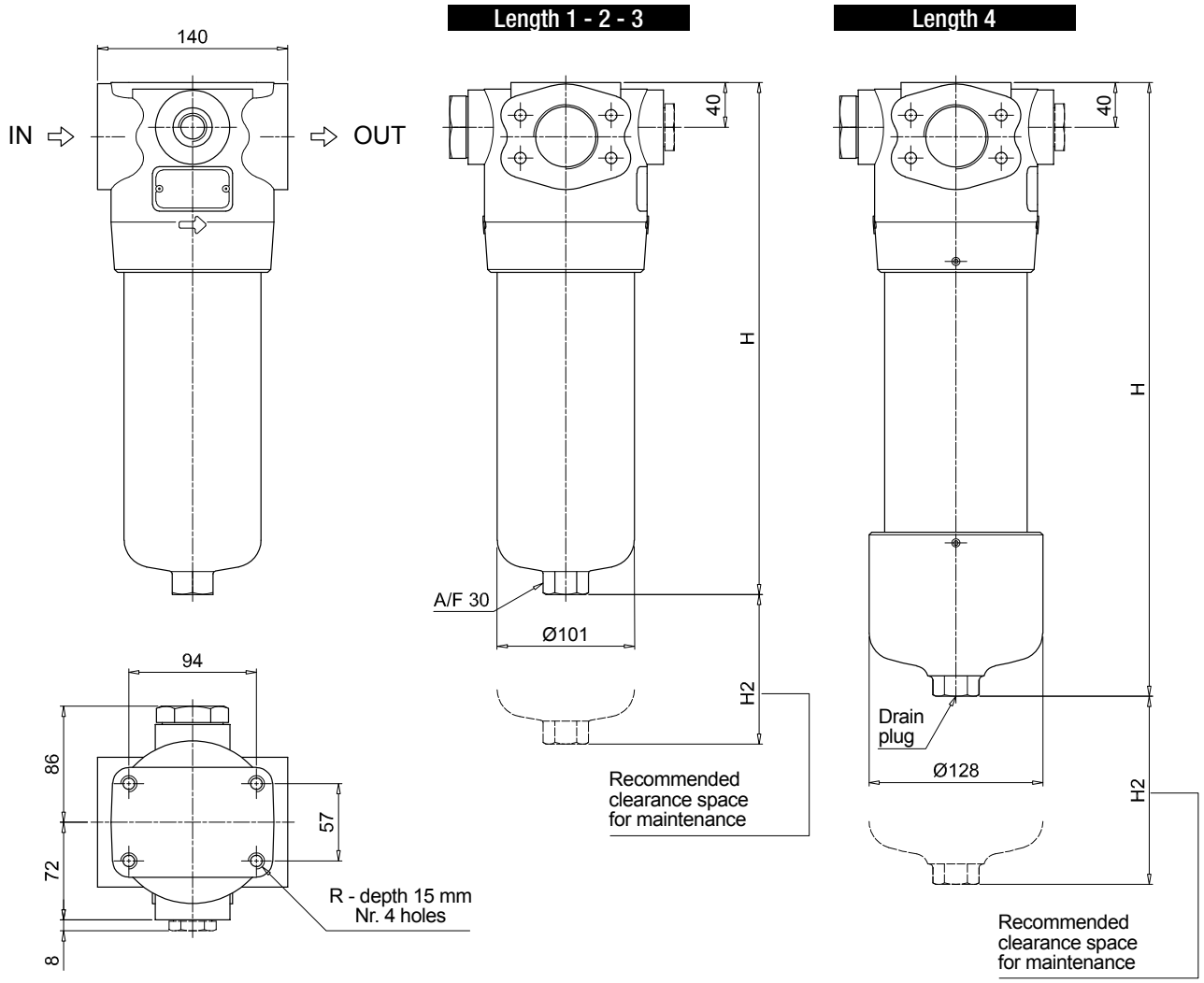

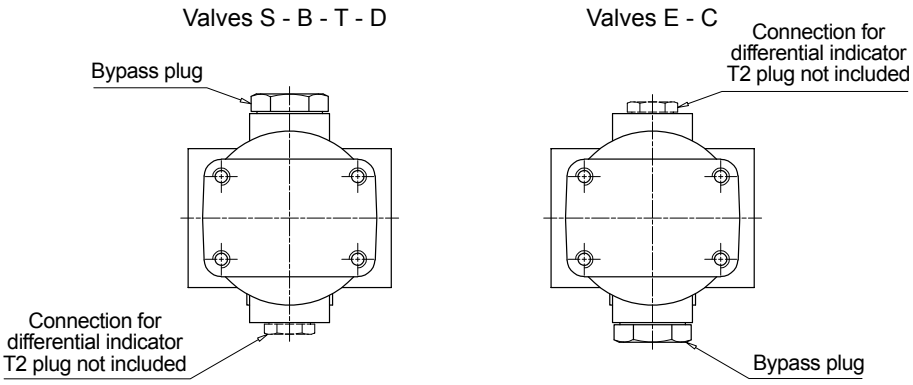

FMP320

Filter length	H [mm]	H2 [mm] Execution P01	P02
1	263	150	-
2	386	150	-
3	518	150	-
4	671	150	550

Connections	R
G1-G2	M12
G3-G4-G5-G6	1/2" UNC
F1-F2	M12
F3-F4	1/2" UNC

Order number for spare parts

FMP 065 - 135 - 320

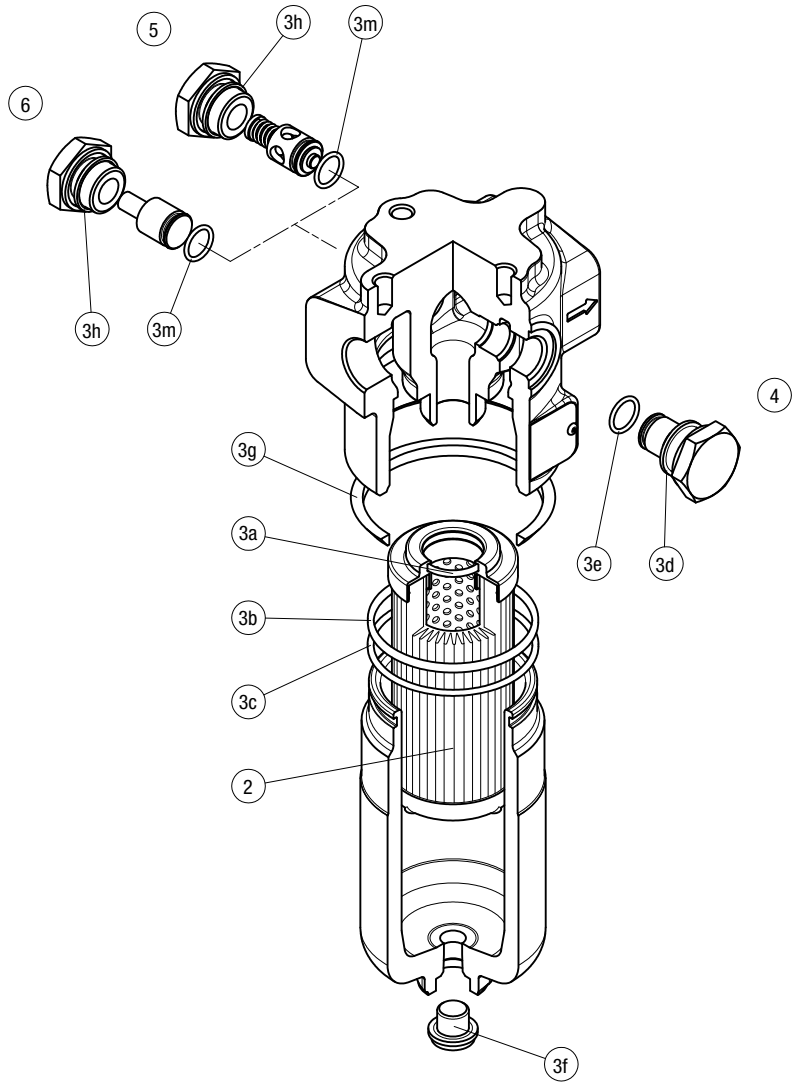

Item:	Q.ty: 1 pc. 2	Q.ty: 1 pc. 3 (3a ÷ 3m)		Q.ty: 1 pc. 4		Q.ty: 1 pc. 5		Q.ty: 1 pc. 6	
Filter series	**Filter element**	**Seal Kit code number NBR**	**FPM**	**Indicator connection plug NBR**	**FPM**	**Bypass assembly NBR**	**FPM**	**Non-bypass assembly NBR**	**FPM**
FMP 065	See order table	02050267	02050278	T2H	T2V	02001312	02001385	02001314	02001386
FMP 135		02050293	02050294			02001312	02001385	02001314	02001386
FMP 320		02050274	02050285			02001396	02001397	02001398	02001399

FHP series

Maximum working pressure up to 42 MPa (420 bar) - Flow rate up to 630 l/min



FHP GENERAL INFORMATION

Description

High Pressure filters

In-line
Maximum working pressure up to 42 MPa (420 bar)
Flow rate up to 630 l/min

FHP is a range of versatile high pressure filter for protection of sensitive components in high pressure hydraulic systems in the industrial equipment.
They are directly connected to the lines of the system through the hydraulic fittings.

Available features:
- Female threaded connections up to 1 1/2" and flanged connections up to 2", for a maximum return flow rate of 630 l/min
- Fine filtration rating, to get a good cleanliness level into the system
- Bypass valve, to relieve excessive pressure drop across the filter media
- Check valve, to protect the system against reverse flow
- Reverse flow valve, to allow bidirectional flow through the filter housing. The back flow is not filtered. The filter requires the use of internal check valves to direct the flow through the element in one direction and around the element in the other
- Low collapse filter element "N", for use with filters provided with bypass valve
- High collapse filter element "H", for use with filters not provided with bypass valve
- Low collapse filter element with external support "R", for filter element protection against the back pressure caused by the check valve or the reverse flow in filters provided with the bypass valve
- High collapse filter element with external support "S", for filter element protection against the back pressure caused by the check valve or the reverse flow in filters not provided with the bypass valve
- Visual, electrical and electronic differential clogging indicators

Common applications:
Delivery lines, in any high pressure industrial equipment or mobile machines

Technical data

Filter housing materials
- Head: Phosphatized cast iron
- Housing: Phosphatized steel
- Bypass valve
  AISI 316L: FHP 010 - 011
  Brass: FHP 065 - 135
  Brass / AISI 304: FHP 350
  Steel: FHP 500
- Reverse Flow
  Steel: FHP 350 - FHP 500
- Check valve: Steel

Pressure
- Test pressure: 63 MPa (630 bar)
- Burst pressure: 126 MPa (1260 bar)
- Pulse pressure fatigue test: 1 000 000 cycles with pressure from 0 to 42 MPa (420 bar)

Bypass valve
- Opening pressure 600 kPa (6 bar) ±10%
- Other opening pressures on request.

Δp element type
- Microfibre filter elements - series N: 20 bar
- Microfibre filter elements - series R: 20 bar (not available for FHP 010-011 and FHP 500)
- Microfibre filter elements - series H: 210 bar
- Microfibre filter elements - series S: 210 bar (only for FHP 500)
- Wire mesh filter elements - series N: 20 bar
- Fluid flow through the filter element from OUT to IN

Seals
- Standard NBR series A
- Optional FPM series V

Temperature
From -25 °C to +110 °C

Connections
FHP 010 - 065 - 135 - 350 - 500:
In-line Inlet/Outlet
FHP 011:
90° Inlet/Outlet

Note
FHP filters are provided for vertical mounting



Weights [kg] and volumes [dm³]

Filter series	Weights [kg]						Volumes [dm³]					
	Length	1	2	3	4	5	Length	1	2	3	4	5
FHP 010 - 011		2.05	2.18	2.64	3.13	-		0.10	0.12	0.15	0.20	-
FHP 065		4.26	4.62	5.83	-	-		0.25	0.30	0.50	-	-
FHP 135		7.11	8.71	9.76	-	-		0.43	0.76	0.97	-	-
FHP 350		13.95	16.08	18.37	20.85	-		1.00	1.72	2.49	3.32	-
FHP 500		27.00	31.17	34.69	46.70	52.5		1.71	2.43	3.04	5.18	6.51

FILTER ASSEMBLY SIZING
Flow rates [l/min]

		Filter element design - H Series					Filter element design - N Series					
Filter series	Length	A03	A06	A10	A16	A25	A03	A06	A10	A16	A25	M25
FHP 010	**1**	3	5	6	7	8	4	6	8	9	10	37
	2	5	7	13	16	22	6	8	16	19	24	40
	3	10	13	22	25	30	11	14	23	26	31	41
	4	12	15	25	27	32	16	19	27	30	33	41
FHP 011	**1**	3	5	6	7	9	4	6	8	9	11	47
	2	5	7	14	17	24	7	9	17	21	28	52
	3	11	14	25	29	36	11	14	26	30	37	53
	4	12	16	28	32	38	17	21	32	36	40	54
FHP 065	**1**	24	25	50	59	84	25	33	56	63	90	142
	2	33	38	68	77	98	34	52	72	79	106	143
	3	61	70	100	107	123	61	73	101	108	125	147
FHP 135	**1**	49	55	95	98	147	67	72	115	122	159	184
	2	89	106	129	131	163	105	111	140	142	192	209
	3	120	132	158	166	180	141	143	176	179	193	211
FHP 350	**1**	108	115	188	197	301	127	140	234	282	343	451
	2	196	225	317	323	396	256	278	394	415	465	480
	3	266	310	384	392	440	331	370	450	466	475	490
	4	308	333	391	398	445	369	393	456	474	495	503
FHP 500	**1**	144	157	265	268	355	269	305	390	406	444	612
	2	232	262	350	363	398	321	357	433	441	484	619
	3	293	301	398	408	455	396	416	497	499	537	622
	4	336	377	452	455	507	430	475	516	524	545	626
	5	420	428	494	500	544	475	493	535	545	569	627

Maximum flow rate for a complete pressure filter with a pressure drop Δp = 1.5 bar.

The reference fluid has a kinematic viscosity of 30 mm^2/s (cSt) and a density of 0.86 kg/dm^3.

For different pressure drop or fluid viscosity we recommend to use our selection software available on www.mpfiltri.com.

You can also calculate the right size using the formulas present on the FILTER SIZING paragraph at the beginning of the full catalogue or at the beginning of the filter family brochure.

Please, contact our Sales Department for further additional information.

Hydraulic symbols

Filter series	Style S	Style B	Style T	Style D	Style V	Style Z
FHP 010 - 011	•	•			•	•
FHP 065	•	•	•			
FHP 135	•	•	•			
FHP 350	•	•	•	•	•	•
FHP 500	•	•	•	•	•	•

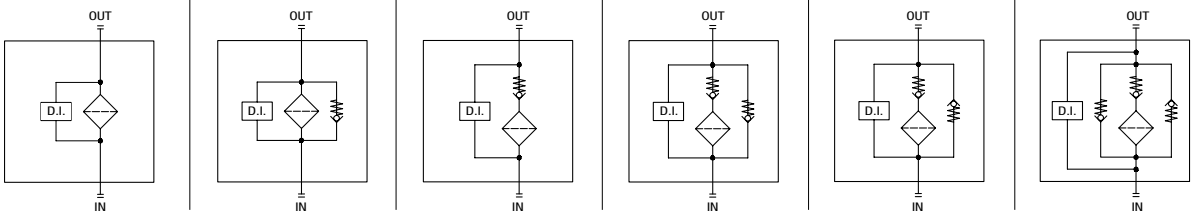

Pressure drop

Filter housings Δp pressure drop

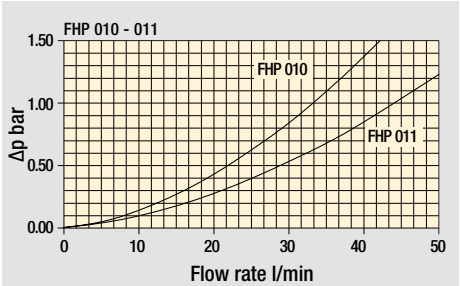

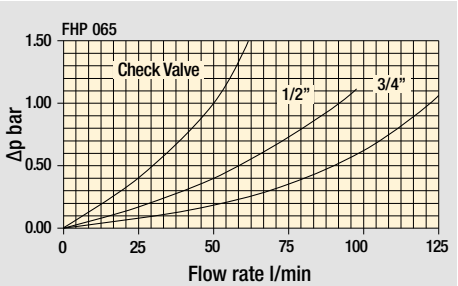

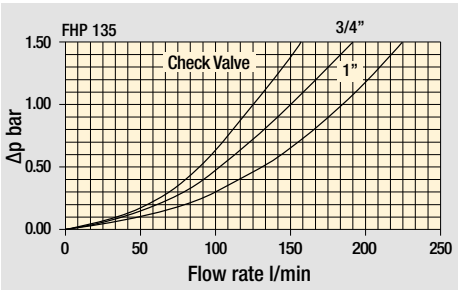

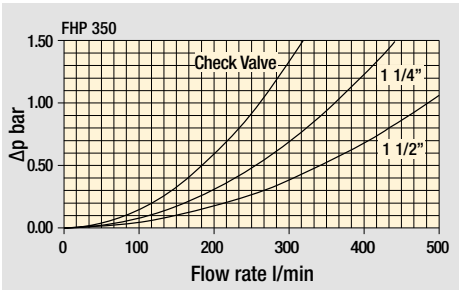

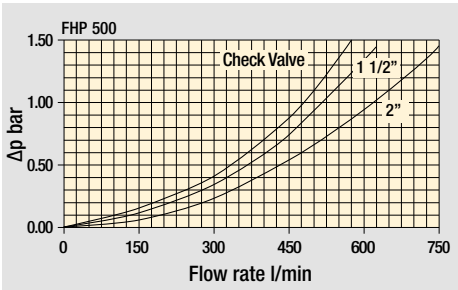

Bypass valve pressure drop

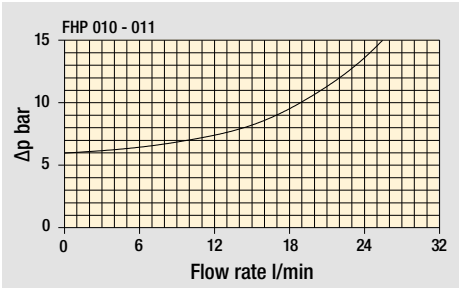

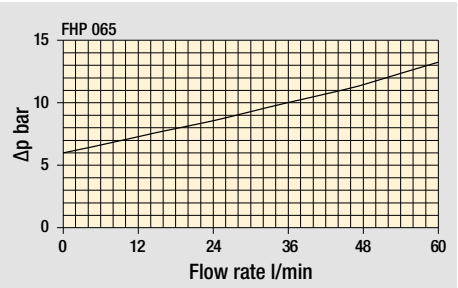

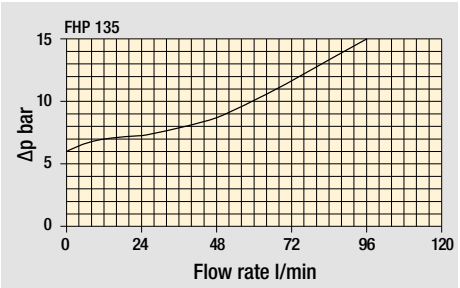

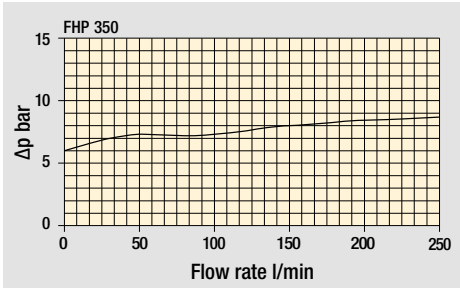

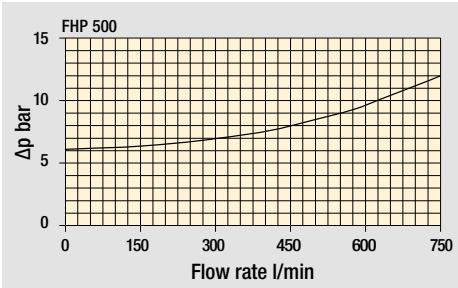

Valves

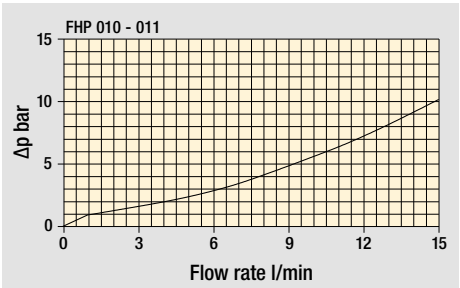

Filter housing with check valve

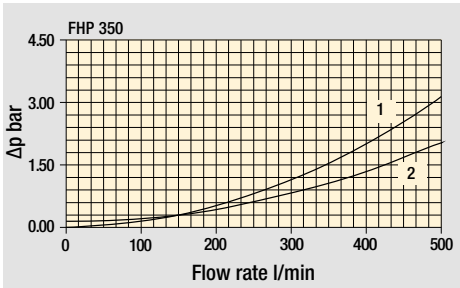

Pressure drop with reverse flow valve in
1 - Filtering direction
2 - Opposite direction

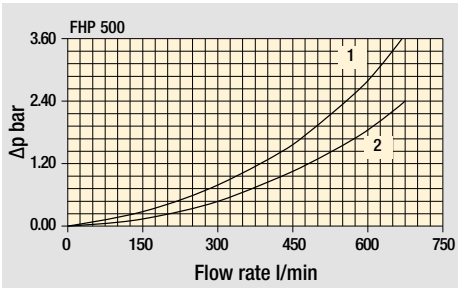

Pressure drop with reverse flow valve in
1 - Opposite direction
2 - Filtering direction

The curves are plotted using mineral oil with density of 0.86 kg/dm^3 in compliance with ISO 3968. Δp varies proportionally with density.

Designation & Ordering code

COMPLETE FILTER

Configuration example: FHP010 | 2 | B | A | B | 2 | A03 | N | P01

Series and size
FHP010 | **FHP011**

Length
1 | **2** | **3** | **4**

Valves
S Without bypass
B With bypass 6 bar
V With reverse flow, without bypass
Z With reverse flow, with bypass 6 bar

Seals
A NBR
V FPM

Connections
A G 1/4”
B 1/4” NPT
C SAE 5 - 1/2” - 20 UNF
D G 3/8”
E 3/8” NPT
F SAE 6 - 9/16” - 18 UNF

Connection for differential indicator
1 Without
2 With connection

Filtration rating (filter media)

A03	Inorganic microfiber	3 µm	**A16**	Inorganic microfiber	16 µm
A06	Inorganic microfiber	6 µm	**A25**	Inorganic microfiber	25 µm
A10	Inorganic microfiber	10 µm	**M25**	Wire mesh	25 µm

Element Δp		Valves S	B	V	Z
N	20 bar		•		•
H	210 bar	•		•	

Execution	
P01	MP Filtri standard
Pxx	Customized

FILTER ELEMENT

Configuration example: HP011 | 2 | A03 | A | N | P01

Element series and size
HP011

Element length
1 | **2** | **3** | **4**

Filtration rating (filter media)

A03	Inorganic microfiber	3 µm	**A16**	Inorganic microfiber	16 µm
A06	Inorganic microfiber	6 µm	**A25**	Inorganic microfiber	25 µm
A10	Inorganic microfiber	10 µm	**M25**	Wire mesh	25 µm

Seals
A NBR
V FPM

Element Δp	
N	20 bar
H	210 bar

Execution	
P01	MP Filtri standard
Pxx	Customized

ACCESSORIES

Differential indicators		page
DEA	Electrical differential indicator	577
DEH	Hazardous area electronic differential indicator	577-578
DEM	Electrical differential indicator	578-579
DLA	Electrical / visual differential indicator	579-580
DLE	Electrical / visual differential indicator	580
DTA	Electronic differential indicator	581
DVA	Visual differential indicator	581
DVM	Visual differential indicator	581

Additional features		page
T2	Plug	582

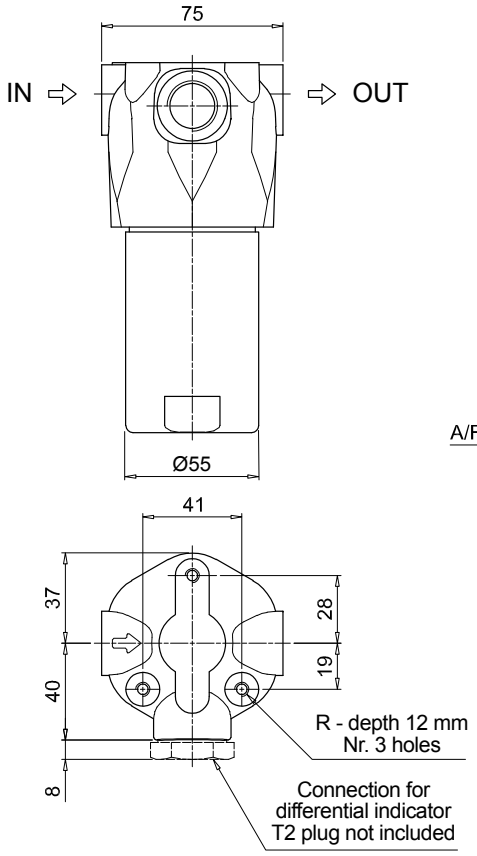

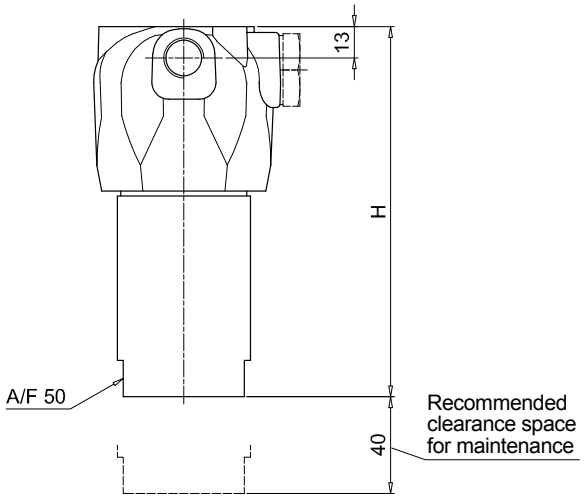

FHP010

Filter length	H [mm]
1	92
2	103
3	153
4	203

Connections	R
A	M6
B - C	1/4" UNC
D	M6
E - F	1/4" UNC

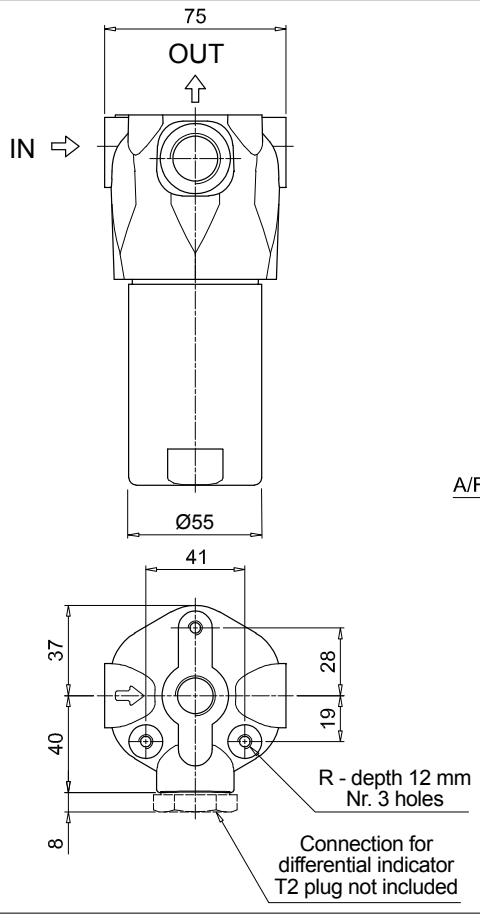

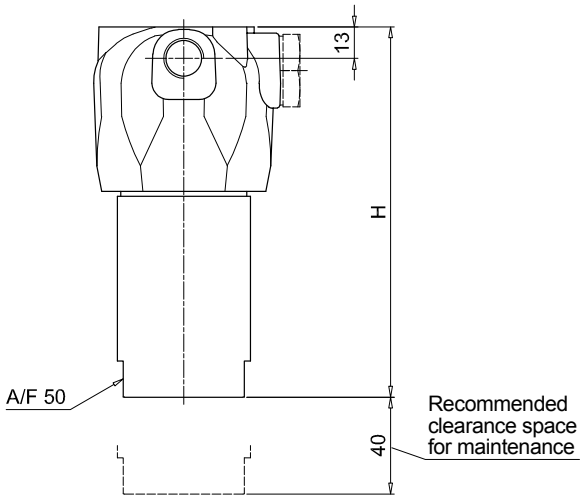

FHP011

Filter length	H [mm]
1	92
2	103
3	153
4	203

Connections	R
A	M6
B - C	1/4" UNC
D	M6
E - F	1/4" UNC

Designation & Ordering code

COMPLETE FILTER

Configuration example: FHP135 | 2 | B | A | G3 | A06 | S | P01

Series and size

FHP065 | **FHP135**

Length

1
2
3

Valves

S Without bypass
B With bypass 6 bar
T With check valve, without bypass

Seals

A NBR
V FPM

Connections	FHP065	FHP135
G1	G 1/2”	G 3/4”
G2	G 3/4”	G 1”
G3	1/2” NPT	3/4” NPT
G4	3/4” NPT	1” NPT
G5	SAE 8 - 3/4” - 16 UNF	SAE 12 - 1 1/16” - 12 UN
G6	SAE 12 - 1 1/16” - 12 UN	SAE 16 - 1 5/16” - 12 UN
F1	-	3/4” SAE 3000 psi/M
F2	-	1” SAE 3000 psi/M
F3	-	3/4” SAE 3000 psi/UNC
F4	-	1” SAE 3000 psi/UNC
F5	-	3/4” SAE 6000 psi/M
F6	-	3/4” SAE 6000 psi/UNC

Filtration rating (filter media)

A03	Inorganic microfiber	3 µm
A06	Inorganic microfiber	6 µm
A10	Inorganic microfiber	10 µm
A16	Inorganic microfiber	16 µm
A25	Inorganic microfiber	25 µm
M25	Wire mesh	25 µm

Valves

Element Δp		S	B	T	D	V	Z
N	20 bar		•				
R	20 bar				•		•
H	210 bar	•					
S	210 bar			•		•	

Execution

P01 MP Filtri standard
Pxx Customized

FILTER ELEMENT

Configuration example: HP135 | 2 | A06 | A | S | P01

Element series and size

HP065 | **HP135**

Element length

1
2
3

Filtration rating (filter media)

A03	Inorganic microfiber	3 µm
A06	Inorganic microfiber	6 µm
A10	Inorganic microfiber	10 µm
A16	Inorganic microfiber	16 µm
A25	Inorganic microfiber	25 µm
M25	Wire mesh	25 µm

Seals

A NBR
V FPM

Element Δp

N 20 bar
R 20 bar
H 210 bar
S 210 bar

Execution

P01 MP Filtri standard
Pxx Customized

ACCESSORIES

Differential indicators

		page
DEA	Electrical differential indicator	577
DEH	Hazardous area electronic differential indicator	577-578
DEM	Electrical differential indicator	578-579
DLA	Electrical / visual differential indicator	579-580
DLE	Electrical / visual differential indicator	580
DTA	Electronic differential indicator	581
DVA	Visual differential indicator	581
DVM	Visual differential indicator	581

Additional features

		page
T2	Plug	582

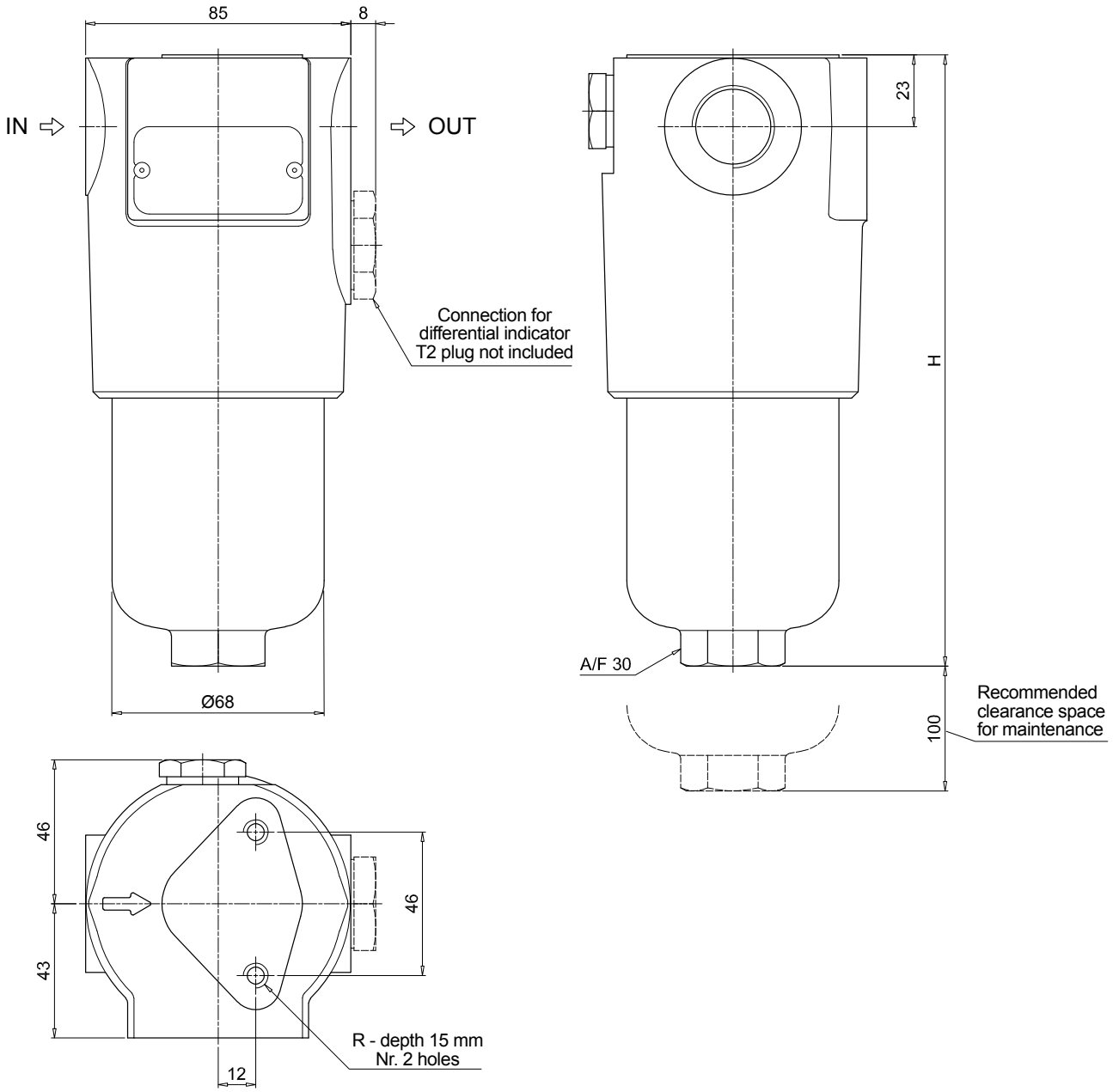

FHP065	
Filter length	**H [mm]**
1	196
2	227
3	329

Connections	**R**
G1-G2	M8
G3-G4-G5-G6	5/16" UNC

Dimensions

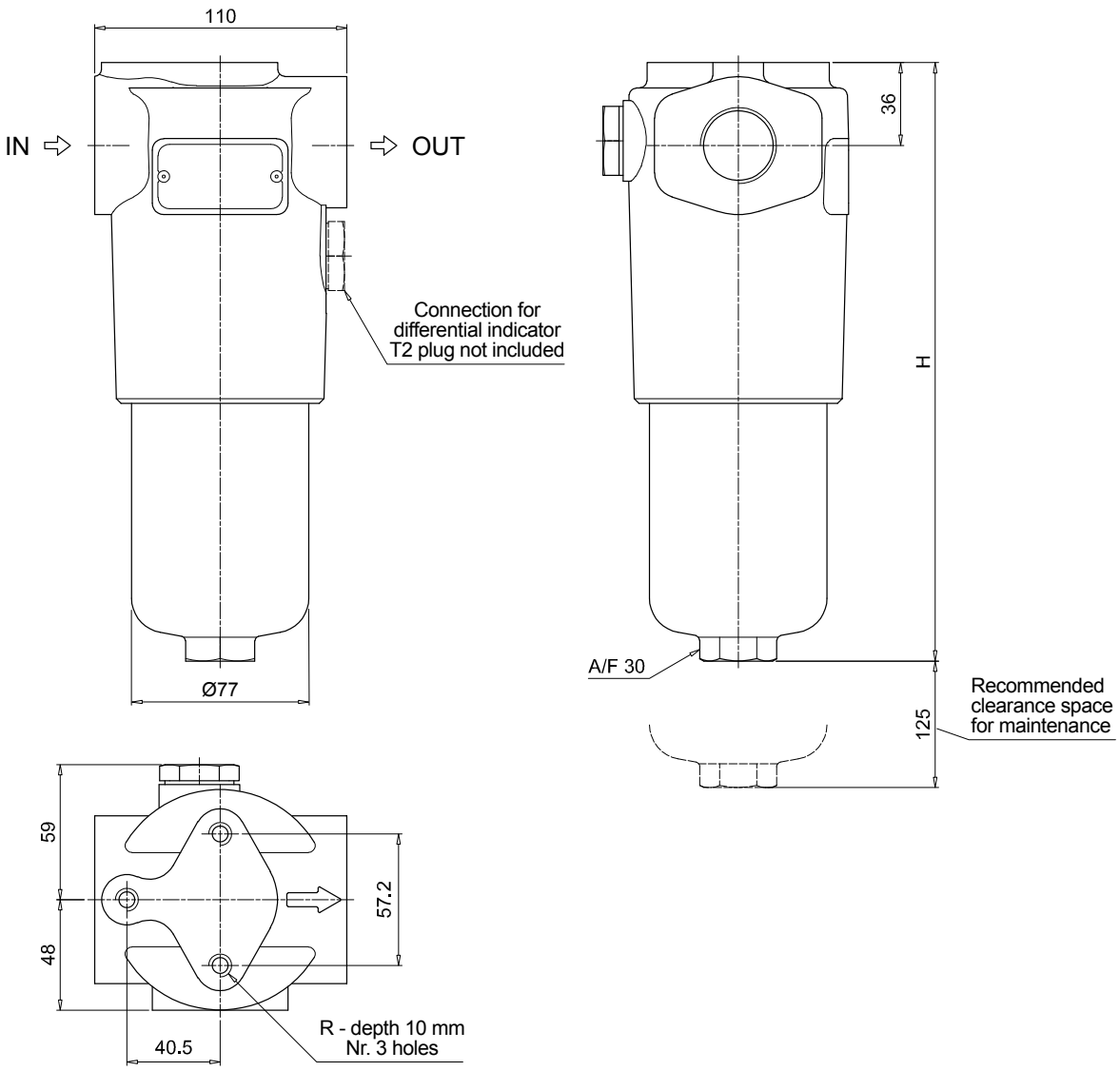

FHP135	
Filter length	**H [mm]**
1	260
2	373
3	448

Connections	**R**
G1-G2	M10
G3-G4-G5-G6	3/8" UNC
F1-F2	M10
F3-F4	3/8" UNC
F5	M10
F6	3/8" UNC

Designation & Ordering code

COMPLETE FILTER

Configuration example: FHP350 | 4 | B | A | D | 2 | A06 | N | P01

Series and size
FHP350

Length
1 | **2** | **3** | **4**

Valves

S	Without bypass
B	With bypass 6 bar
T	With check valve, without bypass
D	With check valve, with bypass 6 bar
V	With reverse flow, without bypass
Z	With reverse flow, with bypass 6 bar

Seals

A	NBR
V	FPM

Connections

A	G 1 1/2”
B	1 1/2” NPT
C	SAE 24 - 1 7/8” - 12 UN
D	1 1/2” SAE 3000 psi/M + G 1 1/4”
E	1 1/2” SAE 3000 psi/UNC + 1 1/4” NPT
F	1 1/2” SAE 3000 psi/UNC + SAE 20 - 1 5/8” - 12 UN
G	1 1/4” SAE 3000 psi/M
H	1 1/4” SAE 3000 psi/UNC
I	1 1/4” SAE 6000 psi/M
L	1 1/4” SAE 6000 psi/UNC

Connection for differential indicator

2	With connection

Filtration rating (filter media)

A03	Inorganic microfiber	3 µm
A06	Inorganic microfiber	6 µm
A10	Inorganic microfiber	10 µm
A16	Inorganic microfiber	16 µm
A25	Inorganic microfiber	25 µm
M25	Wire mesh	25 µm

Valves

Element Δp	S	B	T	D	V	Z
N 20 bar		•				
R 20 bar				•		•
H 210 bar	•					
S 210 bar			•		•	

Filter length

Execution	1	2	3	4
P01 MP Filtri standard	•	•	•	•
P02 Maintenance from the bottom of the housing				•
Pxx Customized				

FILTER ELEMENT

Configuration example: HP320 | 4 | A06 | A | N | P01

Element series and size
HP320

Element length
1 | **2** | **3** | **4**

Filtration rating (filter media)

A03	Inorganic microfiber	3 µm
A06	Inorganic microfiber	6 µm
A10	Inorganic microfiber	10 µm
A16	Inorganic microfiber	16 µm
A25	Inorganic microfiber	25 µm
M25	Wire mesh	25 µm

Seals

A	NBR
V	FPM

Element Δp

N	20 bar
R	20 bar
H	210 bar
S	210 bar

Execution

P01	MP Filtri standard
Pxx	Customized

ACCESSORIES

Differential indicators

		page
DEA	Electrical differential indicator	577
DEH	Hazardous area electronic differential indicator	577-578
DEM	Electrical differential indicator	578-579
DLA	Electrical / visual differential indicator	579-580
DLE	Electrical / visual differential indicator	580
DTA	Electronic differential indicator	581
DVA	Visual differential indicator	581
DVM	Visual differential indicator	581

Additional features

		page
T2	Plug	582

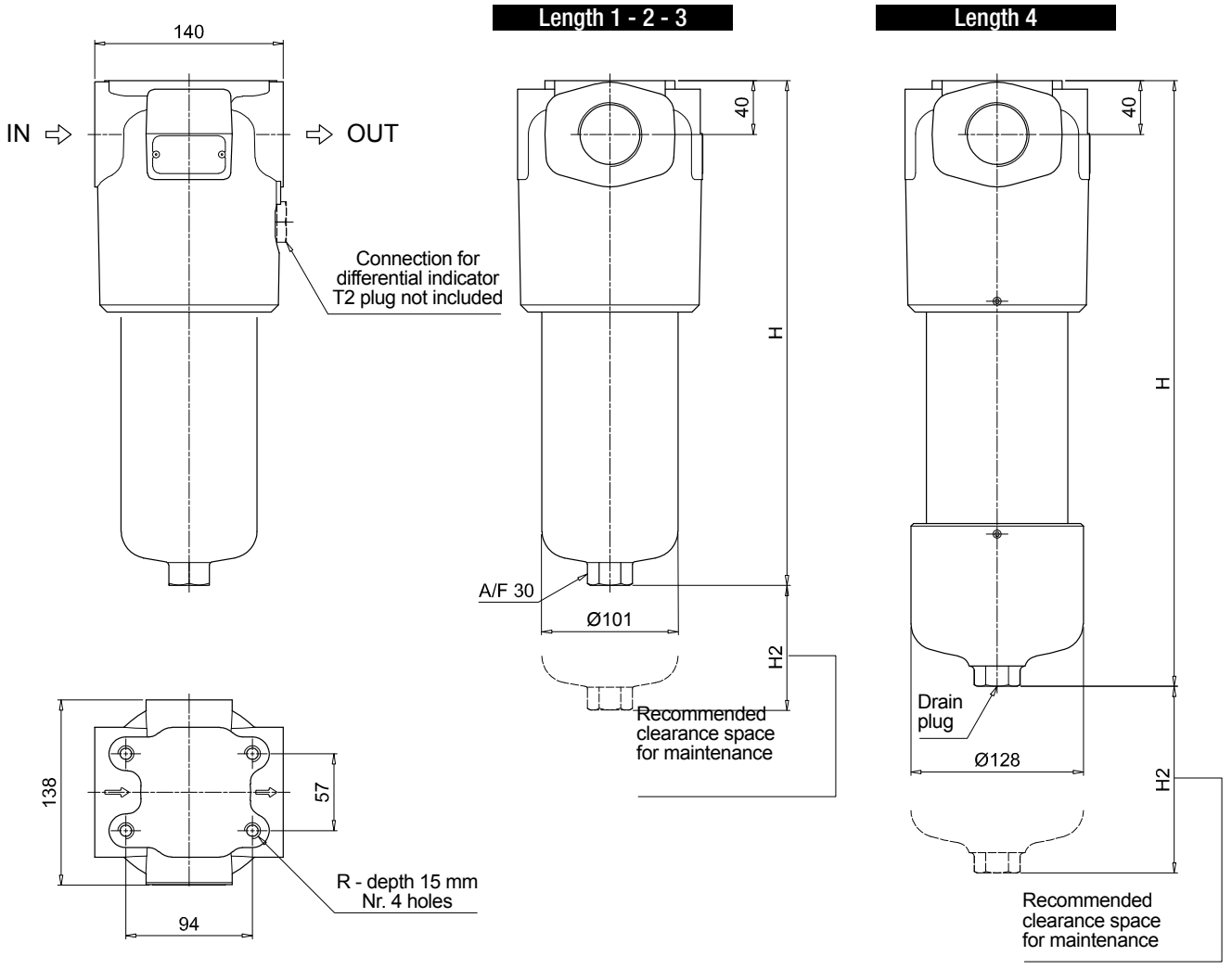

FHP350

Filter length	H [mm]	H2 [mm] Execution P01	P02
1	295	150	-
2	418	150	-
3	550	150	-
4	703	150	550

Connections	R
A	M12
B - C	1/2" UNC
D	M12
E - F	1/2" UNC
G	M12
H	1/2" UNC
I	M12
L	1/2" UNC

Designation & Ordering code

COMPLETE FILTER

Configuration example: FHP500 | 4 | V | A | F1 | A06 | S | P01

Series and size
FHP500

Length
1 | **2** | **3** | **4** | **5**

Valves

S	Without bypass
B	With bypass 6 bar
T	With check valve, without bypass
D	With check valve, with bypass 6 bar
V	With reverse flow, without bypass
Z	With reverse flow, with bypass 6 bar

Seals

A	NBR
V	FPM

Connections

F1	1 1/2” SAE 3000 psi/M
F2	1 1/2” SAE 3000 psi/UNC
F3	2” SAE 3000 psi/M
F4	2” SAE 3000 psi/UNC + 1 1/2” NPT
F5	1 1/2” SAE 6000 psi/M
F6	1 1/2” SAE 6000 psi/UNC
F7	2” SAE 6000 psi/M + G 1 1/2”
F8	2” SAE 6000 psi/UNC + SAE 24 - 1 7/8” - 12 UN

Filtration rating (filter media)

A03	Inorganic microfiber	3 µm
A06	Inorganic microfiber	6 µm
A10	Inorganic microfiber	10 µm
A16	Inorganic microfiber	16 µm
A25	Inorganic microfiber	25 µm
M25	Wire mesh	25 µm

Element Δp		Valves S	B	T	D	V	Z
N	20 bar		•				
R	20 bar				•		•
S	210 bar	•		•		•	

Execution		Filter length 1	2	3	4	5
P01	MP Filtri standard	•	•	•	•	•
P02	Maintenance from the bottom of the housing				•	•
P03	Drain plug	•	•			
Pxx	Customized	•	•	•	•	•

FILTER ELEMENT

Configuration example: HP500 | 4 | A06 | A | S | P01

Element series and size
HP500

Element length
1 | **2** | **3** | **4** | **5**

Filtration rating (filter media)

A03	Inorganic microfiber	3 µm
A06	Inorganic microfiber	6 µm
A10	Inorganic microfiber	10 µm
A16	Inorganic microfiber	16 µm
A25	Inorganic microfiber	25 µm
M25	Wire mesh	25 µm

Seals

A	NBR
V	FPM

Element Δp

N	20 bar
R	20 bar
S	210 bar

Execution

P01	MP Filtri standard
Pxx	Customized

ACCESSORIES

Differential indicators

		page
DEA	Electrical differential indicator	577
DEH	Hazardous area electronic differential indicator	577-578
DEM	Electrical differential indicator	578-579
DLA	Electrical / visual differential indicator	579-580
DLE	Electrical / visual differential indicator	580
DTA	Electronic differential indicator	581
DVA	Visual differential indicator	581
DVM	Visual differential indicator	581

Additional features

		page
T2	Plug	582

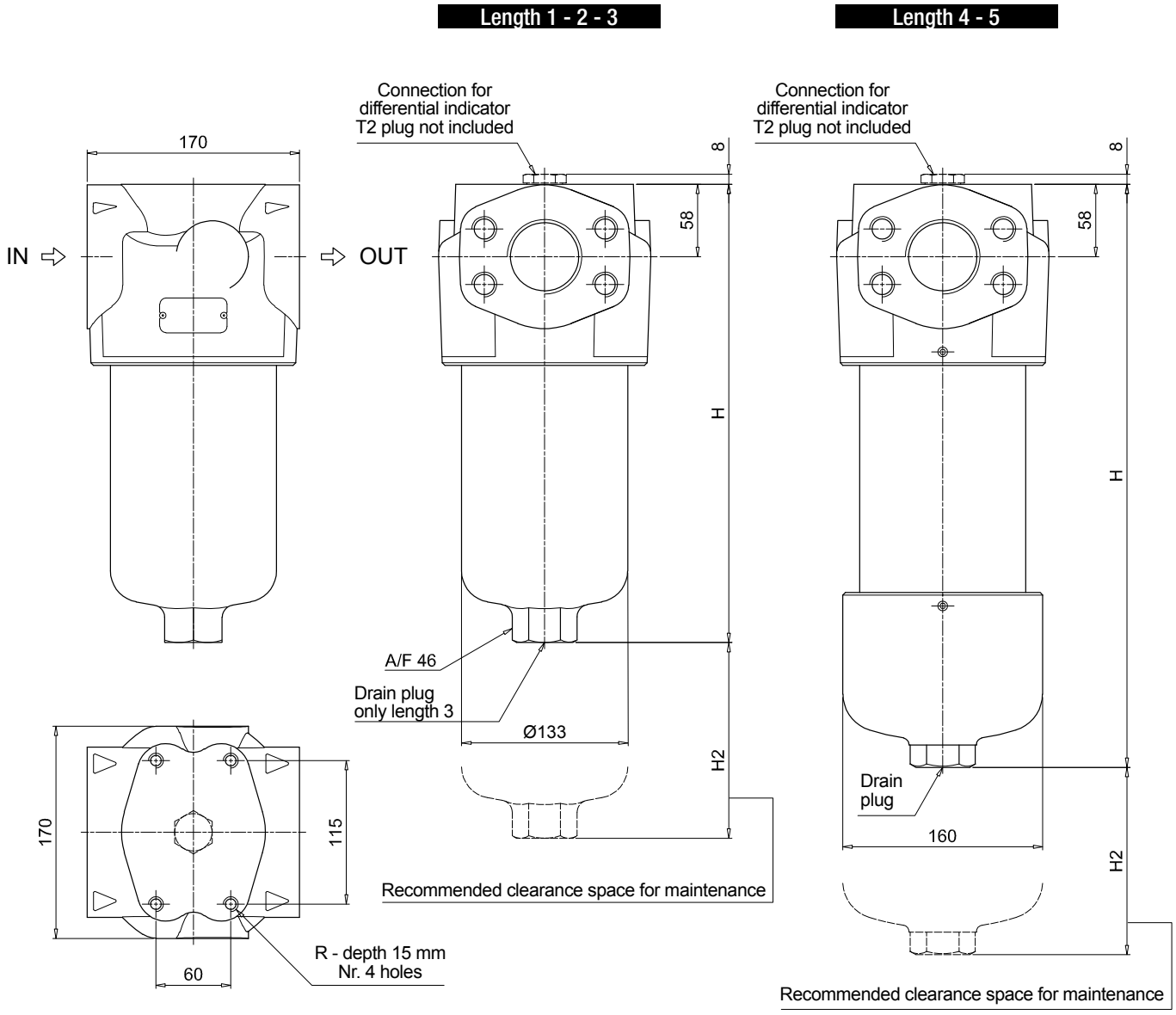

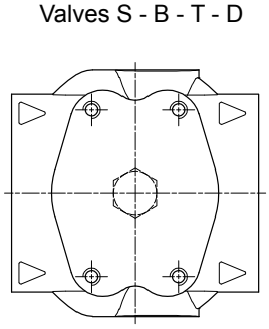

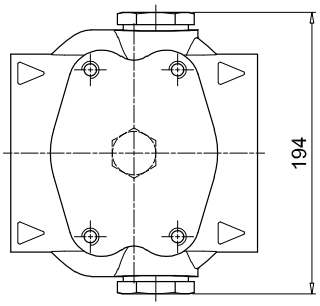

FHP500			
Filter length	H [mm]	H2 [mm] Execution P01	P02
1	330	150	-
2	420	150	-
3	496	150	-
4	654	150	480
5	820	150	650

Connections	R
F1	M12
F2	1/2" UNC
F3	M12
F4	1/2" UNC
F5	M12
F6	1/2" UNC
F7	M12
F8	1/2" UNC

Order number for spare parts

FHP 010 - 011

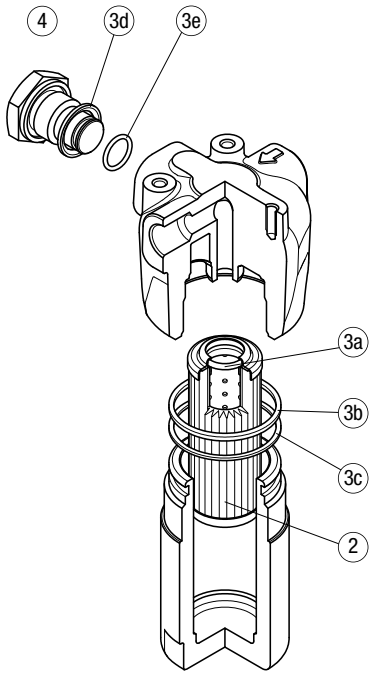

Q.ty:
nr. 0 pcs. for version 1 (without indicator port)
nr. 1 pc. for version 2 (with indicator port)

Item:	Q.ty: 1 pc. 2	Q.ty: 1 pc. 3 (3a ÷ 3e)		4	
Filter series	Filter element	Seal Kit code number NBR	Seal Kit code number FPM	Indicator connection plug NBR	Indicator connection plug FPM
FHP 010-011	See order table	02050501	02050492	T2H	T2V

FHP 065

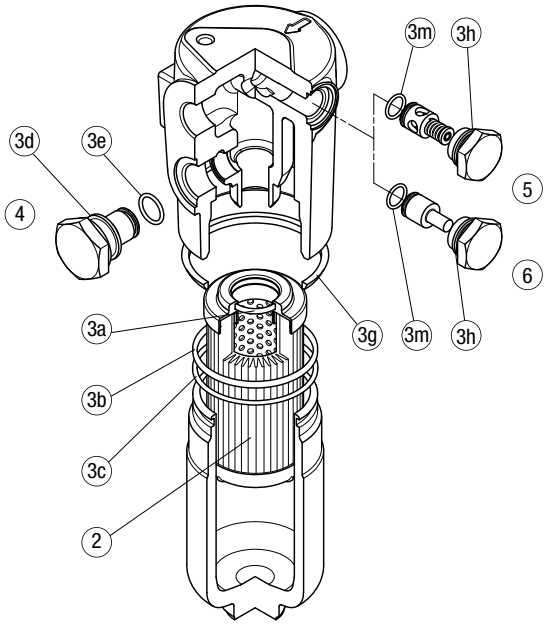

FHP 135

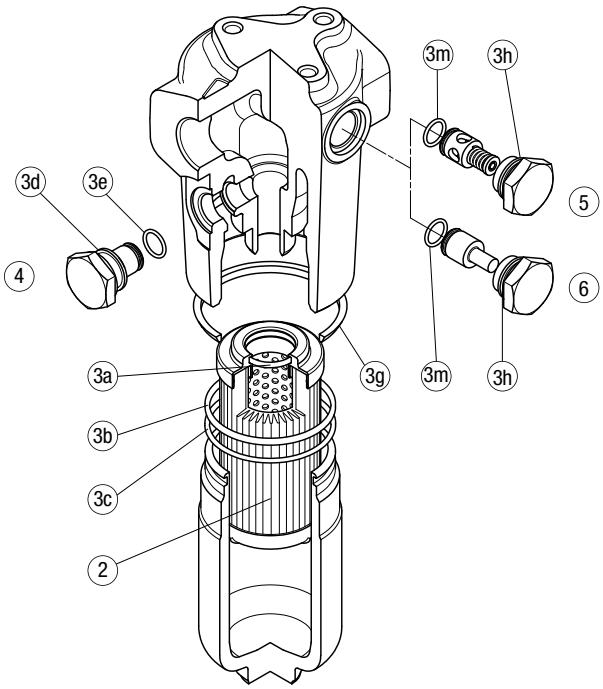

Item:	Q.ty: 1 pc. 2	Q.ty: 1 pc. 3 (3a ÷ 3m)		Q.ty: 1 pc. 4		Q.ty: 1 pc. 5		Q.ty: 1 pc. 6	
Filter series	Filter element	Seal Kit code number NBR	Seal Kit code number FPM	Indicator connection plug NBR	Indicator connection plug FPM	Bypass assembly NBR	Bypass assembly FPM	Non-bypass assembly NBR	Non-bypass assembly FPM
FHP 065	See order table	02050265	02050276	T2H	T2V	02001116	02001136	02001142	02001139
FHP 135		02050269	02050280			02001117	02001137	02001143	02001392

Order number for spare parts

FHP 350

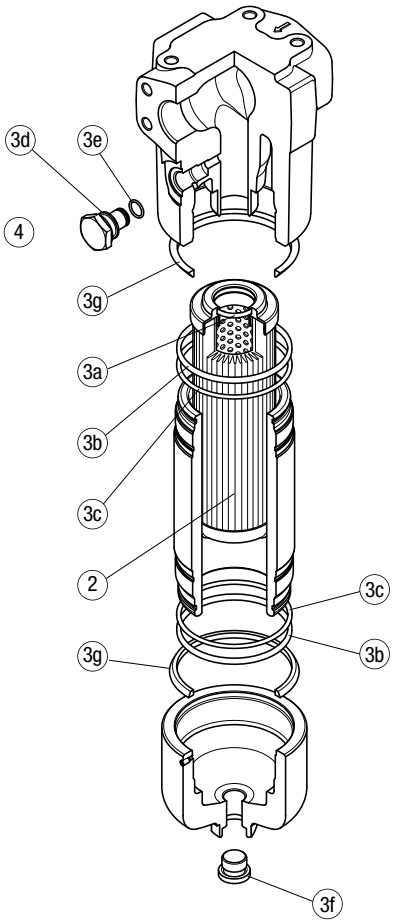

FHP 500

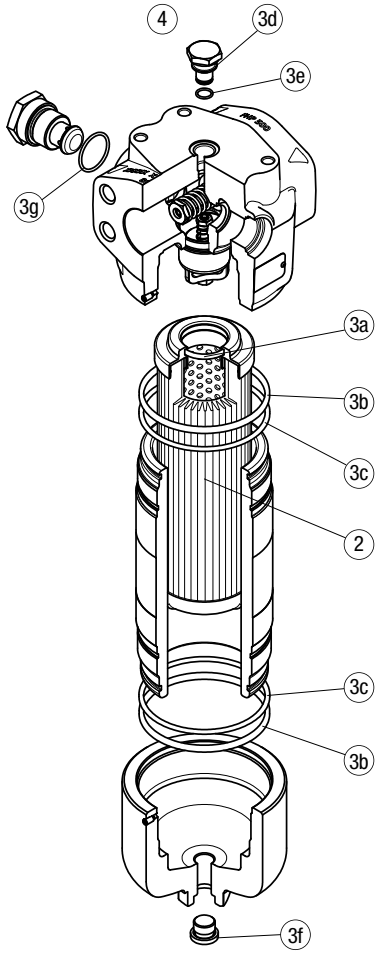

Item:	Q.ty: 1 pc. 2	Q.ty: 1 pc. 3 (3a ÷ 3g for FHP 350) (3a ÷ 3f for FHP 500)		Q.ty: 1 pc. 4	
Filter series	Filter element	Seal Kit code number NBR	Seal Kit code number FPM	Indicator connection plug NBR	Indicator connection plug FPM
FHP 350	See order table	02050272	02050283	T2H	T2V
FHP 500		02050330	02050331		

FMM series

Maximum working pressure up to 42 MPa (420 bar) - Flow rate up to 300 l/min



FMM GENERAL INFORMATION

Description

High Pressure filters

In-line
Maximum working pressure up to 42 MPa (420 bar)
Flow rate up to 300 l/min

FMM is a range of versatile high pressure filter for protection of sensitive components in high pressure hydraulic systems in the mobile machines.
They are directly connected to the lines of the system through the hydraulic fittings.

Available features:
- Female threaded connections up to 1 1/4", for a maximum flow rate of 250 l/min
- Fine filtration rating, to get a good cleanliness level into the system
- Bypass valve, to relieve excessive pressure drop across the filter media
- Low collapse filter element "N", for use with filters provided with bypass valve
- Low collapse filter element with external support "R", for filter element protection against the back pressure caused by the check valve in filters provided with the bypass valve
- High collapse filter element with external support "S", for filter element protection against the back pressure caused by the check valve in filters not provided with the bypass valve
- Visual, electrical and electronic differential clogging indicators

Common applications:
- Agricultural machines
- Mobile machines

Technical data

Filter housing materials
- Head: Painted cast iron, black RAL 9005
- Housing: Phosphatized steel
- Bypass valve: Steel

Pressure
- Test pressure: 63 MPa (630 bar)
- Burst pressure: 126 MPa (1260 bar)
- Pulse pressure fatigue test: 1 000 000 cycles with pressure from 0 to 42 MPa (420 bar)

Bypass valve
- Opening pressure 600 kPa (6 bar) ±10%
- Other opening pressures on request.

Δp element type
- Microfiber filter elements - series N-R: 20 bar
- Microfiber filter elements - series S: 210 bar
- Wire mesh filter elements - series N: 20 bar
- Fluid flow through the filter element from OUT to IN

Seals
- Standard NBR series A
- Optional FPM series V

Temperature
From -25 °C to +110 °C

Connections
In-line Inlet/Outlet

Note
FMM filters are provided for vertical mounting



Weights [kg] and volumes [dm³]

Filter series	Weights [kg]						Volumes [dm³]					
	Length	1	2	3	4	5	Length	1	2	3	4	5
FMM 050		3.11	3.48	3.90	4.36	5.54		0.34	0.48	0.63	0.81	1.23
FMM 150		7.50	9.50	10.90	-	-		0.60	1.00	1.25	-	-

FILTER ASSEMBLY SIZING
Flow rates [l/min]

		Filter element design - N Series						Filter element design - S Series				
Filter series	Length	A03	A06	A10	A16	A25	M25	A03	A06	A10	A16	A25
FMM 050	1	42	43	79	82	106	147	29	39	57	59	74
	2	52	57	85	96	121	149	45	49	76	88	114
	3	66	69	97	106	130	150	58	61	89	99	125
	4	83	89	113	115	134	152	74	80	106	108	129
	5	107	110	130	134	141	154	93	95	111	121	139
FMM 150	1	81	88	156	163	179	295					
	2	142	145	227	230	236	312					
	3	170	180	242	245	263	315					

Maximum flow rate for a complete pressure filter with a pressure drop Δp = 1.5 bar.

The reference fluid has a kinematic viscosity of 30 mm^2/s (cSt) and a density of 0.86 kg/dm^3.

For different pressure drop or fluid viscosity we recommend to use our selection software available on www.mpfiltri.com.

You can also calculate the right size using the formulas present on the FILTER SIZING paragraph at the beginning of the full catalogue or at the beginning of the filter family brochure.

Please, contact our Sales Department for further additional information.

Hydraulic symbols

Filter series	Style S	Style B	Style T	Style D
FMM 050	•	•	•	•
FMM 150	•	•		

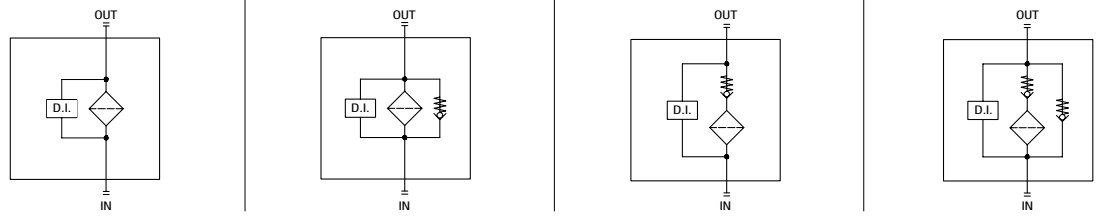

Pressure drop

Filter housings
Δp pressure drop

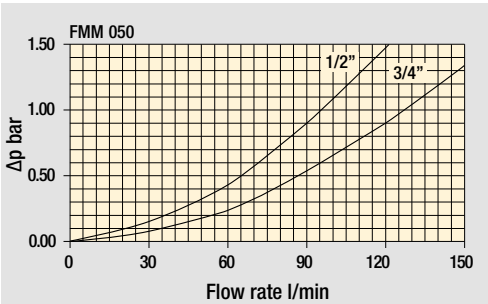

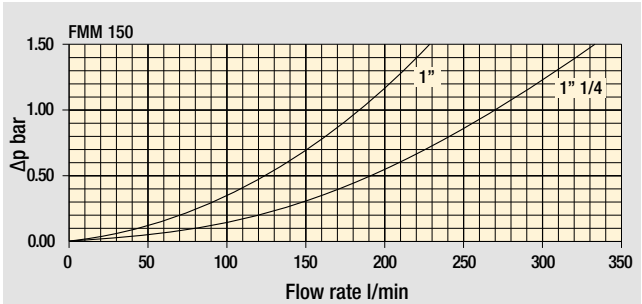

Bypass valve
pressure drop

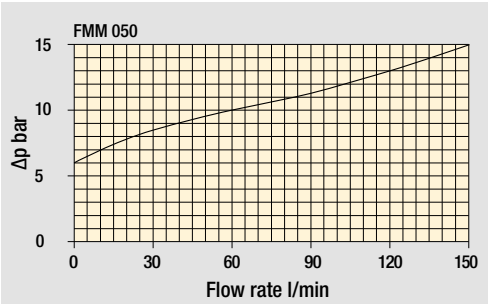

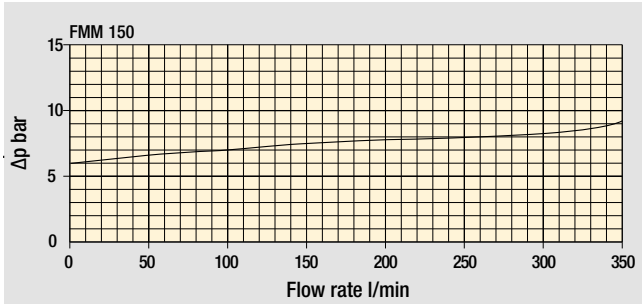

Valves

Filter housing
with check valve

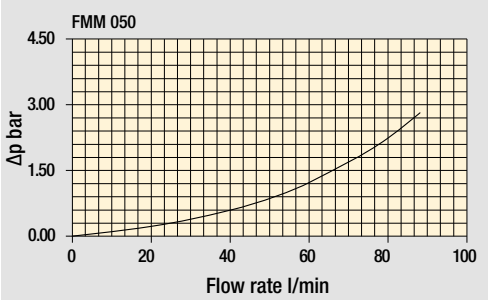

The curves are plotted using mineral oil with density of 0.86 kg/dm^3 in compliance with ISO 3968. Δp varies proportionally with density.

FMM FMM050

Designation & Ordering code

COMPLETE FILTER

Configuration example: FMM050 | 3 | B | A | G | A10 | N | P01

Series and size
FMM050

Length
1 | **2** | **3** | **4** | **5**

Valves

S	Without bypass
B	With bypass 6 bar
T	With check valve, without bypass
D	With check valve, with bypass 6 bar

Seals

A	NBR
V	FPM

Connections

A	M18x1.5 - ISO 6149
B	M22x1.5 - ISO 6149
C	G 1/2”
D	G 3/4”
E	1/2” NPT
F	3/4” NPT
G	SAE 8 - 3/4” - 16 UNF
H	SAE 12 - 1 1/16” - 12 UN

Filtration rating (filter media)

A03	Inorganic microfiber	3 µm
A06	Inorganic microfiber	6 µm
A10	Inorganic microfiber	10 µm
A16	Inorganic microfiber	16 µm
A25	Inorganic microfiber	25 µm
M25	Wire mesh	25 µm

Element Δp		Valves S	B	T	D
N	20 bar		•		
R	20 bar				•
S	210 bar	•		•	

Execution

P01	Upper connection for clogging indicator
P02	Without connection for clogging indicator
P03	Frontal connection for clogging indicator
Pxx	Customized

FILTER ELEMENT

Configuration example: HP050 | 3 | A10 | A | N | P01

Element series and size
HP050

Element length
1 | **2** | **3** | **4** | **5**

Filtration rating (filter media)

A03	Inorganic microfiber	3 µm
A06	Inorganic microfiber	6 µm
A10	Inorganic microfiber	10 µm
A16	Inorganic microfiber	16 µm
A25	Inorganic microfiber	25 µm
M25	Wire mesh	25 µm

Seals

A	NBR
V	FPM

Element Δp

N	20 bar
R	20 bar
S	210 bar

Execution

P01	MP Filtri standard
Pxx	Customized

ACCESSORIES

Differential indicators

		page
DEA	Electrical differential indicator	577
DEH	Hazardous area electronic differential indicator	577-578
DEM	Electrical differential indicator	578-579
DLA	Electrical / visual differential indicator	579-580
DLE	Electrical / visual differential indicator	580
DTA	Electronic differential indicator	581
DVA	Visual differential indicator	581
DVM	Visual differential indicator	581

Additional features

		page
T2	Plug	582

FMM050

Filter length	H [mm]
1	158
2	195
3	237
4	285
5	407

Connections	R
A-B-C-D	M10
E-F-G-H	3/8" UNC

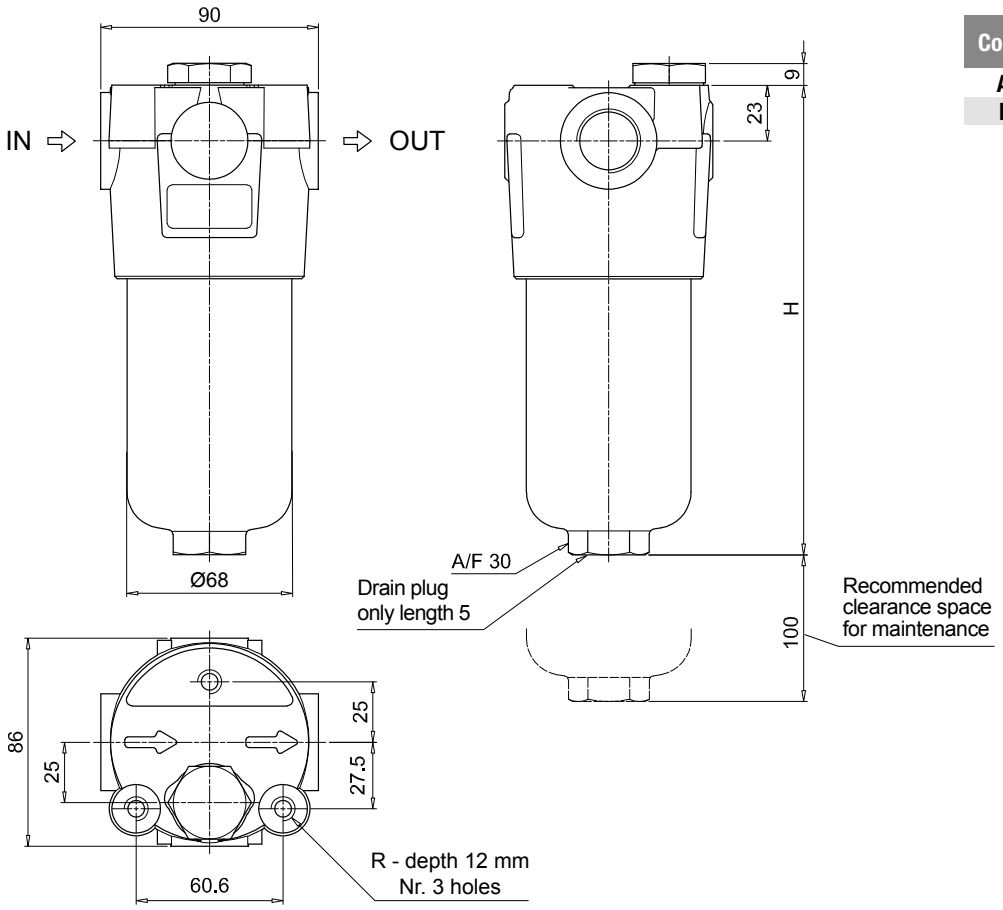

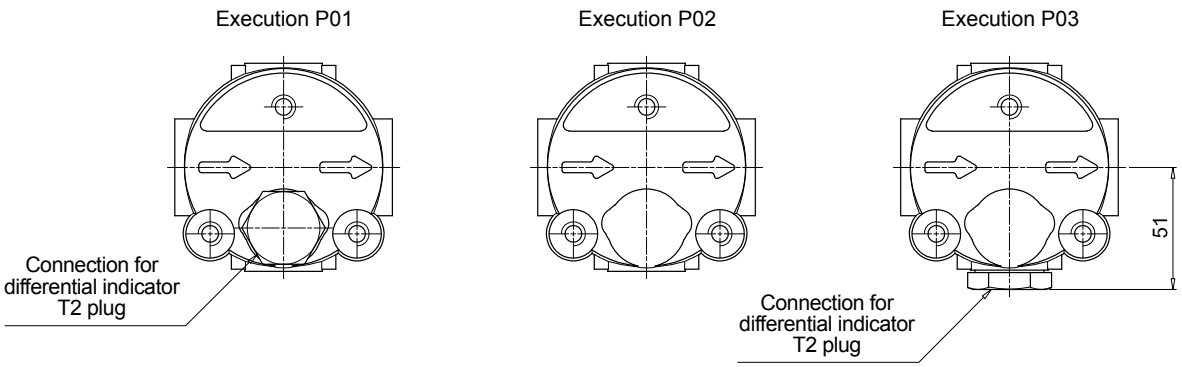

FMM FMM150

Designation & Ordering code

COMPLETE FILTER

Configuration example: FMM150 | 2 | B | A | D | 2 | M25 | N | P01

Series and size
FMM150

Length
1 | **2** | **3**

Valves
S Without bypass
B With bypass 6 bar

Seals
A NBR
V FPM

Connections
C G 1”
D G 1 1/4”
E 1” NPT
F 1 1/4” NPT
G SAE 16 - 1 5/16” - 12 UN
H SAE 20 - 1 5/8” - 12 UN

Connection for differential indicator
1 Without connection
2 Upper connection
3 Frontal connection

Filtration rating (filter media)

A03	Inorganic microfiber	3 µm	**A16**	Inorganic microfiber	16 µm
A06	Inorganic microfiber	6 µm	**A25**	Inorganic microfiber	25 µm
A10	Inorganic microfiber	10 µm	**M25**	Wire mesh	25 µm

Element Δp
N 20 bar

Execution
P01 MP Filtri standard
Pxx Customized

FILTER ELEMENT

Configuration example: HP150 | 2 | M25 | A | N | P01

Element series and size
HP150

Element length
1 | **2** | **3**

Filtration rating (filter media)

A03	Inorganic microfiber	3 µm	**A16**	Inorganic microfiber	16 µm
A06	Inorganic microfiber	6 µm	**A25**	Inorganic microfiber	25 µm
A10	Inorganic microfiber	10 µm	**M25**	Wire mesh	25 µm

Seals
A NBR
V FPM

Element Δp
N 20 bar

Execution
P01 MP Filtri standard
Pxx Customized

ACCESSORIES

Differential indicators

		page
DEA	Electrical differential indicator	577
DEH	Hazardous area electronic differential indicator	577-578
DEM	Electrical differential indicator	578-579
DLA	Electrical / visual differential indicator	579-580
DLE	Electrical / visual differential indicator	580
DTA	Electronic differential indicator	581
DVA	Visual differential indicator	581
DVM	Visual differential indicator	581

Additional features

		page
T2	Plug	582

FMM150	
Filter length	**H [mm]**
1	230
2	340
3	415

Connections	**R**
C-D	M10
E-F-G-H	3/8" UNC

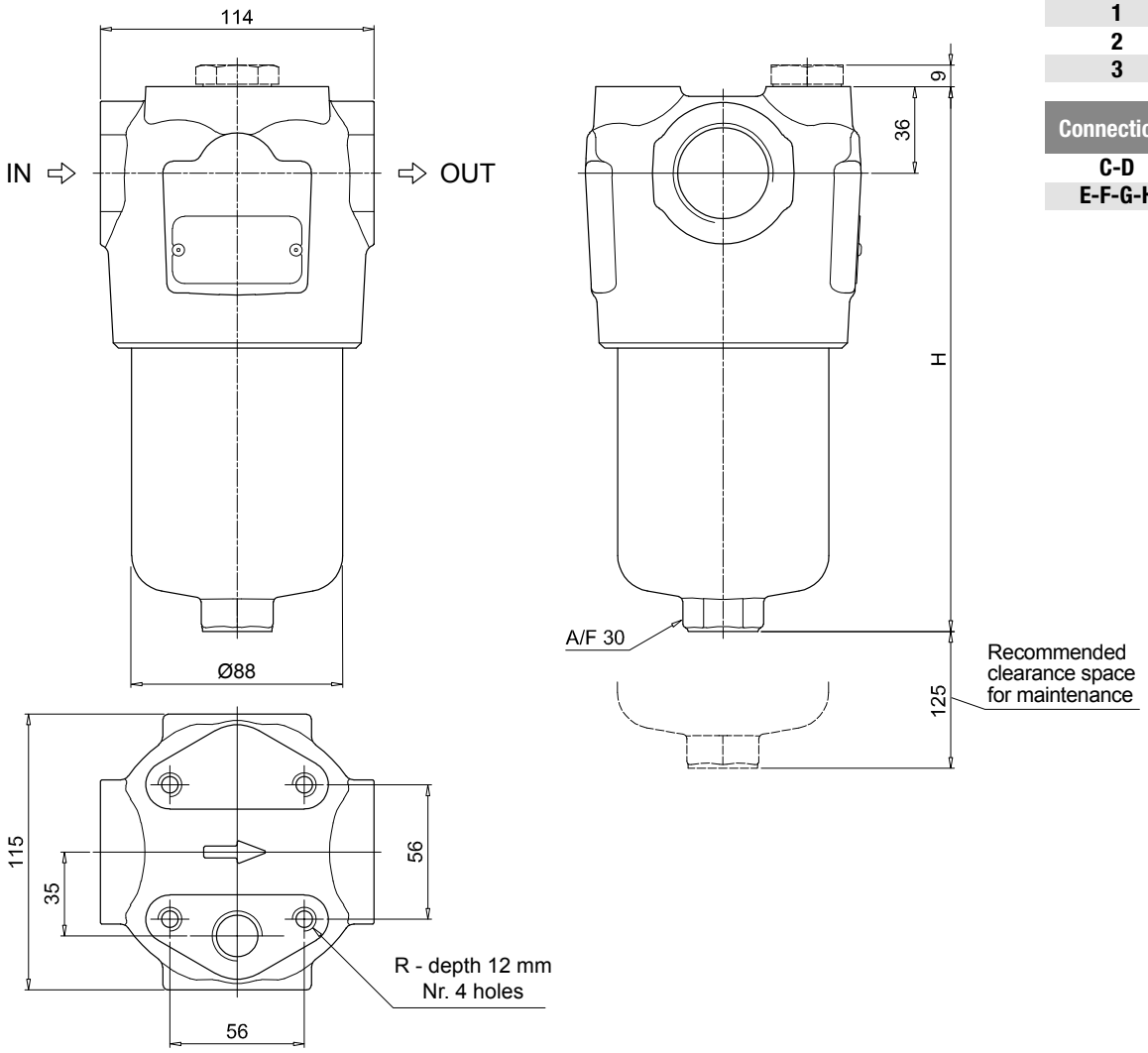

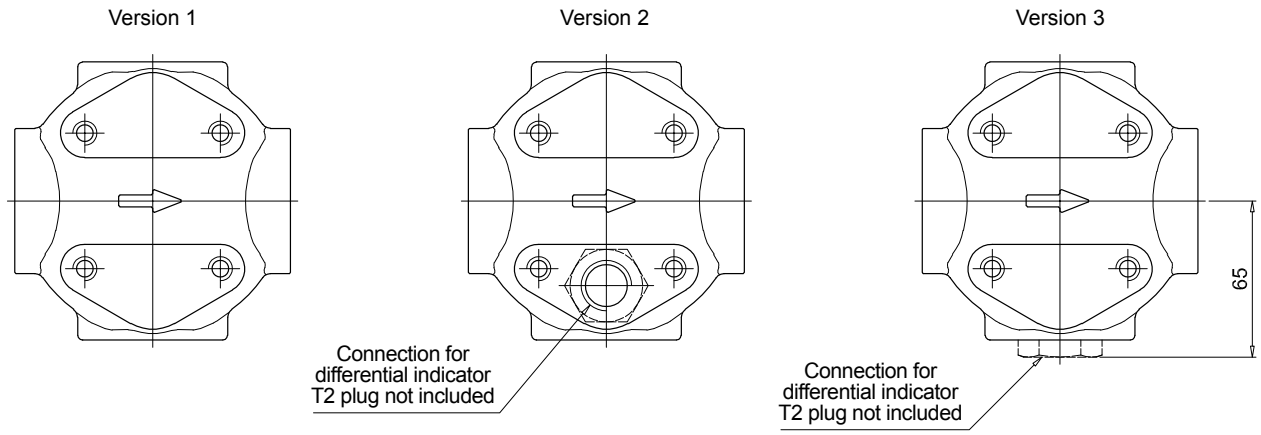

FMM SPARE PARTS

Order number for spare parts

FMM 050

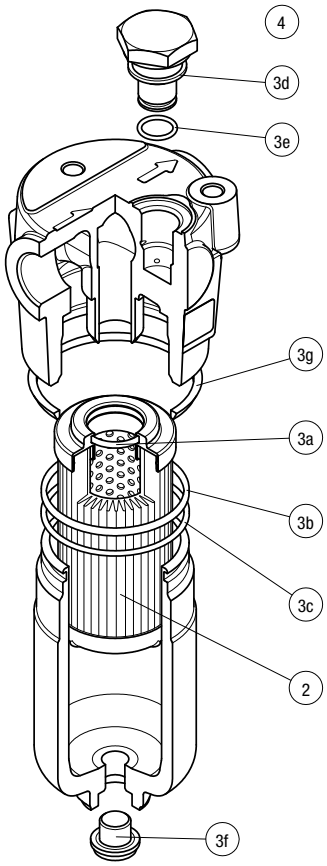

Item:	Q.ty: 1 pc. 2	Q.ty: 1 pc. 3 (3a ÷ 3g)		Q.ty: 1 pc. 4	
Filter series	Filter element	Seal Kit code number NBR	FPM	Indicator connection plug NBR	FPM
FMM 050	See order table	02050314	02050315	T2H	T2V

FMM 150

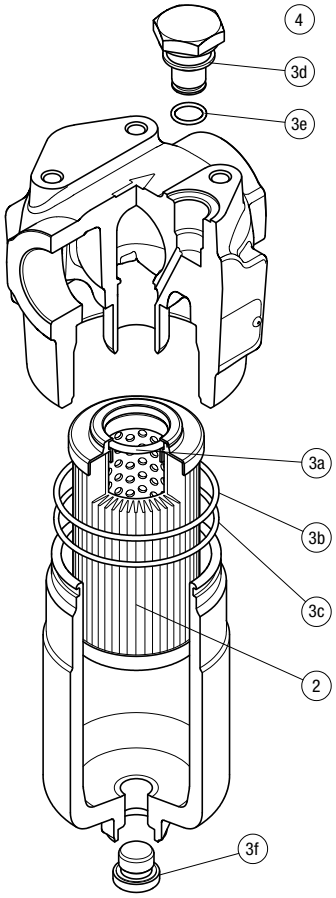

Item:	Q.ty: 1 pc. 2	Q.ty: 1 pc. 3 (3a ÷ 3f)		Q.ty: 1 pc. 4	
Filter series	Filter element	Seal Kit code number NBR	FPM	Indicator connection plug NBR	FPM
FMM 150	See order table	02050731	02050732	T2H	T2V

HPB series

Maximum working pressure up to 42 MPa (420 bar) - Flow rate up to 300 l/min



HPB GENERAL INFORMATION

Description

High Pressure Bowl Kit

Maximum working pressure up to 42 MPa (420 bar)
Flow rate up to 300 l/min

HPB is a range of high pressure bowl kits for protection of sensitive components in high pressure hydraulic systems in the mobile machines. They are directly integrated in the control blocks.

Available features:
- Fine filtration rating, to get a good cleanliness level into the system
- Low collapse filter element “N”, for use with blocks provided with bypass valve
- High collapse filter element with external support “S”, for use with blocks not provided with the bypass valve

Technical data

Filter housing materials
- Housing: Phosphatized steel

Pressure
- Test pressure: 63 MPa (630 bar)
- Burst pressure: 126 MPa (1260 bar)
- Pulse pressure fatigue test: 1 000 000 cycles with pressure from 0 to 42 MPa (420 bar)

Δp element type
- Microfibre / Wire mesh filter elements - series N: 20 bar
- Microfibre / Wire mesh filter elements - series S: 210 bar
- Fluid flow through the filter element from OUT to IN

Seals
- Standard NBR series A
- Optional FPM series V

Temperature
From -25 °C to +110 °C

Note
HPB filters are provided for vertical mounting



Weights [kg] and volumes [dm³]

Filter series	Weights [kg]						Volumes [dm³]					
	Length	1	2	3	4	5	Length	1	2	3	4	5
HPB 050		1.10	1.50	1.90	2.40	3.50		0.30	0.45	0.60	0.80	1.20
HPB 150		2.90	4.90	6.30	-	-		0.45	0.85	1.10	-	-

FILTER ASSEMBLY SIZING
Flow rates [l/min]

		Filter element design - N Series						Filter element design - S Series				
Filter series	Length	A03	A06	A10	A16	A25	M25	A03	A06	A10	A16	A25
HPB 050	1	42	43	79	82	106	147	29	39	57	59	74
	2	52	57	85	96	121	149	45	49	76	88	114
	3	66	69	97	106	130	150	58	61	89	99	125
	4	83	89	113	115	134	152	74	80	106	108	129
	5	107	110	130	134	141	154	93	95	111	121	139
HPB 150	1	81	88	156	163	179	295					
	2	142	145	227	230	236	312					
	3	170	180	242	245	263	315					

Maximum flow rate for a complete pressure filter with a pressure drop Δp = 1.5 bar.

The reference fluid has a kinematic viscosity of 30 mm^2/s (cSt) and a density of 0.86 kg/dm^3.

For different pressure drop or fluid viscosity we recommend to use our selection software available on www.mpfiltri.com.

You can also calculate the right size using the formulas present on the FILTER SIZING paragraph at the beginning of the full catalogue or at the beginning of the filter family brochure.

Please, contact our Sales Department for further additional information.

Filter series	Style S
HPB 050	•
HPB 150	•

Hydraulic symbols

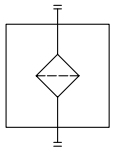

Designation & Ordering code

COMPLETE FILTER

Configuration example: HPB050 | 3 | A | A10 | N | P01

Series and size
HPB050

Length
1 | **2** | **3** | **4** | **5**

Seals

A	NBR
V	FPM

Filtration rating (filter media)

A03	Inorganic microfiber	3 µm
A06	Inorganic microfiber	6 µm
A10	Inorganic microfiber	10 µm
A16	Inorganic microfiber	16 µm
A25	Inorganic microfiber	25 µm
M25	Wire mesh	25 µm

Element Δp

N	20 bar
S	210 bar

Execution

P01	MP Filtri standard
Pxx	Customized

FILTER ELEMENT

Configuration example: HP150 | 3 | A10 | A | N | P01

Element series and size
HP050

Element length
1 | **2** | **3** | **4** | **5**

Seals

A	NBR
V	FPM

Filtration rating (filter media)

A03	Inorganic microfiber	3 µm
A06	Inorganic microfiber	6 µm
A10	Inorganic microfiber	10 µm
A16	Inorganic microfiber	16 µm
A25	Inorganic microfiber	25 µm
M25	Wire mesh	25 µm

Seals

A	NBR
V	FPM

Element Δp

N	20 bar
S	210 bar

Execution

P01	MP Filtri standard
Pxx	Customized

Dimensions

HPB050

Filter length	H [mm]
1	107
2	144
3	186
4	234
5	356

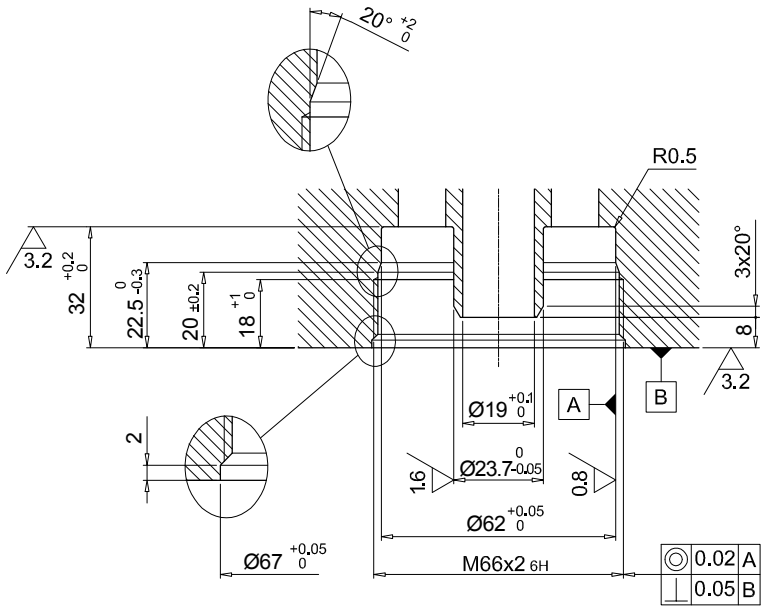

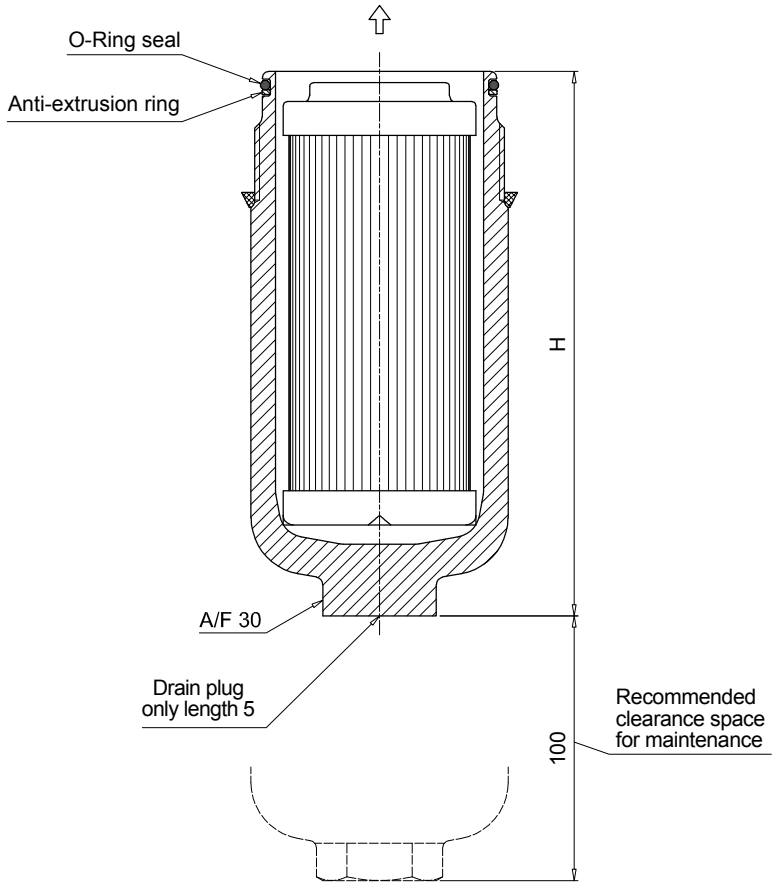

Designation & Ordering code

COMPLETE FILTER

Configuration example: HPB150 | 3 | A | A10 | N | P01

Series and size
HPB150

Length
1 | **2** | **3**

Seals

A	NBR
V	FPM

Filtration rating (filter media)

A03	Inorganic microfiber	3 µm
A06	Inorganic microfiber	6 µm
A10	Inorganic microfiber	10 µm
A16	Inorganic microfiber	16 µm
A25	Inorganic microfiber	25 µm
M25	Wire mesh	25 µm

Element Δp

N	20 bar

Execution

P01	MP Filtri standard
Pxx	Customized

FILTER ELEMENT

Configuration example: HP050 | 3 | A10 | A | N | P01

Element series and size
HP150

Element length
1 | **2** | **3**

Seals

A	NBR
V	FPM

Filtration rating (filter media)

A03	Inorganic microfiber	3 µm
A06	Inorganic microfiber	6 µm
A10	Inorganic microfiber	10 µm
A16	Inorganic microfiber	16 µm
A25	Inorganic microfiber	25 µm
M25	Wire mesh	25 µm

Seals

A	NVR
V	FPM

Element Δp

N	20 bar

Execution

P01	MP Filtri standard
Pxx	Customized

Dimensions

HPB150	
Filter length	**H [mm]**
1	161
2	271
3	346

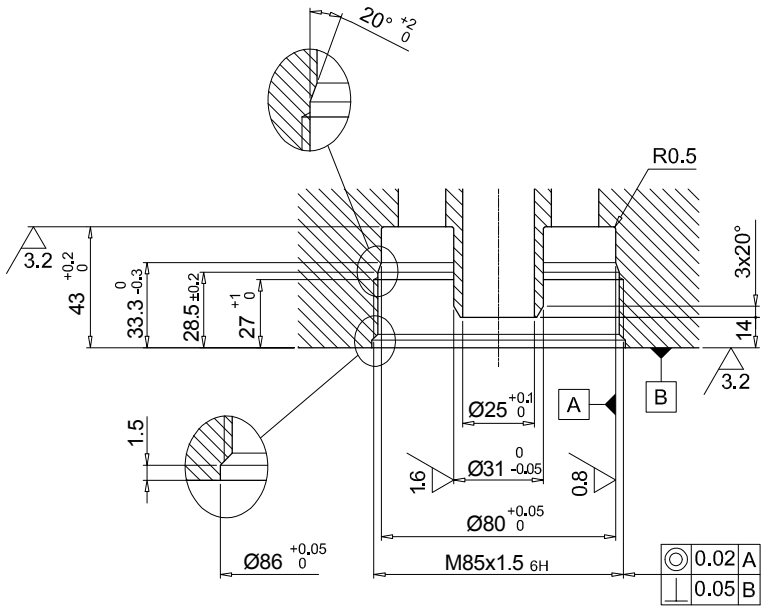

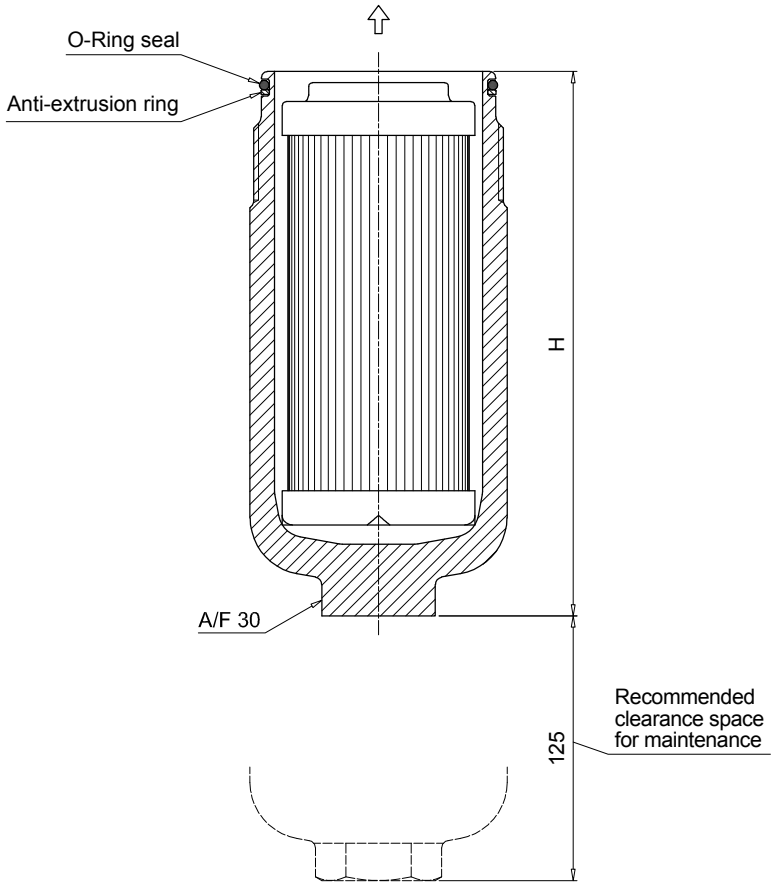

Order number for spare parts

HPB 050

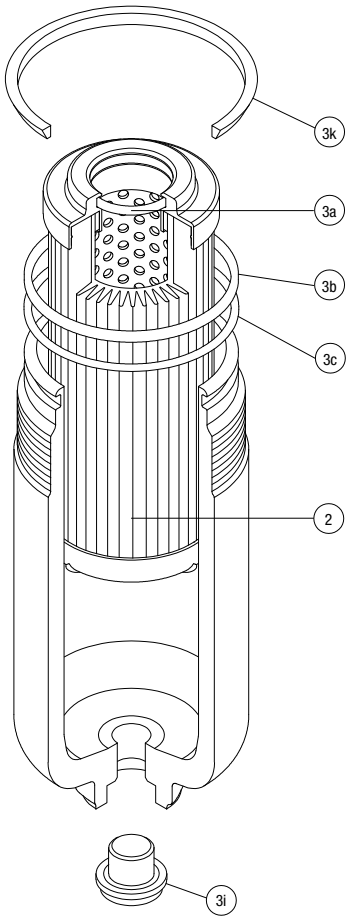

Item:	Q.ty: 1 pc. 2	Q.ty: 1 pc. 3 (3a ÷ 3i)	
Filter series	Filter element	Seal Kit code number NBR	FPM
HPB 050	See order table	02050813	02050823

HPB 150

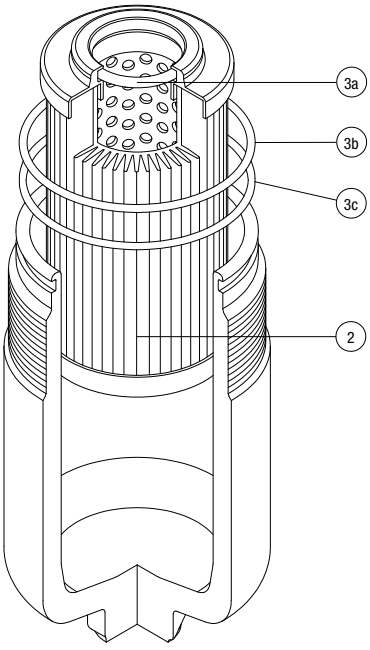

Item:	Q.ty: 1 pc. 2	Q.ty: 1 pc. 3 (3a ÷ 3c)	
Filter series	Filter element	Seal Kit code number NBR	FPM
HPB 150	See order table	02050816	02050826

FHA 051 series

Maximum working pressure up to 56 MPa (560 bar) - Flow rate up to 150 l/min



FHA 051 GENERAL INFORMATION

Description

High Pressure filters

In-line
Maximum working pressure up to 56 MPa (560 bar)
Flow rate up to 150 l/min

FHA is a range of high pressure filter for protection of sensitive components in high pressure hydraulic systems in the mobile machines. They are directly connected to the lines of the system through the hydraulic fittings.

Available features:
- Female threaded connections up to 3/4", for a maximum flow rate of 150 l/min
- Fine filtration rating, to get a good cleanliness level into the system
- Bypass valve, to relieve excessive pressure drop across the filter media
- Check valve, to protect the system against reverse flow
- Reverse flow valve, to allow bidirectional flow through the filter housing. The back flow is not filtered
- Low collapse filter element "N", for use with filters provided with bypass valve
- Low collapse filter element with external support "R", for filter element protection against the back pressure caused by the check valve or the reverse flow in filters provided with the bypass valve
- High collapse filter element with external support "S", for filter element protection against the back pressure caused by the check valve or the reverse flow in filters not provided with the bypass valve
- Visual, electrical and electronic differential clogging indicators

Common applications:
Delivery lines, in any heavy duty industrial equipment or mobile machines

Technical data

Filter housing materials
- Head: Steel (chemical heat treatment)
- Housing: Steel (chemical heat treatment)
- Bypass valve: Steel

Pressure
- Test pressure: 84 MPa (840 bar)
- Burst pressure: 168 MPa (1680 bar)
- Pulse pressure fatigue test: 1 00 000 cycles with pressure from 0 to 56 MPa (560 bar)

Bypass valve
- Opening pressure 600 kPa (6 bar) ±10%
- Other opening pressures on request.

Δp element type
- Microfibre filter elements - series N-R: 20 bar
- Microfibre filter elements - series S: 210 bar
- Wire mesh filter elements - series N: 20 bar
- Fluid flow through the filter element from OUT to IN

Seals
- Standard NBR series A
- Optional FPM series V

Temperature
From -25 °C to +110 °C

Connections
In-line Inlet/Outlet

Note
FHA filters are provided for vertical mounting



Weights [kg] and volumes [dm³]

Filter series	Weights [kg]						Volumes [dm³]					
	Length	1	2	3	4	5	Length	1	2	3	4	5
FHA 051		3.28	3.65	4.06	4.54	5.74		0.33	0.47	0.62	0.79	1.23

FILTER ASSEMBLY SIZING
Flow rates [l/min]

		Filter element design - N Series						Filter element design - R Series					Filter element design - S Series				
Filter series	Length	A03	A06	A10	A16	A25	M25	A03	A06	A10	A16	A25	A03	A06	A10	A16	A25
FHA 051	1	42	41	82	85	110	156	42	41	82	85	110	30	40	58	60	76
	2	53	58	87	100	127	158	53	58	87	100	127	45	50	78	91	120
	3	68	71	101	111	137	160	68	71	101	111	137	59	62	92	103	131
	4	86	92	118	121	142	162	86	92	118	121	142	77	83	110	113	137
	5	112	115	137	142	150	165	112	115	137	142	150	96	99	116	128	147

Maximum flow rate for a complete pressure filter with a pressure drop Δp = 1.5 bar.
The reference fluid has a kinematic viscosity of 30 mm^2/s (cSt) and a density of 0.86 kg/dm^3.
For different pressure drop or fluid viscosity we recommend to use our selection software available on www.mpfiltri.com.
You can also calculate the right size using the formulas present on the FILTER SIZING paragraph at the beginning of the full catalogue or at the beginning of the filter family brochure.
Please, contact our Sales Department for further additional information.

Hydraulic symbols

Filter series	Style S	Style B	Style T	Style D	Style V	Style Z
FHA 051	•	•	•	•	•	•

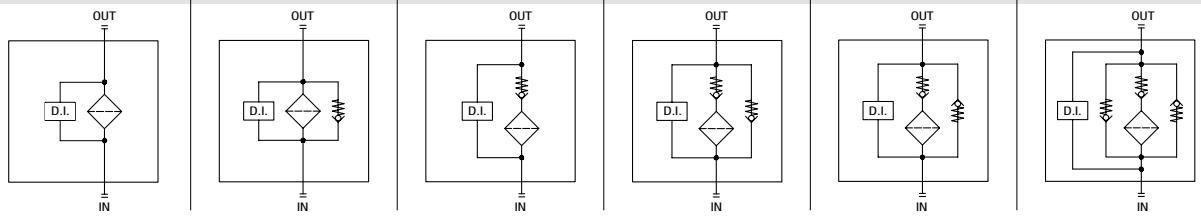

Pressure drop

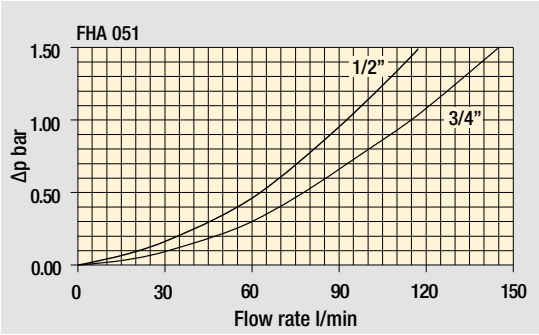

Filter housings
Δp pressure drop

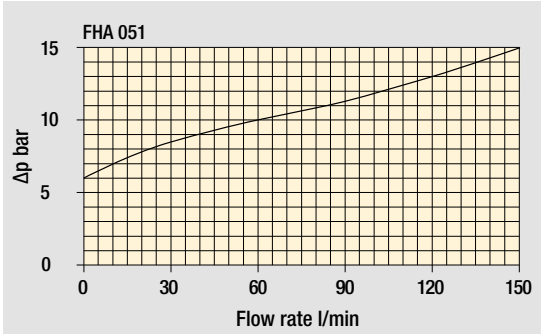

Bypass valve
pressure drop

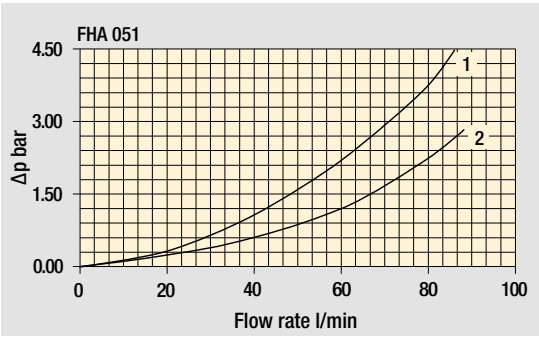

Pressure drop in reverse flow valves

1 - Reverse flow
2 - In filter direction

The curves are plotted using mineral oil with density of 0.86 kg/dm^3 in compliance with ISO 3968. Δp varies proportionally with density.

FHA 051

Designation & Ordering code

COMPLETE FILTER

Configuration example: FHA051 | 3 | B | A | G | A10 | N | P01

Series and size
FHA051

Length
1 | **2** | **3** | **4** | **5**

Valves

S	Without bypass
B	With bypass 6 bar
T	With check valve, without bypass
D	With check valve, with bypass 6 bar
V	With reverse flow, without bypass
Z	With reverse flow, with bypass 6 bar

Seals

A	NBR
V	FPM

Connections

A	M18x1.5 - ISO 6149	**E**	1/2" NPT
B	M22x1.5 - ISO 6149	**F**	3/4" NPT
C	G 1/2"	**G**	SAE 8 - 3/4" - 16 UNF
D	G 3/4"	**H**	SAE 12 - 1 1/16" - 12 UN

Filtration rating (filter media)

A03	Inorganic microfiber	3 µm
A06	Inorganic microfiber	6 µm
A10	Inorganic microfiber	10 µm
A16	Inorganic microfiber	16 µm
A25	Inorganic microfiber	25 µm
M25	Wire mesh	25 µm

Valves

Element Δp	S	B	T	D	V	Z
N 20 bar		•				
R 20 bar				•		•
S 210 bar	•		•		•	

Execution

P01	Upper connection for clogging indicator
P02	Without connection for clogging indicator
P03	Frontal connection for clogging indicator
Pxx	Customized

FILTER ELEMENT

Configuration example: HP050 | 3 | A10 | A | N | P01

Element series and size
HP050

Element length
1 | **2** | **3** | **4** | **5**

Filtration rating (filter media)

A03	Inorganic microfiber	3 µm
A06	Inorganic microfiber	6 µm
A10	Inorganic microfiber	10 µm
A16	Inorganic microfiber	16 µm
A25	Inorganic microfiber	25 µm
M25	Wire mesh	25 µm

Seals

A	NBR
V	FPM

Element Δp

N	20 bar
R	20 bar
S	210 bar

Execution

P01	MP Filtri standard
Pxx	Customized

ACCESSORIES

Differential indicators

		page
DEA	Electrical differential indicator	577
DEH	Hazardous area electronic differential indicator	577-578
DEM	Electrical differential indicator	578-579
DLA	Electrical / visual differential indicator	579-580
DLE	Electrical / visual differential indicator	580
DTA	Electronic differential indicator	581
DVA	Visual differential indicator	581
DVM	Visual differential indicator	581

Additional features

		page
T2	Plug	582

FHA051	
Filter length	**H [mm]**
1	158
2	195
3	237
4	285
5	407

Connections	**R**
A-B-C-D	M10
E-F-G-H	3/8" UNC

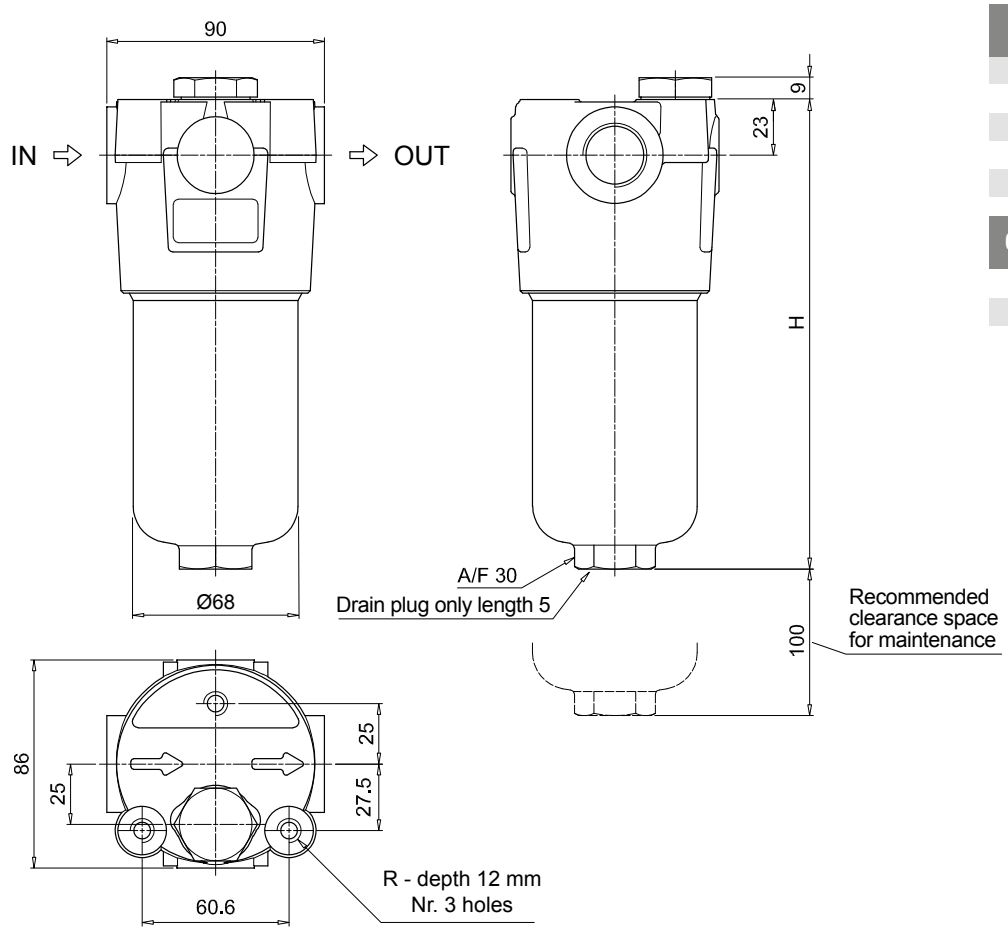

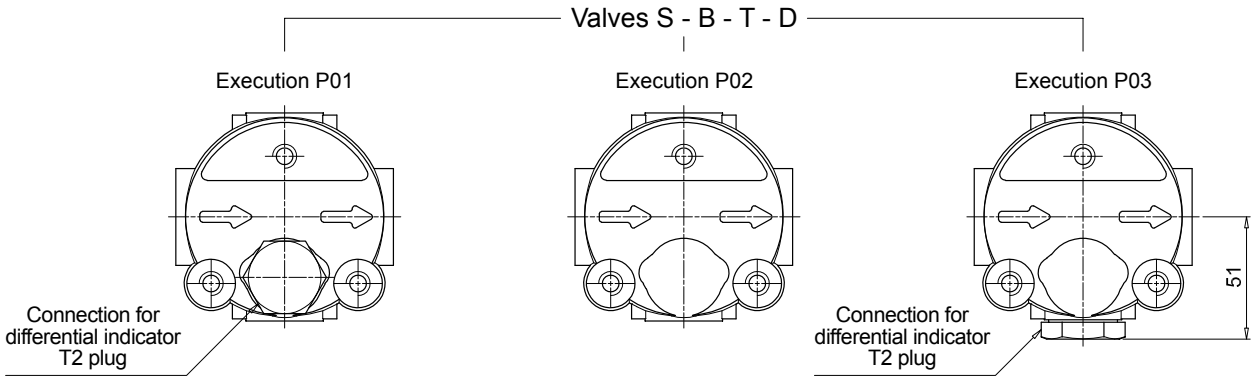

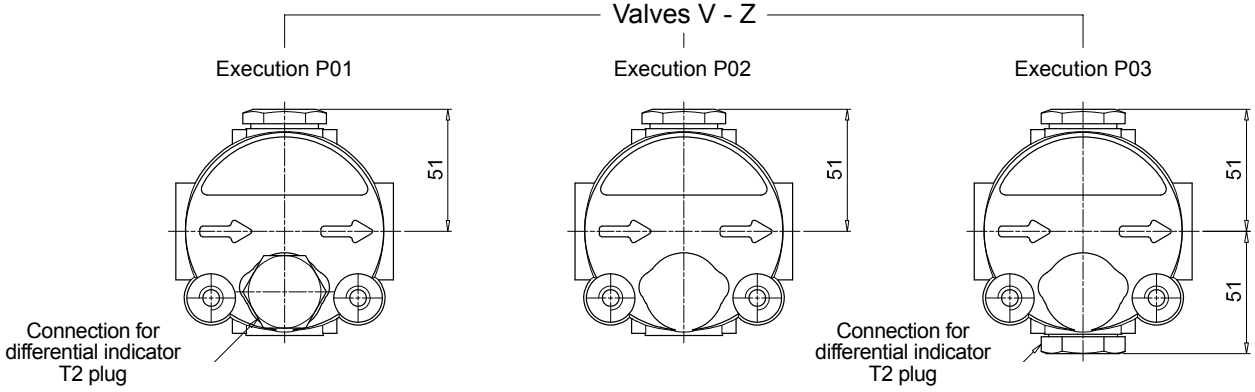

FHA 051 SPARE PARTS

Order number for spare parts

FHA 051

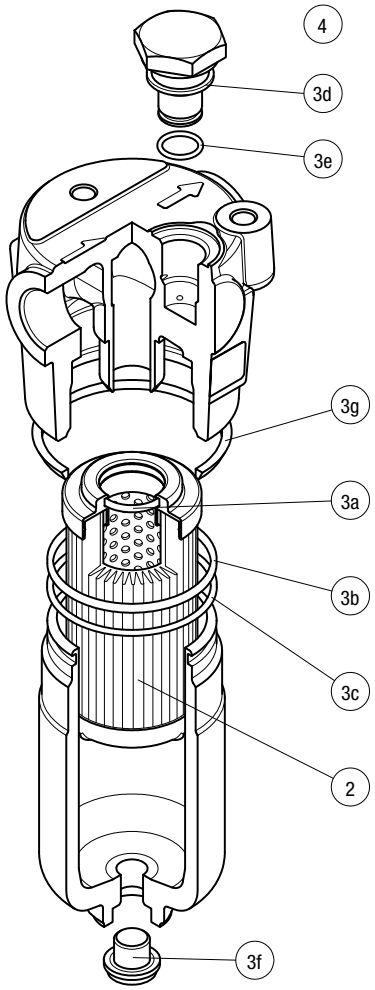

Item:	Q.ty: 1 pc. 2	Q.ty: 1 pc. 3 (3a ÷ 3g)		Q.ty: 1 pc. 4	
Filter series	**Filter element**	**Seal Kit code number NBR**	**FPM**	**Indicator connection plug NBR**	**FPM**
FHA 051	See order table	02050288	02050305	T2H	T2V

FHM series

Maximum working pressure up to 32 MPa (320 bar) - Flow rate up to 400 l/min



FHM GENERAL INFORMATION

Description

High Pressure filters

Manifold
Maximum working pressure up to 32 MPa (320 bar)
Flow rate up to 400 l/min

FHM is a range of high pressure filter for protection of sensitive components in high pressure hydraulic systems in the mobile machines.
They are directly connected to the top of the manifold, through the proper flanged interface.

Available features:
Available features:
- Manifold connections up to Ø30 mm, for a maximum flow rate of 400 l/min
- ISO 4401 CETOP 3 and CETOP 5 interface, for direct mounting on the CETOP valves
- Fine filtration rating, to get a good cleanliness level into the system
- Bypass valve, to relieve excessive pressure drop across the filter media
- Check valve, to protect the system against reverse flow
- Low collapse filter element "N", for use with filters provided with bypass valve
- High collapse filter element "H", for use with filters not provided with bypass valve
- High collapse filter element with external support "S", for filter element protection against the back pressure caused by the check valve in filters not provided with the bypass valve
- Visual, electrical and electronic differential clogging indicators

Common applications:
Delivery lines, in any high pressure industrial equipment

Technical data

Filter housing materials
- Head
  Phosphatized cast iron: FHM 006-007-010
  Phosphatized steel: FHM 050-065-135-320-500

- Housing: Phosphatized steel

- Bypass valve: Steel

- Check valve: Steel

Pressure
- Test pressure: 48 MPa (480 bar)
- Burst pressure: 96 MPa (960 bar)
- Pulse pressure fatigue test: 1 000 000 cycles with pressure from 0 to 32 MPa (320 bar)

Bypass valve
- Opening pressure 600 kPa (6 bar) ±10%
- Other opening pressures on request.

Δp element type
- Microfibre filter elements - series N: 20 bar (not available for FHM 006, FHM 007 and FHM 010)
- Microfibre filter elements - series H: 210 bar (not available for FHM 050 and FHM 500)
- Microfibre filter elements - series S: 210 bar (only for FHM 050 and FHM 500)
- Wire mesh filter elements - series N: 20 bar (not available for FHM 006)
- Wire mesh filter elements - series H: 210 bar (not available for FHM 050 and FHM 500)
- Fluid flow through the filter element from OUT to IN

Seals
- Standard NBR series A
- Optional FPM series V

Temperature
From -25 °C to +110 °C

Connections
Manifold mounting

Note
FHM filters are provided for vertical mounting



Weights [kg] and volumes [dm³]

Filter series	Weights [kg]					Volumes [dm³]				
	Length 1	2	3	4	5	Length 1	2	3	4	5
FHM 006	2.17	-	-	-	-	0.12	-	-	-	-
FHM 007	-	4.74	5.95	-	-	-	0.30	0.50	-	-
FHM 010	-	4.74	5.95	-	-	-	0.30	0.50	-	-
FHM 050	5.31	5.68	6.09	6.56	7.74	0.29	0.38	0.48	0.60	0.89
FHM 065	5.47	5.83	7.04	-	-	0.27	0.34	0.56	-	-
FHM 135	8.78	10.38	11.43	-	-	0.49	0.82	1.03	-	-
FHM 320	19.80	21.93	24.22	26.70	-	1.04	1.76	2.53	3.36	-
FHM 500	35.00	39.17	42.69	54.70	60.50	1.63	2.35	2.96	5.11	6.44

FILTER ASSEMBLY SIZING
Flow rates [l/min]

		Filter element design - H Series					
Filter series	Length	A03	A06	A10	A16	A25	M25
FHM 006	**1**	9	10	13	14	15	16
FHM 007	**2**	13	13	15	16	16	16
	3	15	15	16	16	17	17
FHM 010	**2**	23	25	32	34	37	38
	3	31	33	37	38	39	40

		Filter element design - N Series						Filter element design - S Series				
Filter series	Length	A03	A06	A10	A16	A25	M25	A03	A06	A10	A16	A25
FHM 050	**1**	38	37	65	67	81	101	28	36	50	52	62
	2	46	50	69	75	89	102	41	44	63	71	85
	3	57	59	76	81	93	103	51	53	71	77	90
	4	68	71	84	86	95	103	62	66	81	82	93
	5	82	83	93	95	98	105	73	75	83	89	97

		Filter element design - N Series						Filter element design - H Series				
Filter series	Length	A03	A06	A10	A16	A25	M25	A03	A06	A10	A16	A25
FHM 065	**1**	23	30	48	53	71	102	22	23	43	50	67
	2	30	45	59	64	81	103	30	34	56	62	76
	3	52	60	78	82	92	105	51	58	77	81	91
FHM 135	**1**	61	65	99	104	131	149	46	51	83	86	122
	2	91	96	118	119	155	167	79	92	109	111	134
	3	118	119	144	146	156	168	103	112	130	137	146
FHM 320	**1**	112	121	187	217	252	312	97	102	156	162	228
	2	200	214	281	293	320	328	161	181	237	241	282
	3	245	267	312	320	325	333	207	233	275	280	306
	4	267	281	315	325	336	341	232	247	279	283	309

		Filter element design - N Series						Filter element design - S Series				
Filter series	Length	A03	A06	A10	A16	A25	M25	A03	A06	A10	A16	A25
FHM 500	**1**	211	232	281	289	309	394	126	135	208	210	261
	2	242	262	303	308	330	397	187	206	258	266	285
	3	284	294	336	338	357	399	226	230	285	290	315
	4	302	325	346	350	361	401	251	273	314	315	341
	5	325	334	356	361	373	401	296	301	335	338	360

Maximum flow rate for a complete pressure filter with a pressure drop Δp = 1.5 bar.
The reference fluid has a kinematic viscosity of 30 mm^2/s (cSt) and a density of 0.86 kg/dm^3.
For different pressure drop or fluid viscosity we recommend to use our selection software available on www.mpfiltri.com.
You can also calculate the right size using the formulas present on the FILTER SIZING paragraph at the beginning of the full catalogue or at the beginning of the filter family brochure.
Please, contact our Sales Department for further additional information.

Hydraulic symbols

Filter series	Stile S	Stile S	Stile S	Stile B	Stile T	Stile D
FHM 006	•					
FHM 007	•					
FHM 010		•				
FHM 050			•	•	•	•
FHM 065			•	•	•	•
FHM 135			•	•	•	•
FHM 320			•	•	•	•
FHM 500			•	•	•	•
	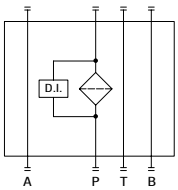	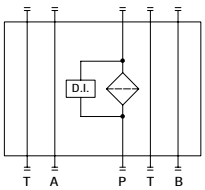	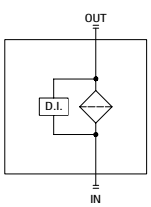	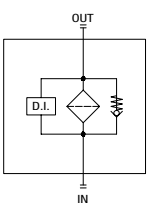	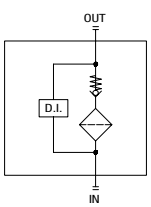	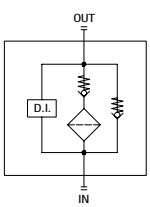

Pressure drop

Filter housings Δp pressure drop

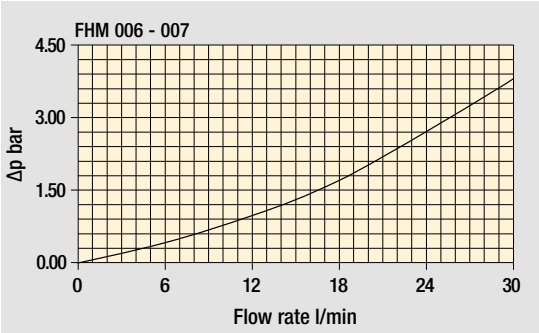

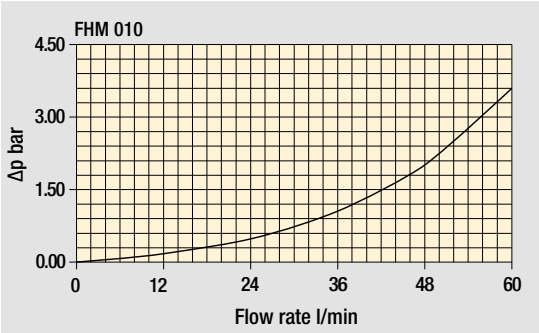

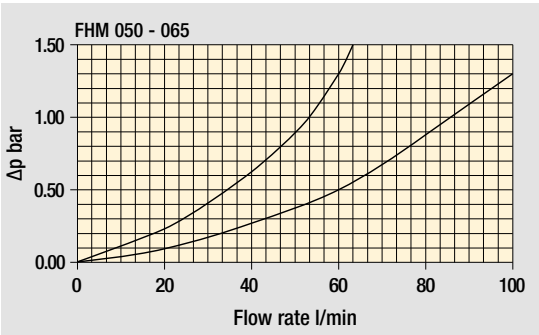

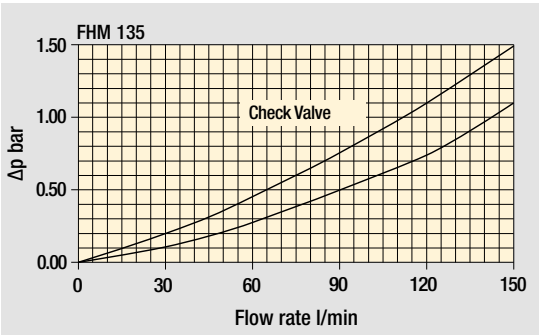

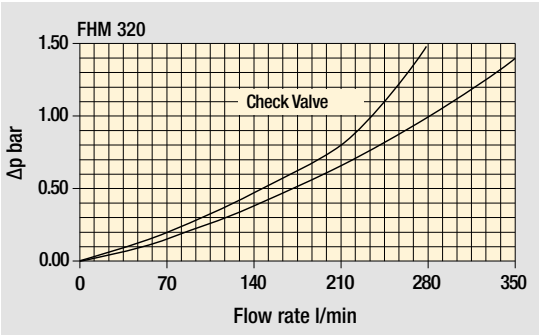

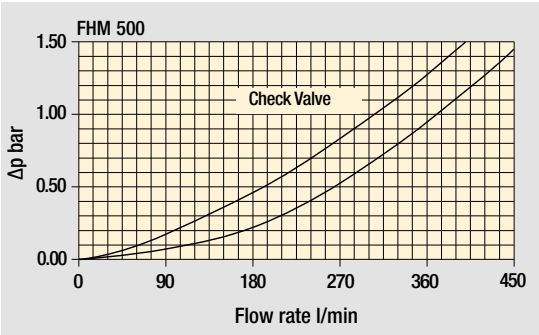

Bypass valve pressure drop

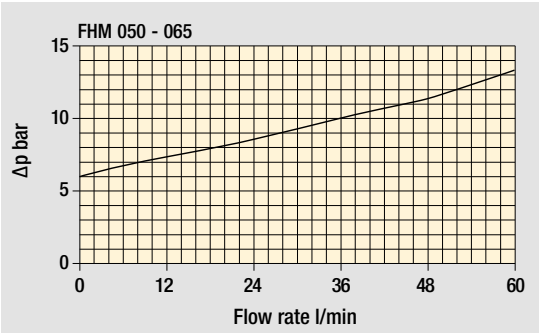

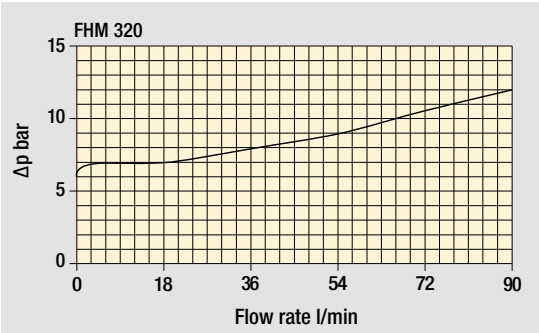

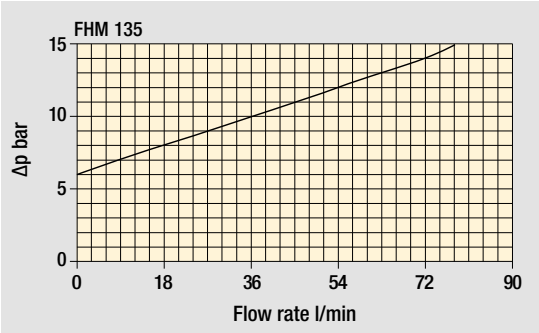

The curves are plotted using mineral oil with density of 0.86 kg/dm^3 in compliance with ISO 3968. Δp varies proportionally with density.

Designation & Ordering code

COMPLETE FILTER

Configuration example: FHM010 | 2 | S | V | G1 | A03 | H | P01

Series and size

FHM006 | **FHM007** | **FHM010**

Length	FHM006	FHM007	FHM010
1	•		
2		•	•
3		•	•

Valves

S	Without bypass

Seals

A	NBR
V	FPM

Connections

G1	Manifold side “A”
G2	Manifold side “B”

Filtration rating (filter media)

A03	Inorganic microfiber	3 µm	**A16**	Inorganic microfiber	16 µm
A06	Inorganic microfiber	6 µm	**A25**	Inorganic microfiber	25 µm
A10	Inorganic microfiber	10 µm	**M25**	Wire mesh	25 µm

Element Δp

H	210 bar

Execution

P01	MP Filtri standard
Pxx	Customized

FILTER ELEMENT

Configuration example: HP065 | 2 | A03 | A | H | P01

Element series and size

	FHM006	FHM007	FHM010
HP011	•		
HP065		•	•

Element length	FHM006	FHM007	FHM010
2		•	•
3	•	•	•

Filtration rating (filter media)

A03	Inorganic microfiber	3 µm	**A16**	Inorganic microfiber	16 µm
A06	Inorganic microfiber	6 µm	**A25**	Inorganic microfiber	25 µm
A10	Inorganic microfiber	10 µm	**M25**	Wire mesh	25 µm

Seals

A	NBR
V	FPM

Element Δp

H	210 bar

Execution

P01	MP Filtri standard
Pxx	Customized

ACCESSORIES

Differential indicators

		page
DEA	Electrical differential indicator	577
DEH	Hazardous area electronic differential indicator	577-578
DEM	Electrical differential indicator	578-579
DLA	Electrical / visual differential indicator	579-580
DLE	Electrical / visual differential indicator	580
DTA	Electronic differential indicator	581
DVA	Visual differential indicator	581
DVM	Visual differential indicator	581

Additional features

		page
T2	Plug	582

FHM006
Connection G1

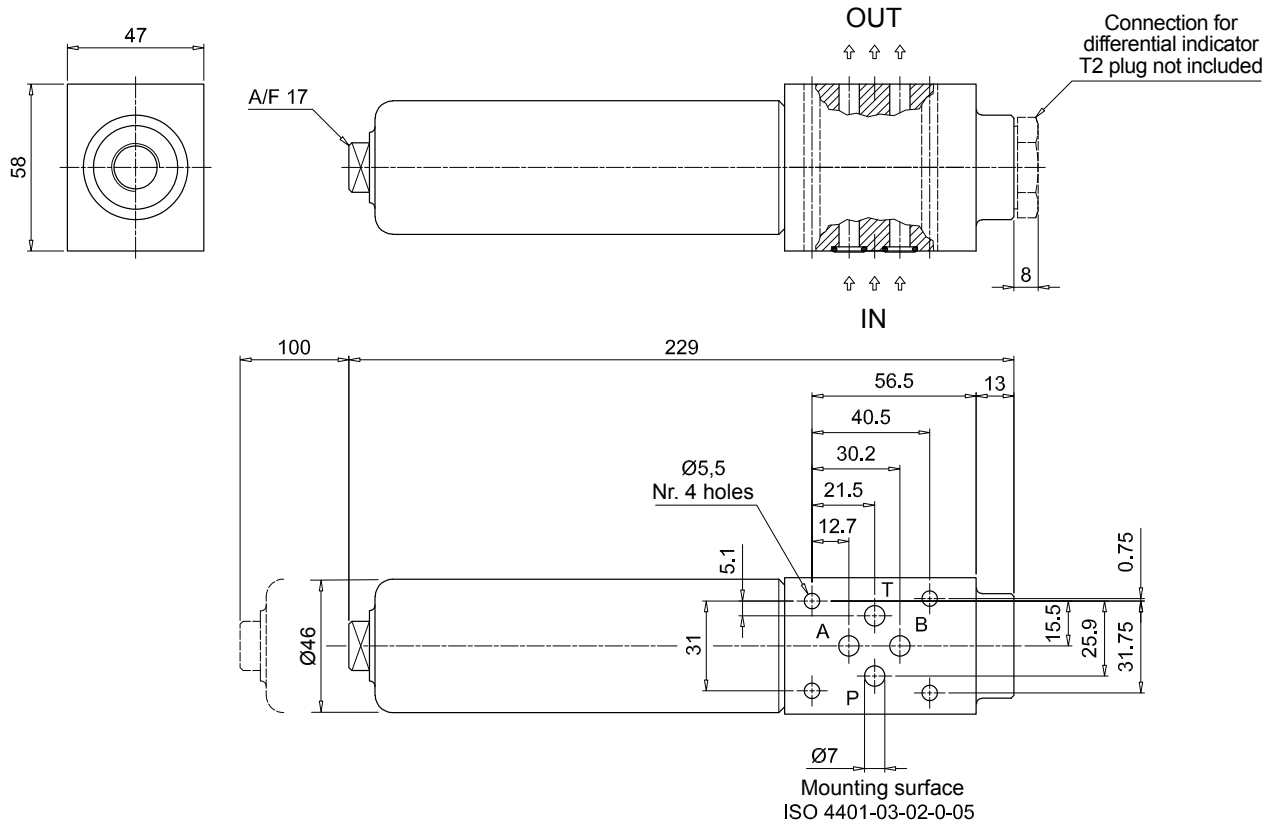

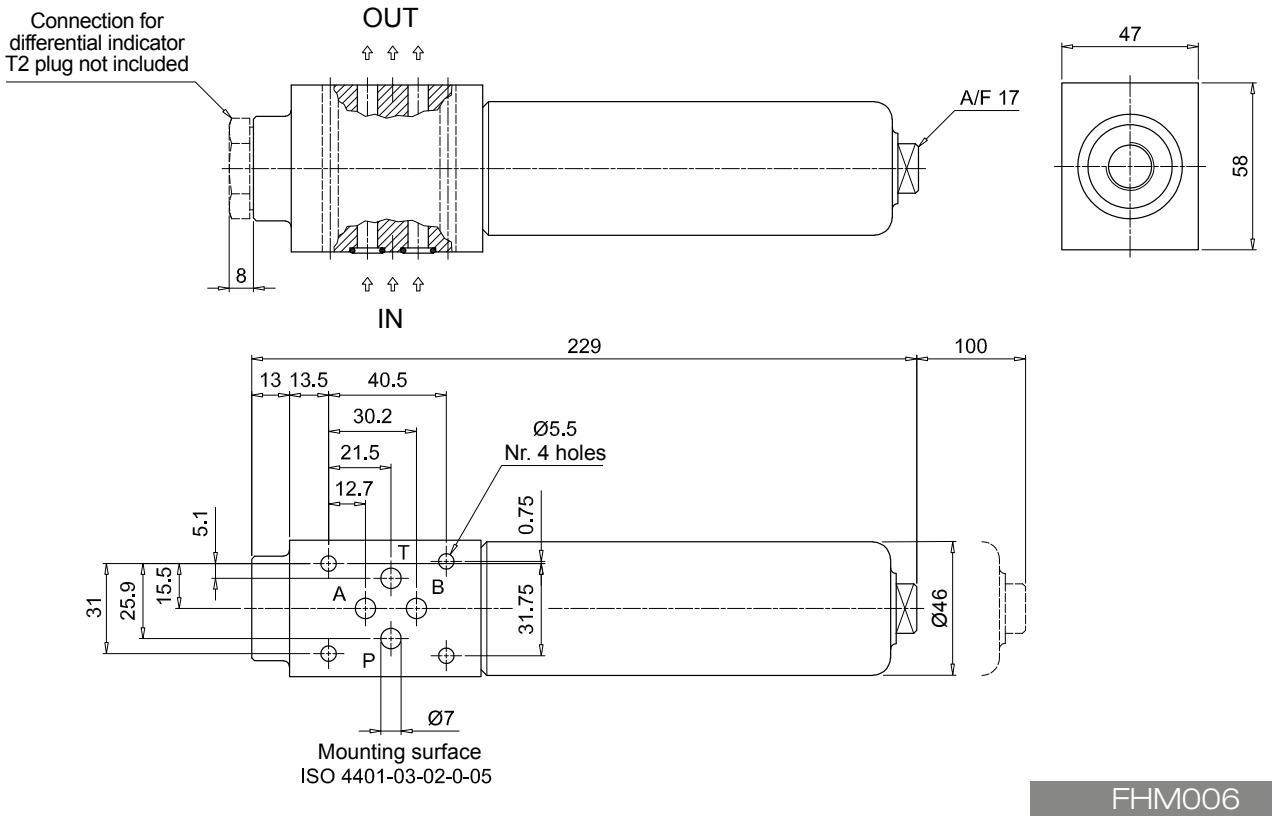

FHM006
Connection G2

Dimensions

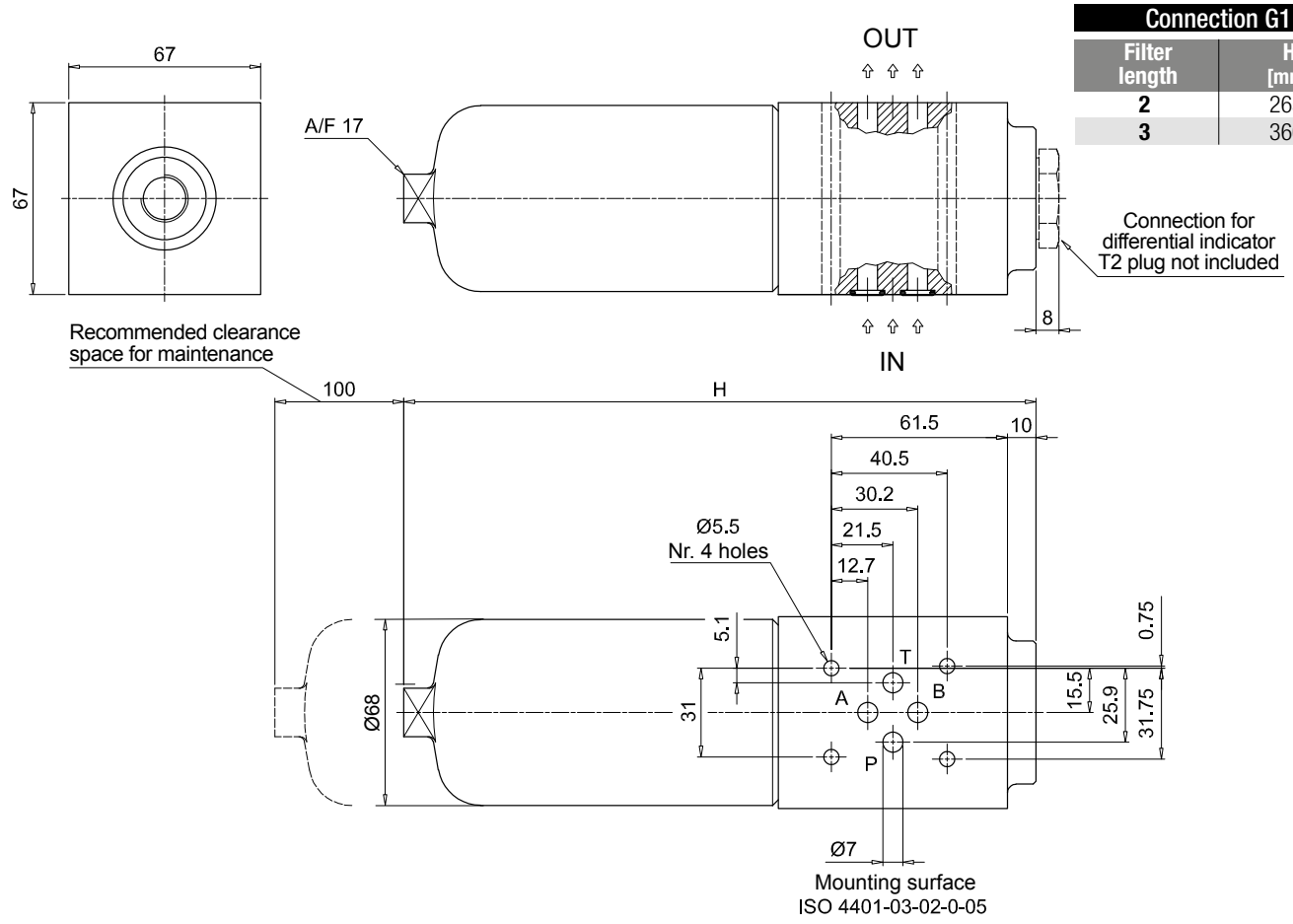

FHM007	
Connection G1	
Filter length	**H [mm]**
2	265
3	366

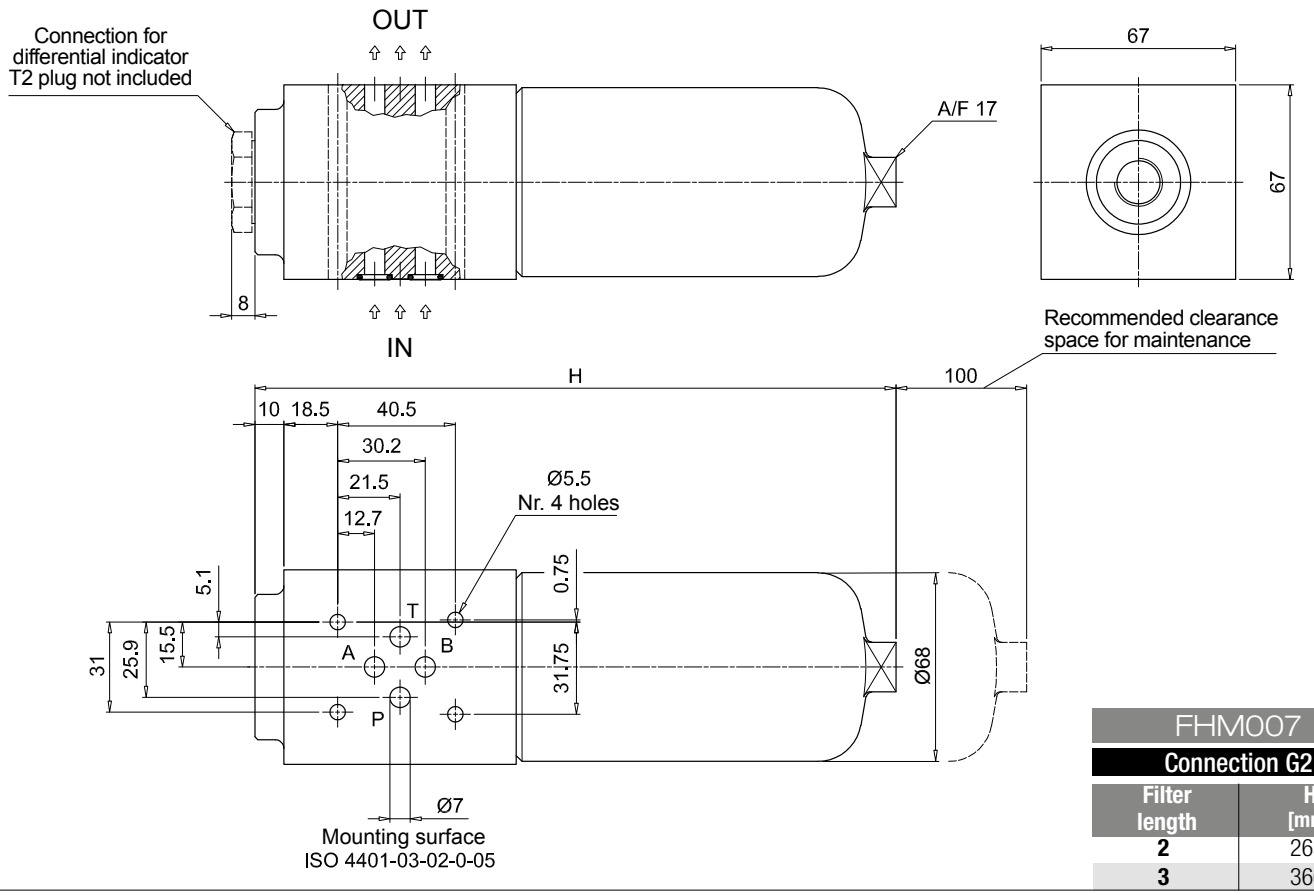

FHM007	
Connection G2	
Filter length	**H [mm]**
2	265
3	366

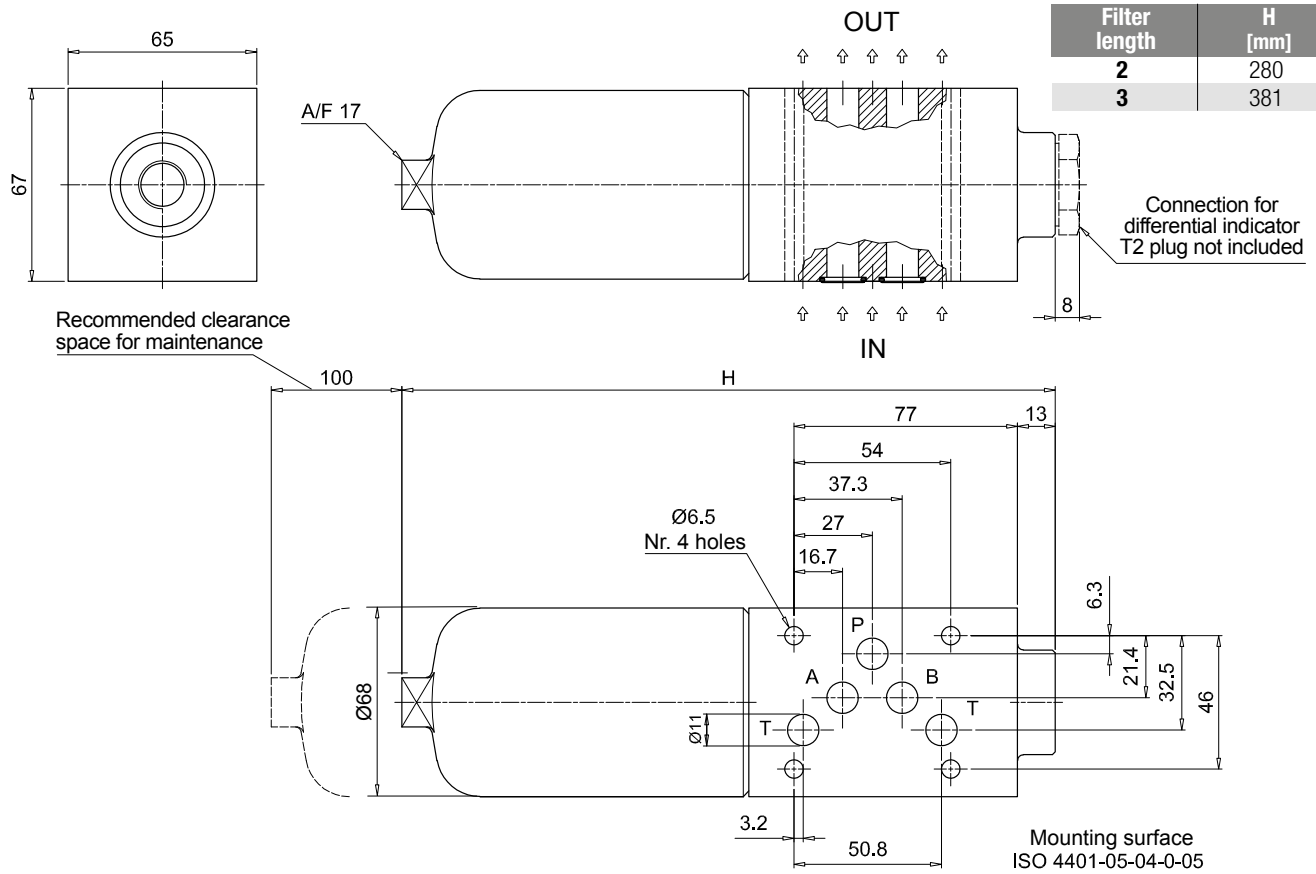

FHM010

Connection G1

Filter length	H [mm]
2	280
3	381

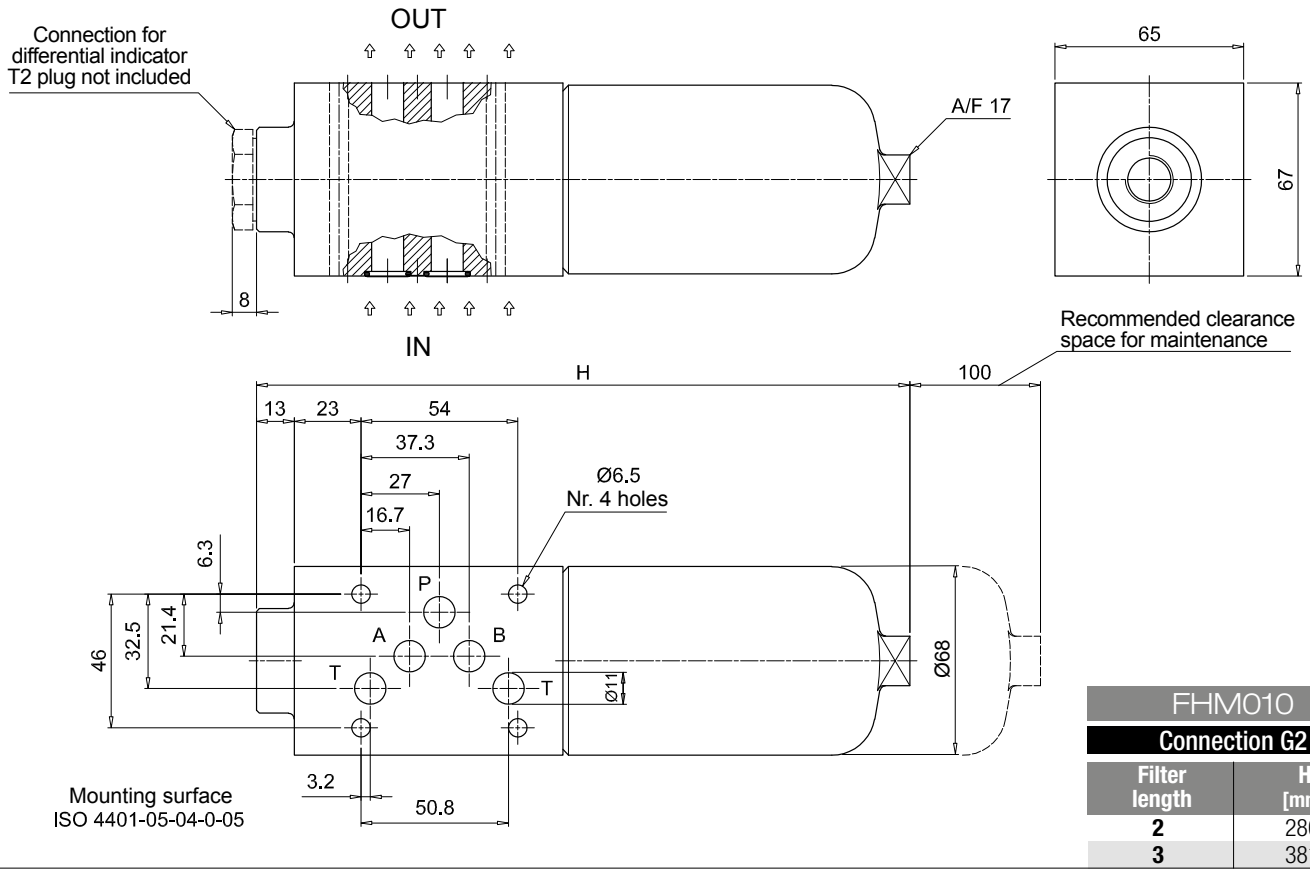

FHM010

Connection G2

Filter length	H [mm]
2	280
3	381

Designation & Ordering code

COMPLETE FILTER

Configuration example: FHM135 | 3 | S | A | F1 | A10 | H | P01

Series and size

FHM050 | **FHM065** | **FHM135**

Length	FHM050	FHM065	FHM135
1	•	•	•
2	•	•	•
3	•	•	•
4	•		
5	•		

Valves

S	Without bypass
B	With bypass 6 bar
T	With check valve, without bypass
D	With check valve, with bypass 6 bar

Seals

A	NBR
V	FPM

Connections

F1	Manifold

Filtration rating (filter media)

A03	Inorganic microfiber	3 µm	**A16**	Inorganic microfiber	16 µm
A06	Inorganic microfiber	6 µm	**A25**	Inorganic microfiber	25 µm
A10	Inorganic microfiber	10 µm	**M25**	Wire mesh	25 µm

Valves:	FHM050				FHM065-135			
Element Δp	**S**	**B**	**T**	**D**	**S**	**B**	**T**	**D**
N 20 bar		•		•		•		•
H 210 bar					•		•	
S 210 bar	•		•					

Execution	
P01	MP Filtri standard
Pxx	Customized

FILTER ELEMENT

Configuration example: HP135 | 3 | A10 | A | H | P01

Element series and size

HP050 | **HP065** | **HP135**

Element length	HP050	HP065	HP135
1	•	•	•
2	•	•	•
3	•	•	•
4	•		
5	•		

Filtration rating (filter media)

A03	Inorganic microfiber	3 µm	**A16**	Inorganic microfiber	16 µm
A06	Inorganic microfiber	6 µm	**A25**	Inorganic microfiber	25 µm
A10	Inorganic microfiber	10 µm	**M25**	Wire mesh	25 µm

Seals	
A	NBR
V	FPM

Element Δp	HP050	HP065	HP135
N 20 bar	•	•	•
H 210 bar		•	•
S 210 bar	•		

Execution	
P01	MP Filtri standard
Pxx	Customized

ACCESSORIES

Differential indicators

		page
DEA	Electrical differential indicator	577
DEH	Hazardous area electronic differential indicator	577-578
DEM	Electrical differential indicator	578-579
DLA	Electrical / visual differential indicator	579-580
DLE	Electrical / visual differential indicator	580
DTA	Electronic differential indicator	581
DVA	Visual differential indicator	581
DVM	Visual differential indicator	581

Additional features

		page
T2	Plug	582

Dimensions

FHM050	
Filter length	**H [mm]**
1	154
2	191
3	233
4	281
5	403

FHM065	
Filter length	**H [mm]**
1	162
2	193
3	295

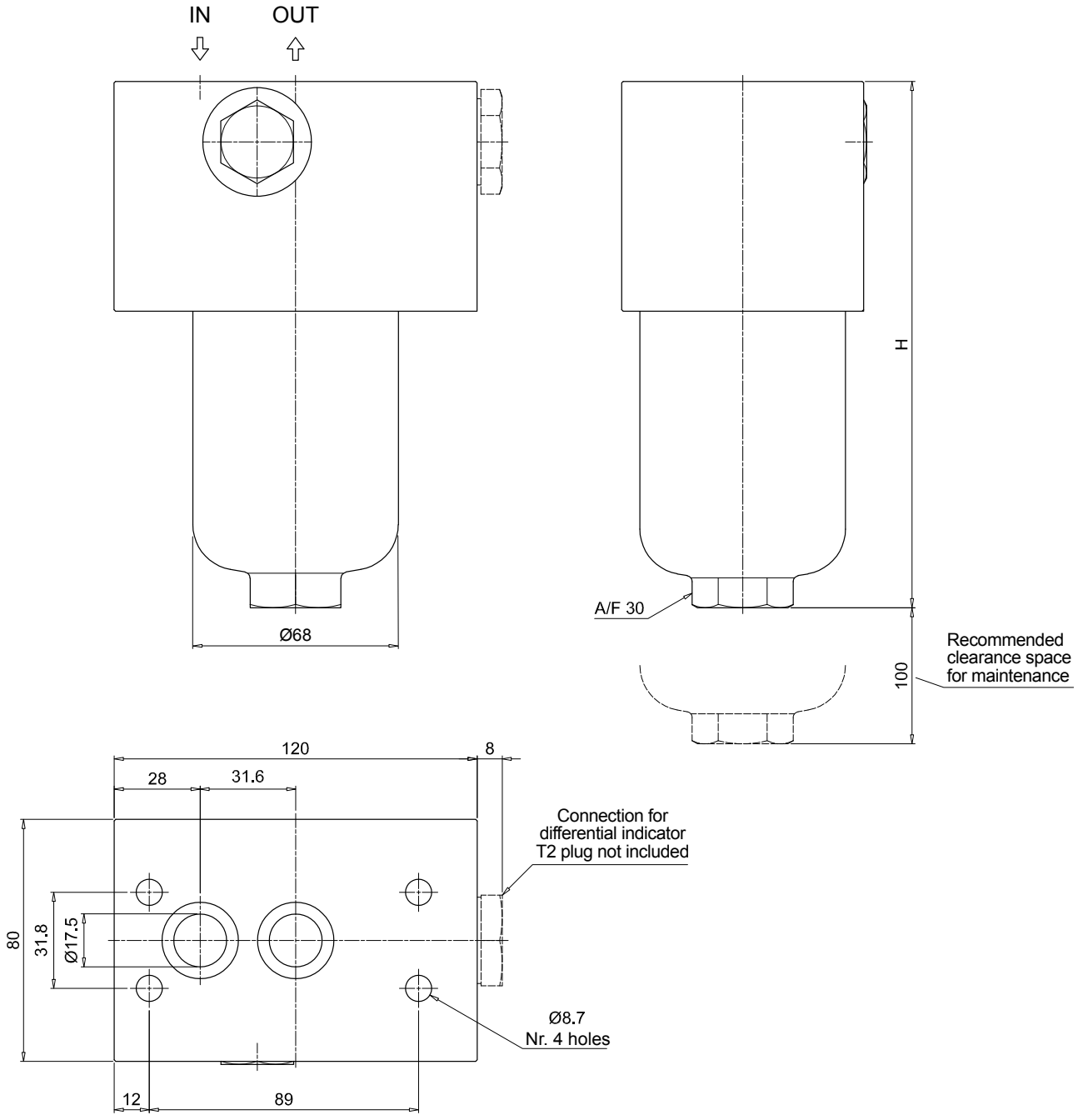

Dimensions

FHM135	
Filter length	**H [mm]**
1	202
2	315
3	390

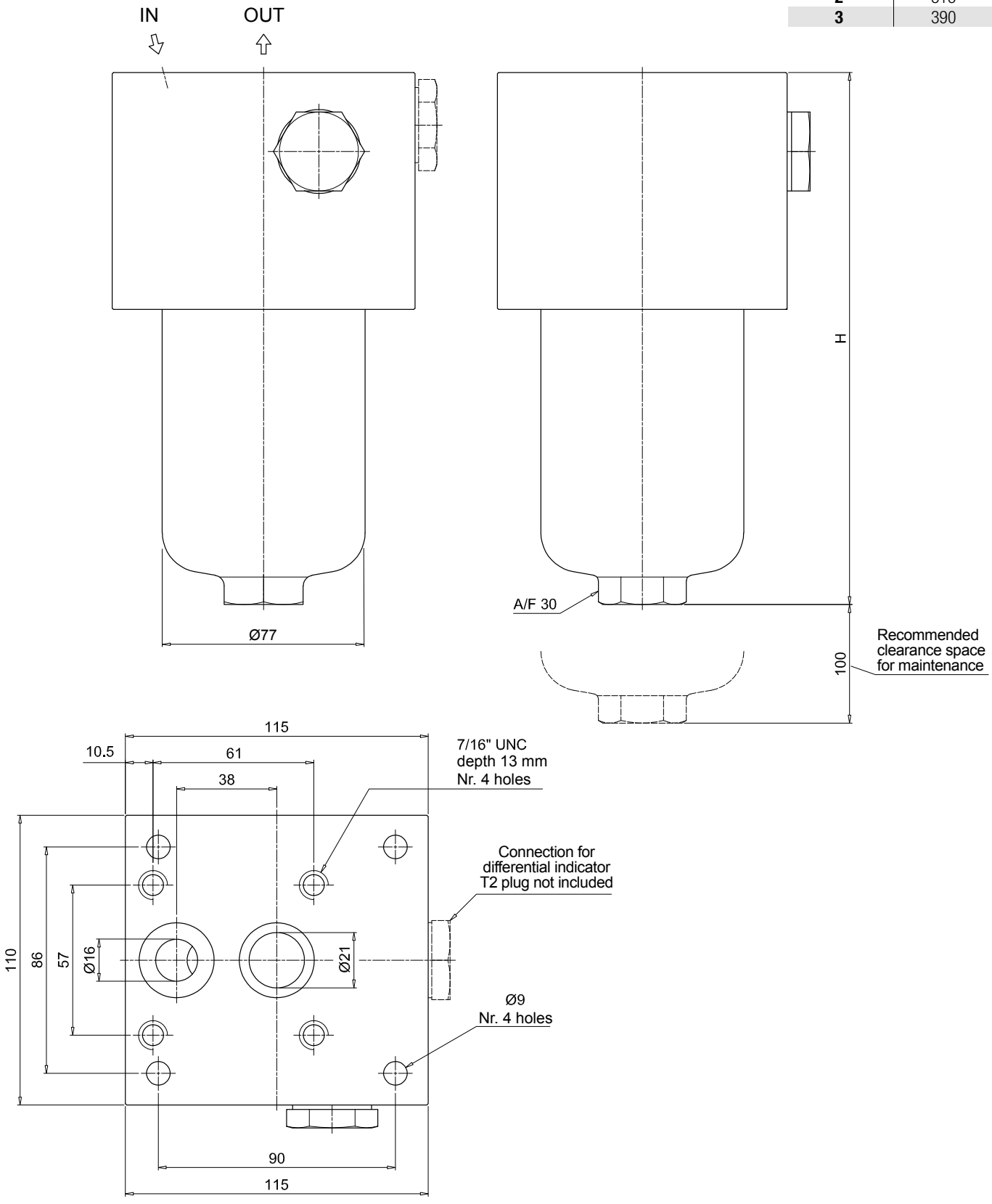

FHM FHM320 - FHM500

Designation & Ordering code

COMPLETE FILTER

Configuration example: FHM320 | 4 | D | A | F1 | A06 | N | P01

Series and size

FHM320 | **FHM500**

Length	FHM320	FHM500
1	•	•
2	•	•
3	•	•
4	•	•
5		•

Valves

S	Without bypass
B	With bypass 6 bar
T	With check valve, without bypass
D	With check valve, with bypass 6 bar

Seals

A	NBR
V	FPM

Connections

F1	Manifold

Filtration rating (filter media)

A03	Inorganic microfiber	3 µm	**A16**	Inorganic microfiber	16 µm
A06	Inorganic microfiber	6 µm	**A25**	Inorganic microfiber	25 µm
A10	Inorganic microfiber	10 µm	**M25**	Wire mesh	25 µm

Valves:	FHM320				FHM500			
Element Δp	S	B	T	D	S	B	T	D
N 20 bar		•		•		•		•
H 210 bar	•		•					
S 210 bar					•		•	

Execution	Filter length 1	2	3	4	5
P01 MP Filtri standard	•	•	•	•	•
P02 Maintenance from the bottom of the housing				•	•
Pxx Customized					

FILTER ELEMENT

Configuration example: HP320 | 4 | A06 | A | N | P01

Element series and size

HP320 | **HP500**

Element length	HP320	HP500
1	•	•
2	•	•
3	•	•
4	•	•
5		•

Filtration rating (filter media)

A03	Inorganic microfiber	3 µm	**A16**	Inorganic microfiber	16 µm
A06	Inorganic microfiber	6 µm	**A25**	Inorganic microfiber	25 µm
A10	Inorganic microfiber	10 µm	**M25**	Wire mesh	25 µm

Seals	
A	NBR
V	FPM

Element Δp	HP320	HP500
N 20 bar	•	•
H 210 bar	•	
S 210 bar		•

Execution	
P01	MP Filtri standard
Pxx	Customized

ACCESSORIES

Differential indicators		page
DEA	Electrical differential indicator	577
DEH	Hazardous area electronic differential indicator	577-578
DEM	Electrical differential indicator	578-579
DLA	Electrical / visual differential indicator	579-580
DLE	Electrical / visual differential indicator	580
DTA	Electronic differential indicator	581
DVA	Visual differential indicator	581
DVM	Visual differential indicator	581

Additional features		page
T2	Plug	582

Dimensions

FHM320

Filter length	H [mm]	H2 [mm] Execution P01	P02
1	293	150	-
2	416	150	-
3	548	150	-
4	702	150	550

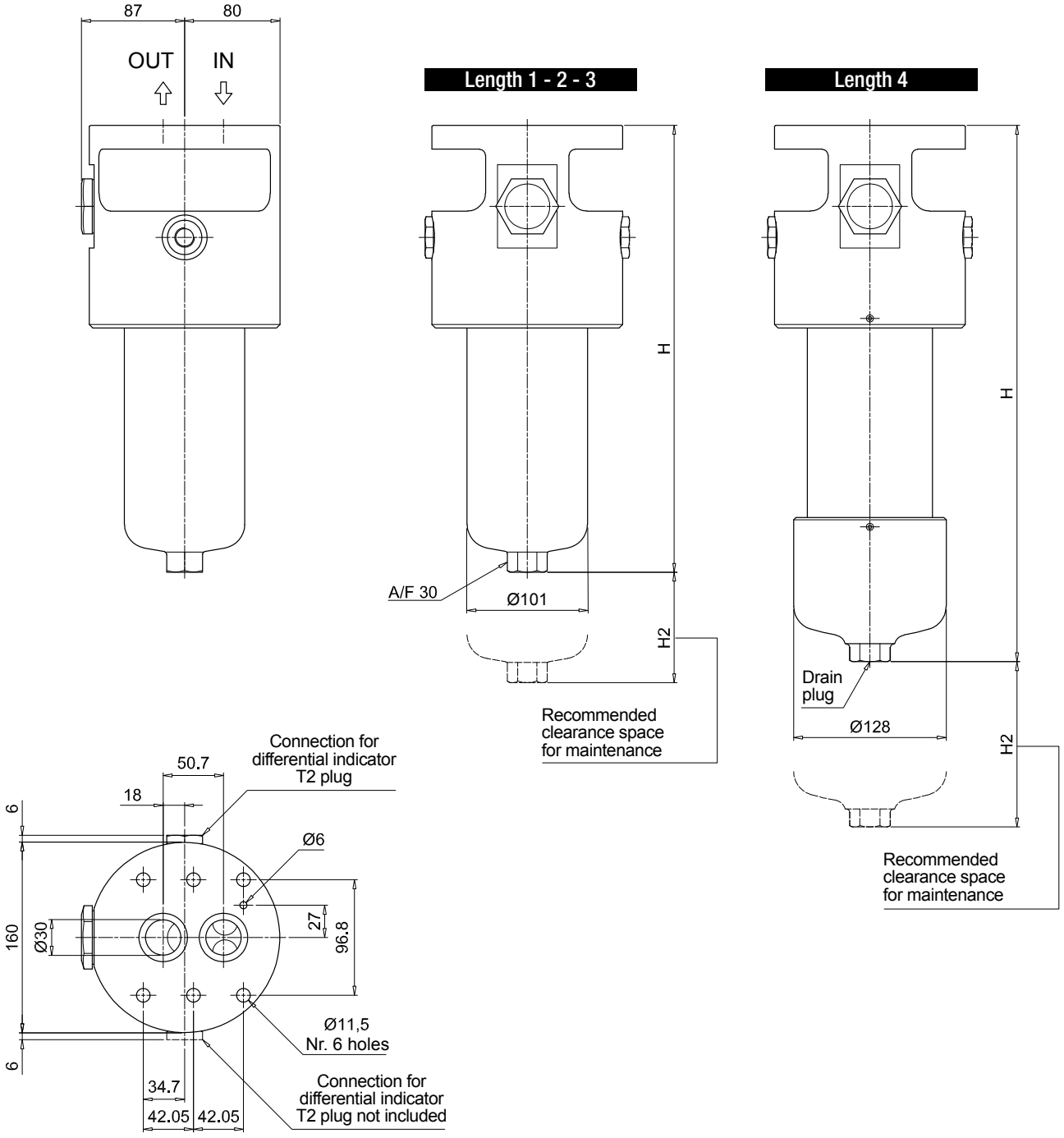

Dimensions

FHM500

Filter length	H [mm]	H2 [mm] Execution P01	H2 [mm] Execution P02
1	355	150	-
2	445	150	-
3	521	150	-
4	679	150	480
5	845	150	650

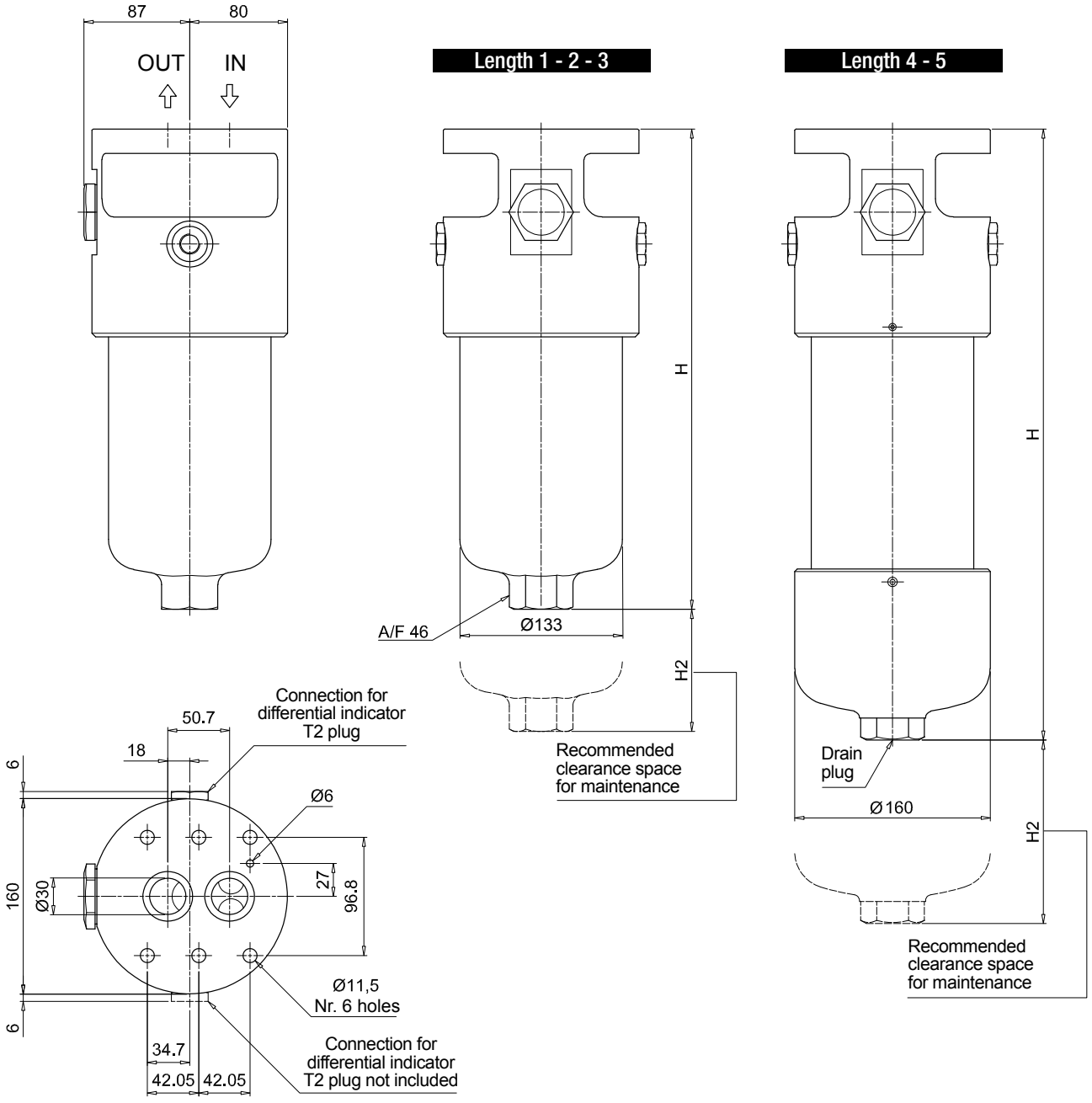

FHM 006 - 007 - 010

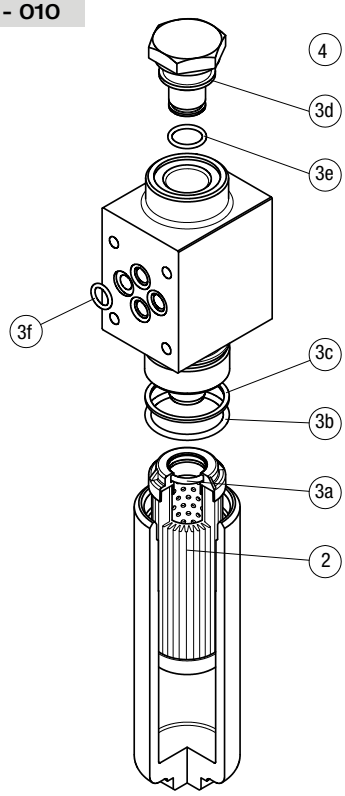

Item:	Q.ty: 1 pc. 2	Q.ty: 1 pc. 3 (3a ÷ 3f)		Q.ty: 1 pc. 4	
Filter series	Filter element	Seal Kit code number NBR	Seal Kit code number FPM	Indicator connection plug NBR	Indicator connection plug FPM
FHM 006	See order table	02050324	02050325	T2H	T2V
FHM 007		02050600	02050601		
FHM 010		02050320	02050321		

FHM 050 - 065 - 135 - 320 - 500

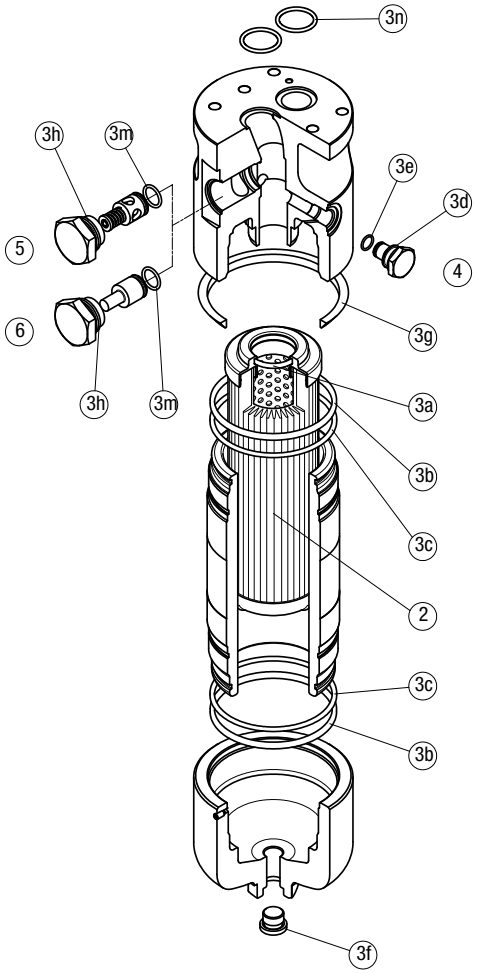

Item:	Q.ty: 1 pc. 2	Q.ty: 1 pc. 3 (3a ÷ 3m)		Q.ty: 1 pc. 4		Q.ty: 1 pc. 5		Q.ty: 1 pc. 6	
Filter series	Filter element	Seal Kit code number NBR	Seal Kit code number FPM	Indicator connection plug NBR	Indicator connection plug FPM	Bypass assembly NBR	Bypass assembly FPM	Non-bypass assembly NBR	Non-bypass assembly FPM
FHM 050	See order table	02050410	02050411	T2H	T2V	02001400	02001401	02001402	02001403
FHM 065		02050268	02050279			02001400	02001401	02001402	02001403
FHM 135		02050271	02050282			02001404	02001405	02001406	02001407
FHM 320		02050275	02050286			02001408	02001409	02001410	02001411
FHM 500		02050332	02050333			02001408	02001409	02001410	02001411

FHB series

Maximum working pressure up to 32 MPa (320 bar) - Flow rate up to 485 l/min



FHB GENERAL INFORMATION

Description

High Pressure filters

Manifold
Maximum working pressure up to 32 MPa (320 bar)
Flow rate up to 485 l/min

FHB is a range of high pressure filter for protection of sensitive components in high pressure hydraulic systems in the mobile machines. They are directly connected to the side of the manifold, through the proper flanged interface.

Available features:
- Manifold connections up to Ø30 mm, for a maximum flow rate of 485 l/min
- Fine filtration rating, to get a good cleanliness level into the system
- Bypass valve, to relieve excessive pressure drop across the filter media
- Check valve, to protect the system against reverse flow
- Low collapse filter element "N", for use with filters provided with bypass valve
- High collapse filter element "H", for use with filters not provided with bypass valve
- High collapse filter element with external support "S", for filter element protection against the back pressure caused by the check valve in filters not provided with the bypass valve
- Visual, electrical and electronic differential clogging indicators

Common applications:
Delivery lines, in any high pressure industrial equipment or mobile machines

Technical data

Filter housing materials
- Head: Phosphatized cast iron
- Housing: Phosphatized steel
- Bypass valve: Steel
- Check valve: Steel

Pressure
- Working pressure: 32 MPa (320 bar)
- Test pressure: 48 MPa (480 bar)
- Burst pressure: 96 MPa (960 bar)
- Pulse pressure fatigue test: 1 000 000 cycles with pressure from 0 to 32 MPa (320 bar)

Bypass valve
- Opening pressure 600 kPa (6 bar) ±10%
- Other opening pressures on request.

Δp element type
- Microfibre filter elements - series N: 20 bar
- Microfibre filter elements - series H: 210 bar (not available for FHB050)
- Microfibre filter elements - series S: 210 bar (only for FHB050)
- Wire mesh filter elements - series N: 20 bar
- Fluid flow through the filter element from OUT to IN

Seals
- Standard NBR series A
- Optional FPM series V

Temperature
From -25 °C to +110 °C

Connections
Manifold mounting

Note
FHB filters are provided for vertical mounting



Weights [kg] and volumes [dm³]

Filter series	Weights [kg]						Volumes [dm³]					
	Length	1	2	3	4	5	Length	1	2	3	4	5
FHB 050		2.61	2.98	3.39	3.86	5.04		0.21	0.30	0.40	0.52	0.81
FHB 065		3.33	3.69	4.90	-	-		0.20	0.27	0.49	-	-
FHB 135		6.61	8.21	9.21	-	-		0.40	0.73	0.94	-	-
FHB 320		12.95	15.08	17.37	26.77	-		0.91	1.63	2.40	3.59	-

FILTER ASSEMBLY SIZING
Flow rates [l/min]

		Filter element design - N Series						Filter element design - S Series				
Filter series	Length	A03	A06	A10	A16	A25	M25	A03	A06	A10	A16	A25
FHB 050	1	43	42	79	81	101	131	30	40	58	60	74
	2	53	58	84	93	112	132	46	50	76	86	108
	3	67	70	94	101	119	133	59	62	87	95	115
	4	82	87	106	108	122	134	74	80	101	103	119
	5	102	104	119	122	127	136	90	92	105	113	126

		Filter element design - N Series						Filter element design - H Series				
Filter series	Length	A03	A06	A10	A16	A25	M25	A03	A06	A10	A16	A25
FHB 065	1	25	33	55	62	87	133	23	25	49	58	81
	2	33	51	70	76	101	134	33	38	66	75	94
	3	60	71	97	103	118	138	60	68	95	102	116
FHB 135	1	67	72	120	129	177	212	49	55	97	100	160
	2	109	116	152	154	224	250	90	110	137	140	182
	3	153	155	201	205	226	253	126	142	175	187	207
FHB 320	1	130	143	238	286	343	442	110	117	192	201	304
	2	259	281	391	409	454	468	200	230	319	325	392
	3	332	368	441	455	463	476	269	312	381	389	432
	4	368	390	446	462	481	488	311	334	388	394	437

Maximum flow rate for a complete pressure filter with a pressure drop Δp = 1.5 bar.
The reference fluid has a kinematic viscosity of 30 mm^2/s (cSt) and a density of 0.86 kg/dm^3.
For different pressure drop or fluid viscosity we recommend to use our selection software available on www.mpfiltri.com.
You can also calculate the right size using the formulas present on the FILTER SIZING paragraph at the beginning of the full catalogue or at the beginning of the filter family brochure.
Please, contact our Sales Department for further additional information.

Hydraulic symbols

Filter series	Style S	Style B	Style T	Style D
FHB 050	•	•	•	•
FHB 065	•	•	•	•
FHB 135	•	•	•	•
FHB 320				

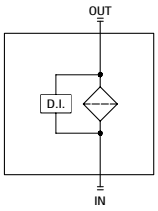

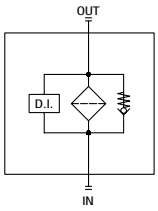

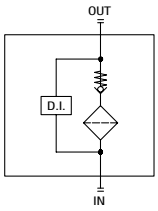

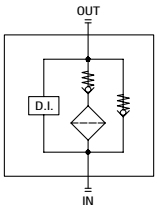

Pressure drop

Filter housings Δp pressure drop

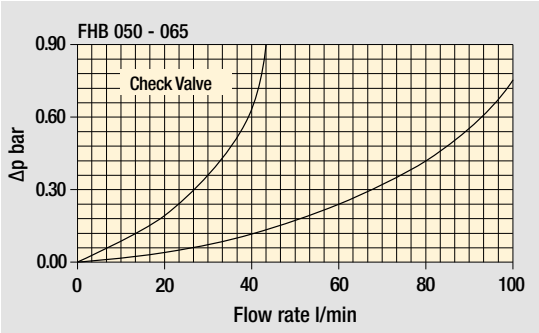

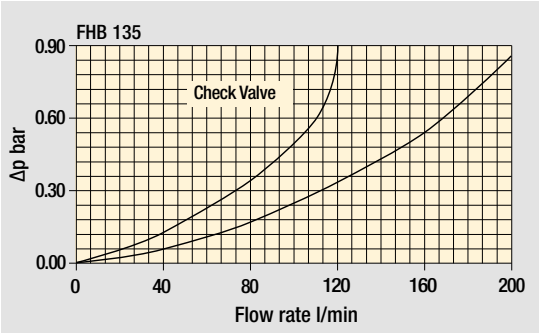

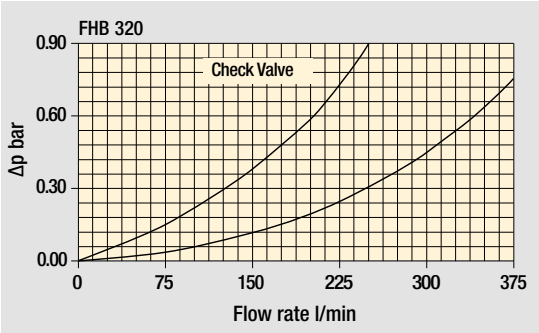

Bypass valve pressure drop

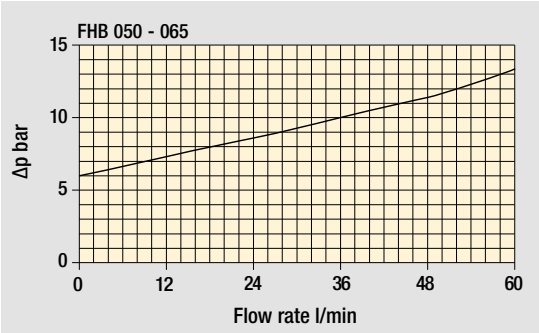

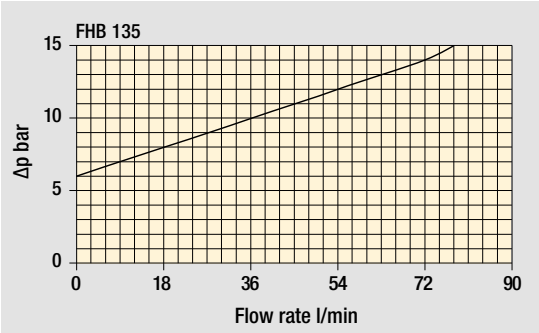

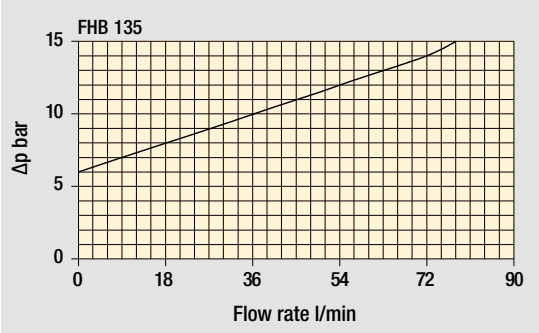

The curves are plotted using mineral oil with density of 0.86 kg/dm^3 in compliance with ISO 3968. Δp varies proportionally with density.

Designation & Ordering code

COMPLETE FILTER

Configuration example: FHB050 | 2 | T | A | F1 | A06 | S | P01

Series and size
FHB050

Length
1 | **2** | **3** | **4** | **5**

Valves

S	Without bypass
B	With bypass 6 bar
T	With check valve, without bypass
D	With check valve, with bypass 6 bar

Seals

A	NBR
V	FPM

Connections

F1	Manifold

Filtration rating (filter media)

A03	Inorganic microfiber	3 µm	**A16**	Inorganic microfiber	16 µm
A06	Inorganic microfiber	6 µm	**A25**	Inorganic microfiber	25 µm
A10	Inorganic microfiber	10 µm	**M25**	Wire mesh	25 µm

Element Δp

		Valves S	B	T	D
N	20 bar		•		•
S	210 bar	•		•	

Execution

P01	MP Filtri standard
Pxx	Customized

FILTER ELEMENT

Configuration example: HP050 | 2 | A06 | A | S | P01

Element series and size
HP050

Element length
1 | **2** | **3** | **4** | **5**

Filtration rating (filter media)

A03	Inorganic microfiber	3 µm	**A16**	Inorganic microfiber	16 µm
A06	Inorganic microfiber	6 µm	**A25**	Inorganic microfiber	25 µm
A10	Inorganic microfiber	10 µm	**M25**	Wire mesh	25 µm

Seals

A	NBR
V	FPM

Element Δp

N	20 bar
S	210 bar

Execution

P01	MP Filtri standard
Pxx	Customized

ACCESSORIES

Differential indicators

		page
DEA	Electrical differential indicator	577
DEH	Hazardous area electronic differential indicator	577-578
DEM	Electrical differential indicator	578-579
DLA	Electrical / visual differential indicator	579-580
DLE	Electrical / visual differential indicator	580
DTA	Electronic differential indicator	581
DVA	Visual differential indicator	581
DVM	Visual differential indicator	581

Additional features

		page
T2	Plug	582

Dimensions

FHB050	
Filter length	**H [mm]**
1	185
2	222
3	264
4	312
5	434

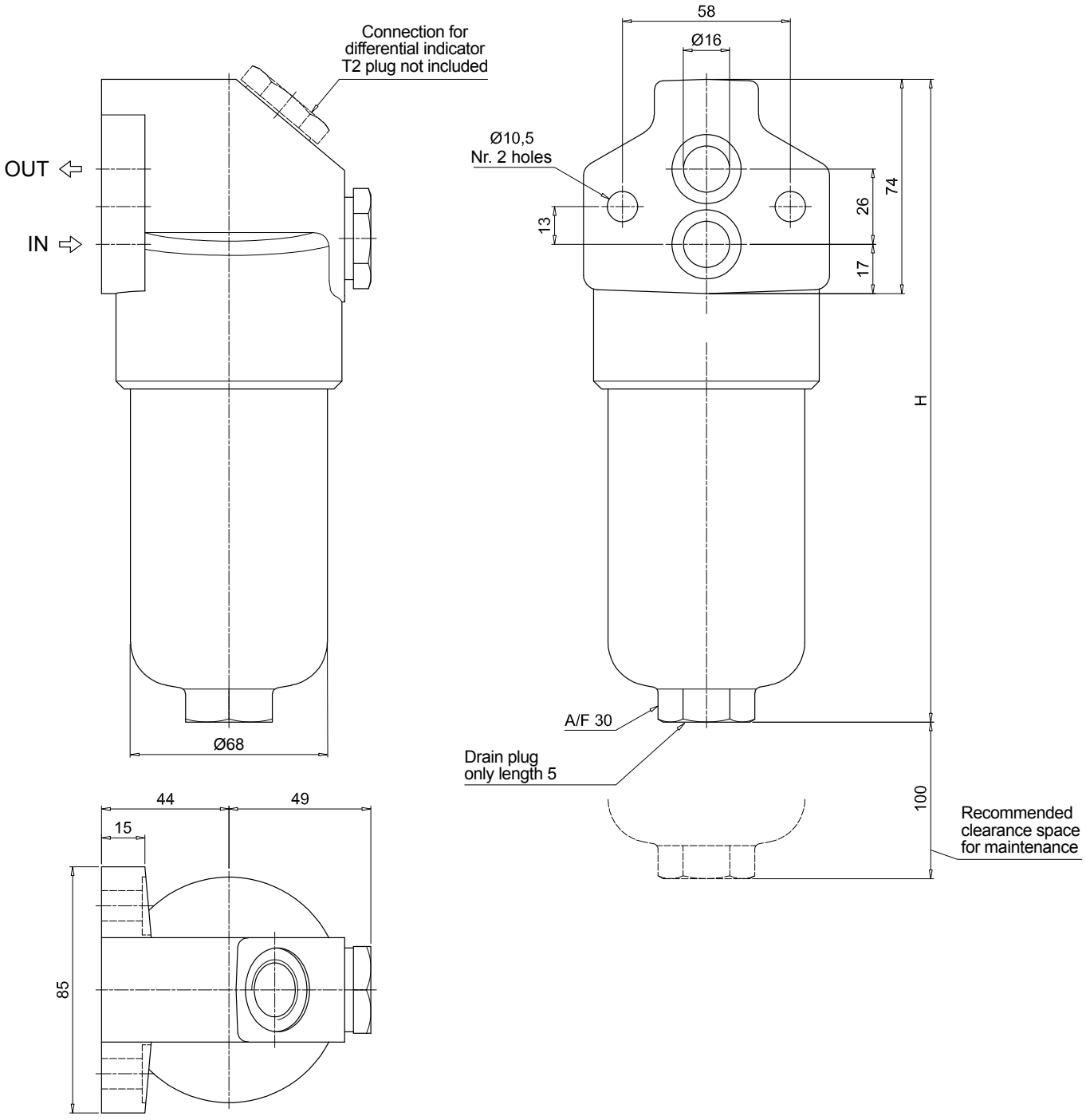

Designation & Ordering code

COMPLETE FILTER

Configuration example: FHB320 | 4 | S | A | F1 | A06 | H | P01

Series and size

FHB065 | FHB135 | FHB320

Length	FHB065	FHB135	FHB320
1	•	•	•
2	•	•	•
3	•	•	•
4			•

Valves

S	Without bypass
B	With bypass 6 bar
T	With check valve, without bypass
D	With check valve, with bypass 6 bar

Seals

A	NBR
V	FPM

Connections

F1	Manifold

Filtration rating (filter media)

A03	Inorganic microfiber	3 µm	**A16**	Inorganic microfiber	16 µm
A06	Inorganic microfiber	6 µm	**A25**	Inorganic microfiber	25 µm
A10	Inorganic microfiber	10 µm	**M25**	Wire mesh	25 µm

Element Δp	Valves S	B	T	D
N 20 bar		•		•
H 210 bar	•		•	

Execution	1	2	3	4
P01 MP Filtri standard	•	•	•	•
P02 Maintenance from the bottom of the housing				•
Pxx Customized				

FILTER ELEMENT

Configuration example: HP320 | 4 | A06 | A | H | P01

Element series and size

HP065 | HP135 | HP320

Element length	HP065	HP135	HP320
1	•	•	•
2	•	•	•
3	•	•	•
4			•

Filtration rating (filter media)

A03	Inorganic microfiber	3 µm	**A16**	Inorganic microfiber	16 µm
A06	Inorganic microfiber	6 µm	**A25**	Inorganic microfiber	25 µm
A10	Inorganic microfiber	10 µm	**M25**	Wire mesh	25 µm

Seals

A	NBR
V	FPM

Element Δp

N	20 bar
H	210 bar

Execution

P01	MP Filtri standard
Pxx	Customized

ACCESSORIES

Differential indicators

		page
DEA	Electrical differential indicator	577
DEH	Hazardous area electronic differential indicator	577-578
DEM	Electrical differential indicator	578-579
DLA	Electrical / visual differential indicator	579-580
DLE	Electrical / visual differential indicator	580
DTA	Electronic differential indicator	581
DVA	Visual differential indicator	581
DVM	Visual differential indicator	581

Additional features

		page
T2	Plug	582

Dimensions

FHB065	
Filter length	**H [mm]**
1	194
2	225
3	327

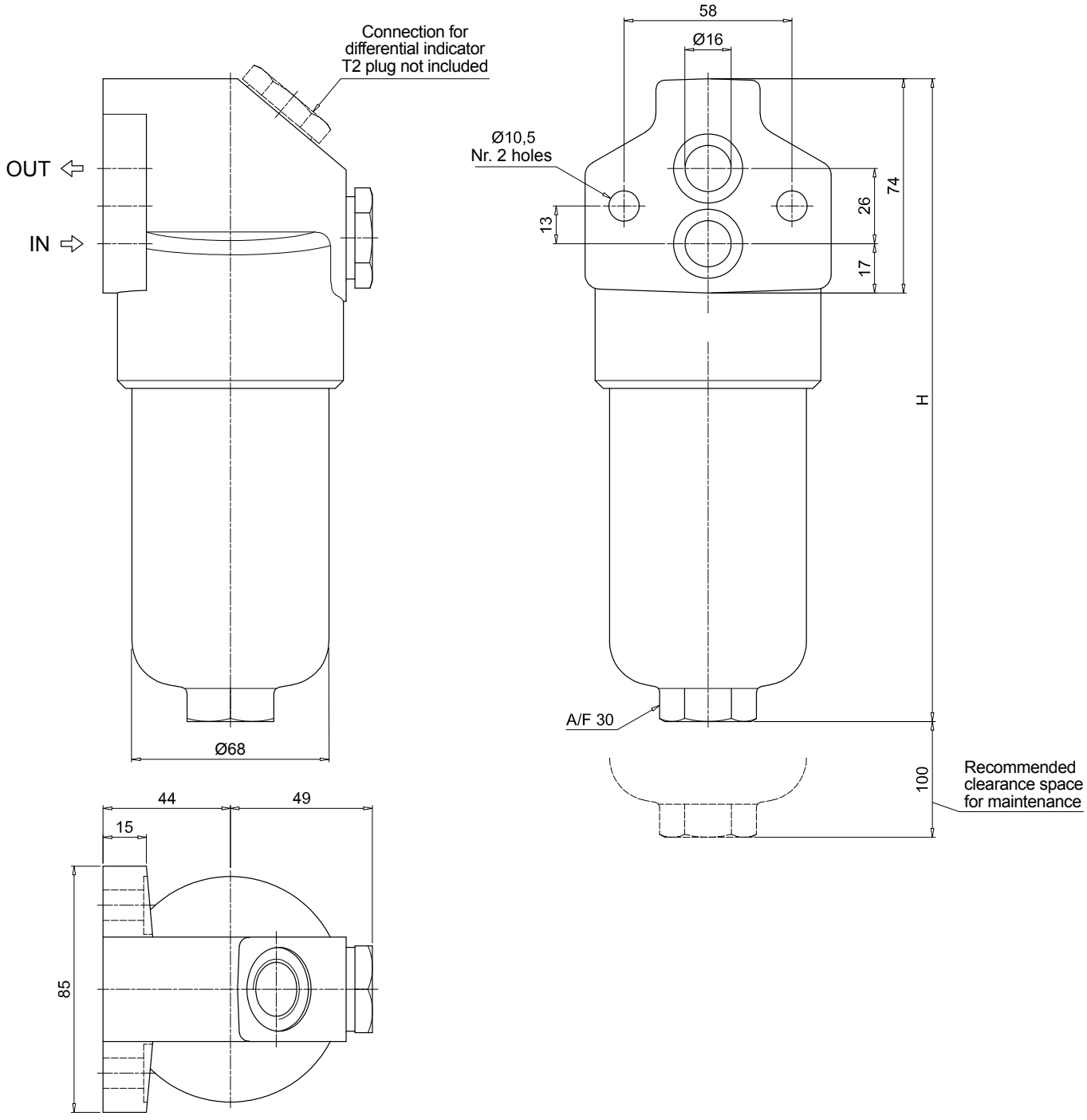

Dimensions

FHB135	
Filter length	**H [mm]**
1	268
2	381
3	456

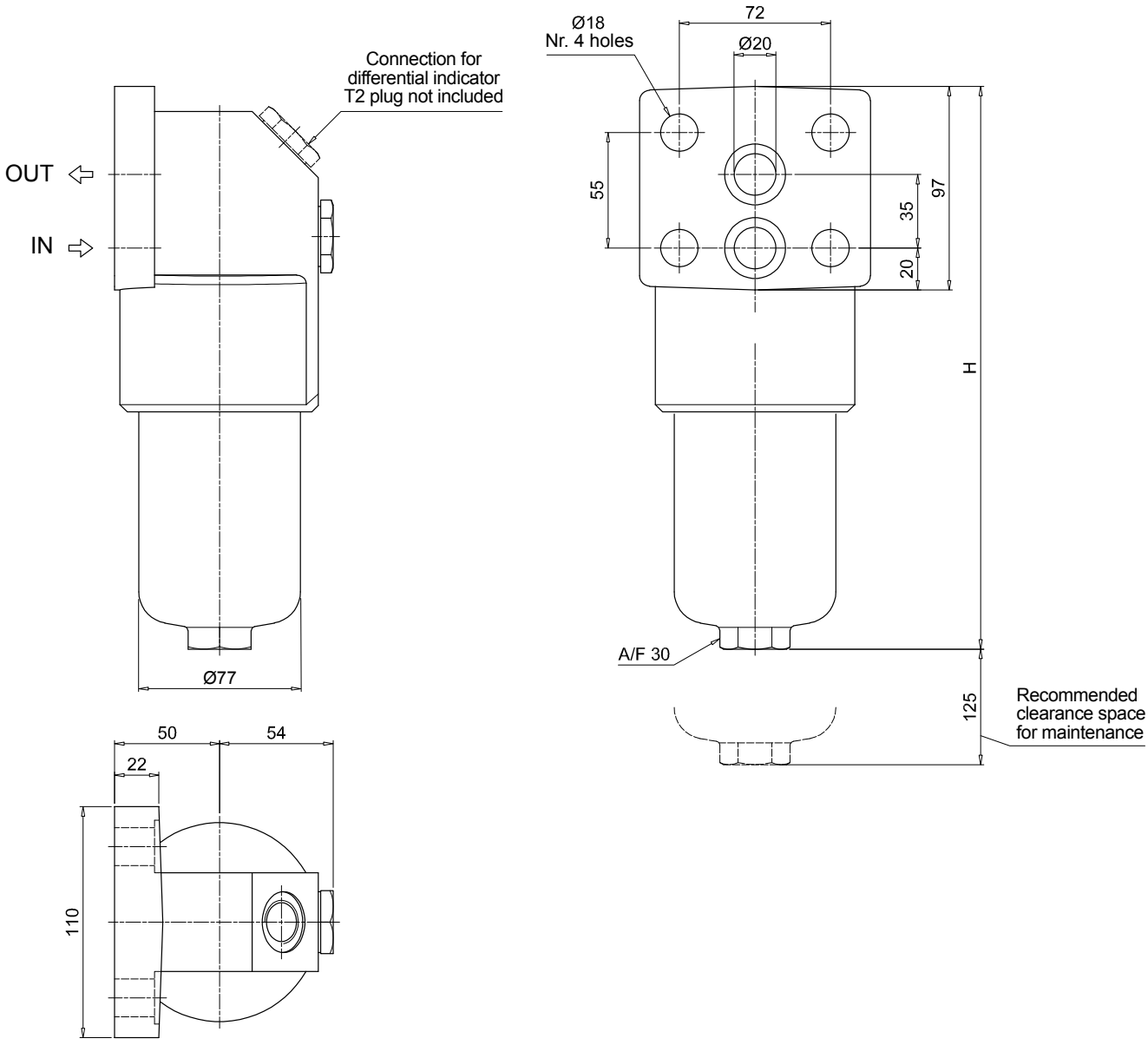

Dimensions

FHB320

Filter length	H [mm]	H2 [mm] Execution P01	P02
1	301	150	-
2	424	150	-
3	556	150	-
4	709	150	550

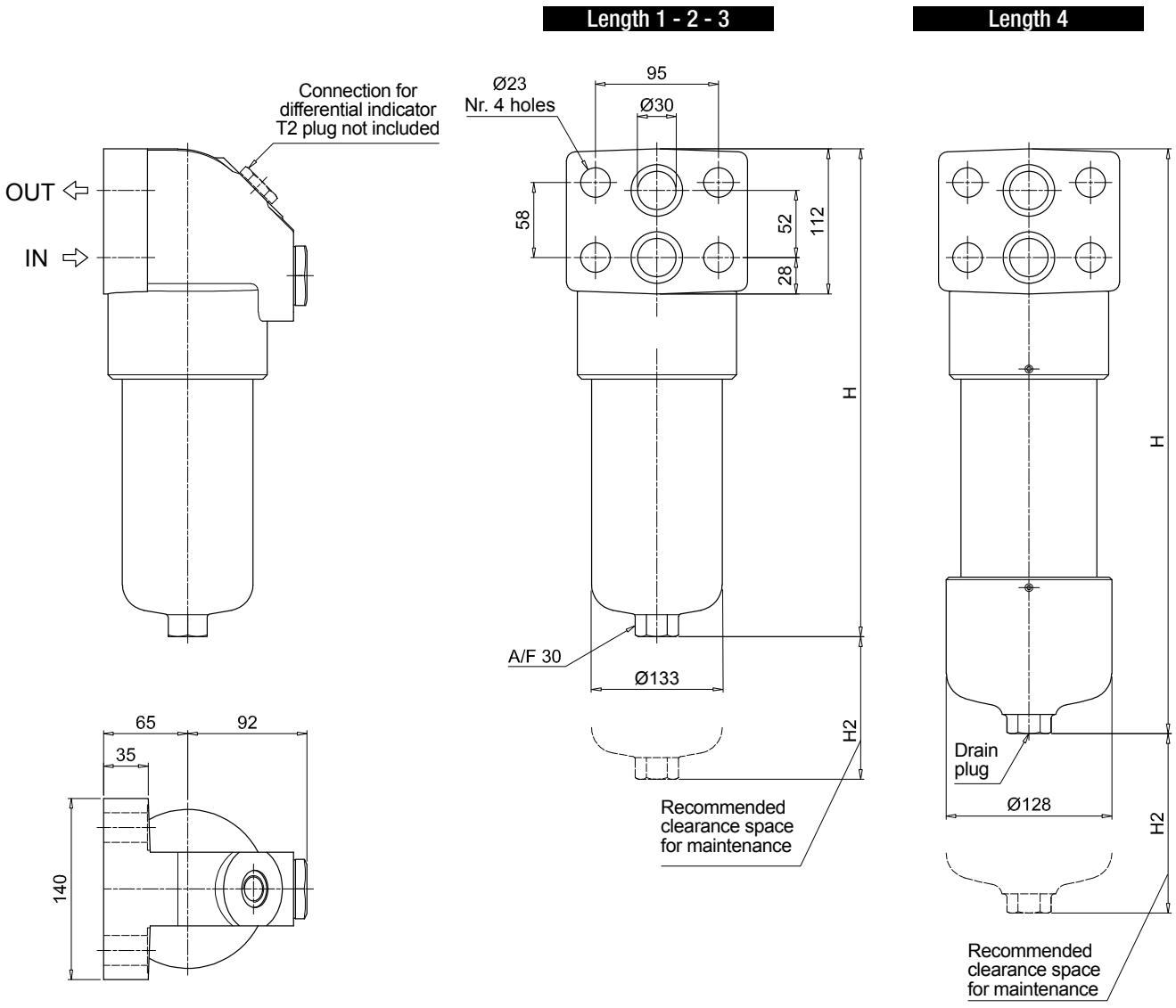

Order number for spare parts

FHB 050 - 065 - 135 - 320

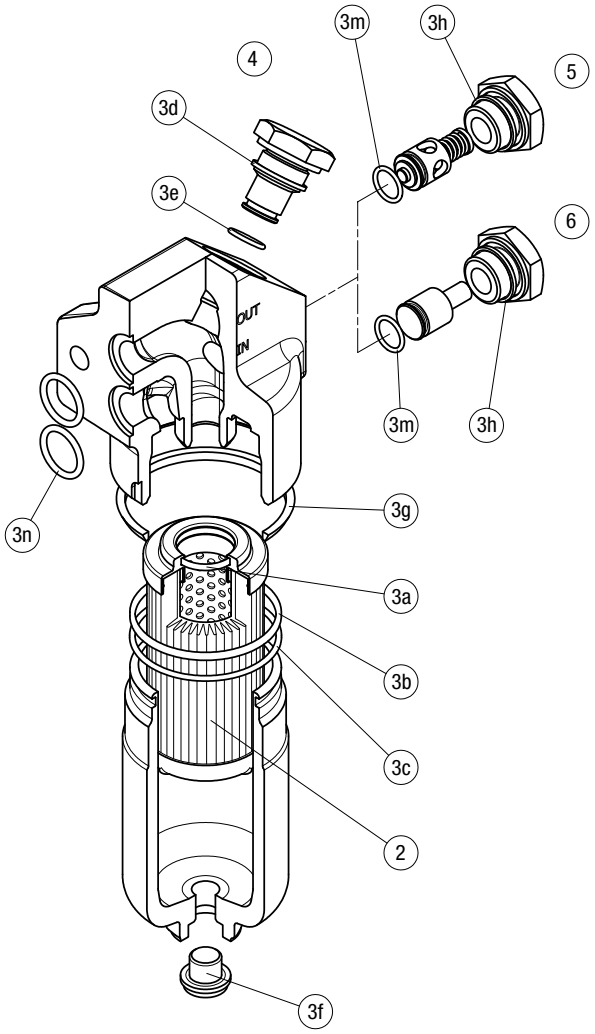

Item:	Q.ty: 1 pc. (2)	Q.ty: 1 pc. (3) (3a ÷ 3n)		Q.ty: 1 pc. (4)		Q.ty: 1 pc. (5)		Q.ty: 1 pc. (6)	
Filter series	**Filter element**	**Seal Kit code number NBR**	**FPM**	**Indicator connection plug NBR**	**FPM**	**Bypass assembly NBR**	**FPM**	**Non-bypass assembly NBR**	**FPM**
FHB 050	See order table	02050412	02050413	T2H	T2V	02001312	02001385	02001314	02001386
FHB 065		02050266	02050277			02001312	02001385	02001314	02001386
FHB 135		02050270	02050281			02001312	02001385	02001314	02001386
FHB 320		02050273	02050284			02001381	02001382	02001383	02001384

FHF 325 series

Maximum working pressure up to 35 MPa (350 bar) - Flow rate up to 550 l/min

Filter housing according to SAE J2066 for HF4 filter elements



FHF 325 GENERAL INFORMATION

Filter housing according to SAE J2066 for HF4 filter elements

Description

High Pressure filters

Manifold
Maximum working pressure up to 35 MPa (350 bar)
Flow rate up to 550 l/min

FHF is a range of high pressure filter for protection of sensitive components in high pressure hydraulic systems in the mobile machines. They are directly connected to the lines of the system through the hydraulic fittings or the proper flanged interface.

Available features:
- 1 1/2" female threaded connections, 1 1/2" flanged connections and manifold connections up to 1 1/2", for a maximum flow rate of 550 l/min
- Base-mounting design, for ease of the replacement of the filter element
- Filter element designed in accordance with SAE J2066 HF4 regulation
- Fine filtration rating, to get a good cleanliness level into the system
- Bypass valve, to relieve excessive pressure drop across the filter media
- Low collapse filter element "N", for use with filters provided with bypass valve
- Visual, electrical and electronic differential clogging indicators

Common applications:
Delivery lines, in any high pressure industrial equipment

Technical data

Filter housing materials
- Head: Phosphatized cast iron
- Housing: Phosphatized steel
- Cover: Cast iron (chemical heat treatment)
- Bypass valve: Brass - Steel

Pressure
- Working pressure: 35 MPa (350 bar)
- Test pressure: 52.5 MPa (525 bar)
- Burst pressure: 105 MPa (1050 bar)
- Pulse pressure fatigue test: 1 000 000 cycles with pressure from 0 to 35 MPa (350 bar)

Bypass valve
- Opening pressure 600 kPa (6 bar) ±10%
- Other opening pressures on request.

Δp element type
- Microfibre filter elements - series N: 20 bar
- Wire mesh filter elements - series N: 20 bar
- Fluid flow through the filter element from OUT to IN

Seals
- Standard NBR series A
- Optional FPM series V

Temperature
From -25 °C to +110 °C

Connections
FHF 325: In-line threaded connection
FHF 325: In-line flanged connection
FHF 325: Manifold mounting

Note
FHF filters are provided for vertical mounting

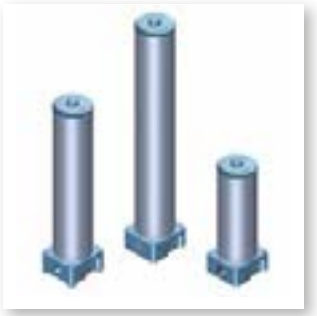

Weights [kg] and volumes [dm³]

Filter series	Weights [kg]				Volumes [dm³]			
	Length	1	2	3	Length	1	2	3
FHF 325		23.90	32.68	41.47		3.50	5.80	8.11

Filter housing according to SAE J2066 for HF4 filter elements

FILTER ASSEMBLY SIZING
Flow rates [l/min]

Filter series	Length	Filter element design - N Series					
		A03	A06	A10	A16	A25	M25
FHF 325	1	302	339	348	419	500	556
	2	401	424	434	457	505	557
	3	416	451	460	469	510	559

Maximum flow rate for a complete pressure filter with a pressure drop Δp = 1.5 bar.
The reference fluid has a kinematic viscosity of 30 mm^2/s (cSt) and a density of 0.86 kg/dm^3.
For different pressure drop or fluid viscosity we recommend to use our selection software available on www.mpfiltri.com.
You can also calculate the right size using the formulas present on the FILTER SIZING paragraph at the beginning of the full catalogue or at the beginning of the filter family brochure.
Please, contact our Sales Department for further additional information.

Hydraulic symbols

Filter series	Style S	Style B
FHF 325	•	•

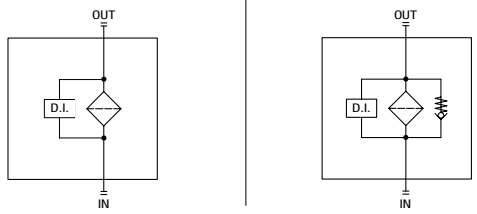

Pressure drop
Filter housings Δp pressure drop

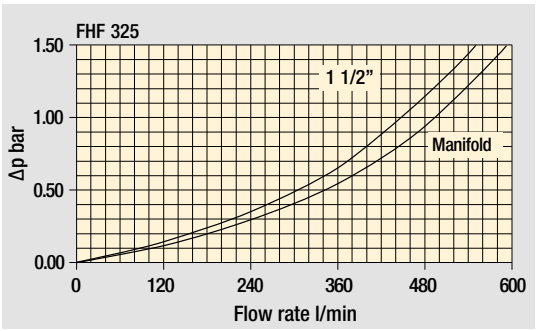

The curves are plotted using mineral oil with density of 0.86 kg/dm^3 in compliance with ISO 3968. Δp varies proportionally with density.

FHF 325

Designation & Ordering code

COMPLETE FILTER

Configuration example: FHF325 | 2 | S | A | H | 7 | A10 | N | P01

Series and size
FHF325

Length
1 | **2** | **3**

Valves
S Without bypass
B With bypass 6 bar

Seals
A NBR
V FPM

Connections
A G 1 1/2”
B 1 1/2” NPT
C SAE 24 - 1 7/8” - 12 UN
G 1 1/2” SAE 6000 psi/M
H 1 1/2” SAE 6000 psi/UNC
M Manifold ø1.38”
N Manifold ø1.50”

Connection for differential indicator
7 With two connections plugged on both sides

Filtration rating (filter media)

A03	Inorganic microfiber	3 µm	**A16**	Inorganic microfiber	16 µm
A06	Inorganic microfiber	6 µm	**A25**	Inorganic microfiber	25 µm
A10	Inorganic microfiber	10 µm	**M25**	Wire mesh	25 µm

Element Δp
N 20 bar

Execution
P01 MP Filtri standard
Pxx Customized

FILTER ELEMENT

Configuration example: HF325 | 2 | A10 | A | N | P01

Element series and size
HF325

Element length
1 | **2** | **3**

Filtration rating (filter media)

A03	Inorganic microfiber	3 µm	**A16**	Inorganic microfiber	16 µm
A06	Inorganic microfiber	6 µm	**A25**	Inorganic microfiber	25 µm
A10	Inorganic microfiber	10 µm	**M25**	Wire mesh	25 µm

Seals
A NBR
V FPM

Element Δp
N 20 bar

Execution
P01 MP Filtri standard
Pxx Customized

ACCESSORIES

Differential indicators

		page
DEA	Electrical differential indicator	577
DEH	Hazardous area electronic differential indicator	577-578
DEM	Electrical differential indicator	578-579
DLA	Electrical / visual differential indicator	579-580
DLE	Electrical / visual differential indicator	580
DTA	Electronic differential indicator	581
DVA	Visual differential indicator	581
DVM	Visual differential indicator	581

Additional features

		page
T2	Plug	582

Dimensions

FHF325		
Connection A - B - C		
Filter length	**H [mm]**	**H2 [mm]**
1	452	250
2	690	485
3	928	725

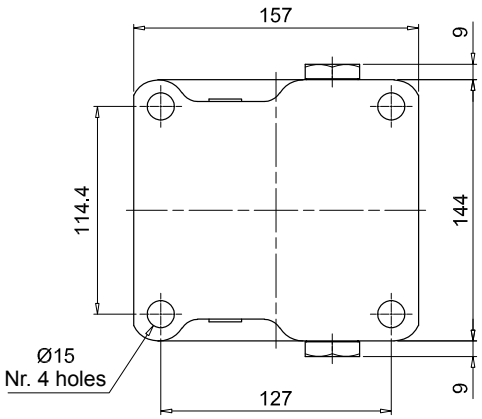

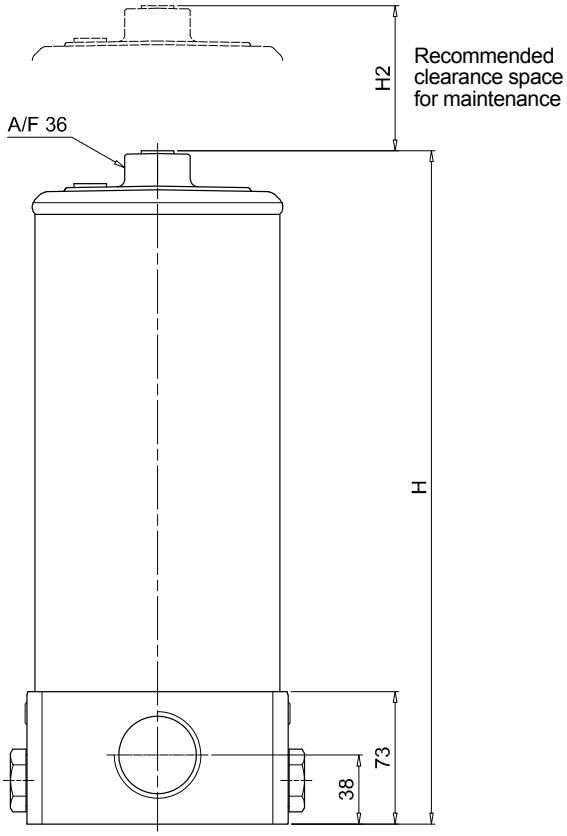

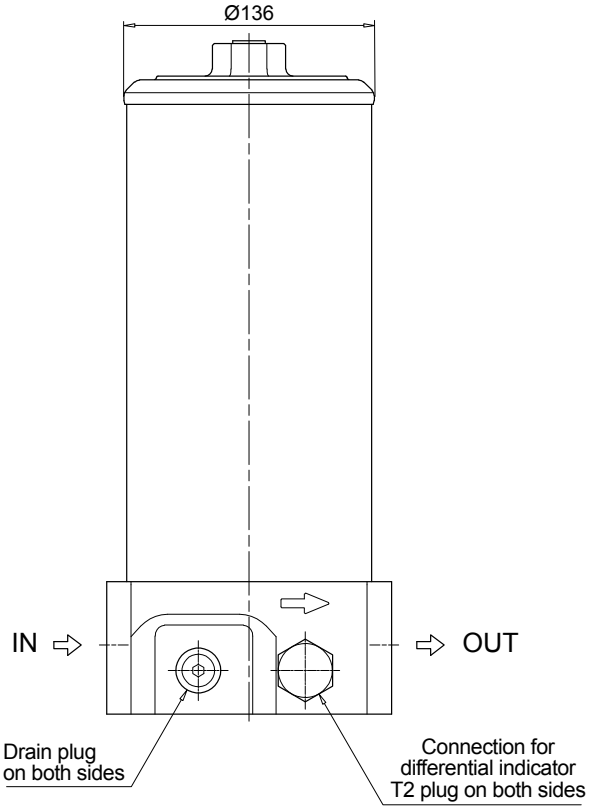

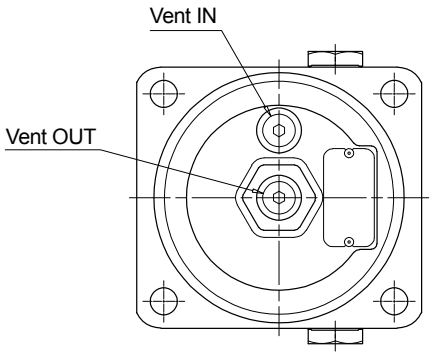

FHF 325

Dimensions

FHF325		
Connection G - H		
Filter length	H [mm]	H2 [mm]
1	463	250
2	701	485
3	939	725

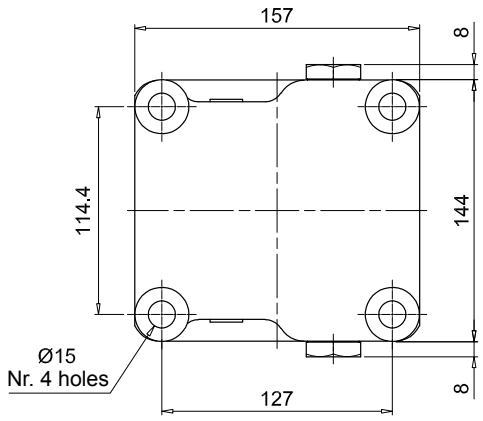

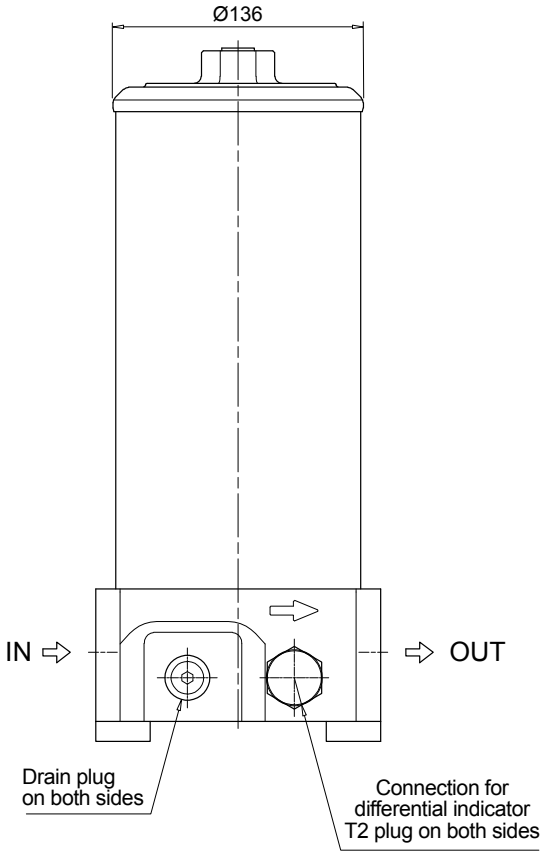

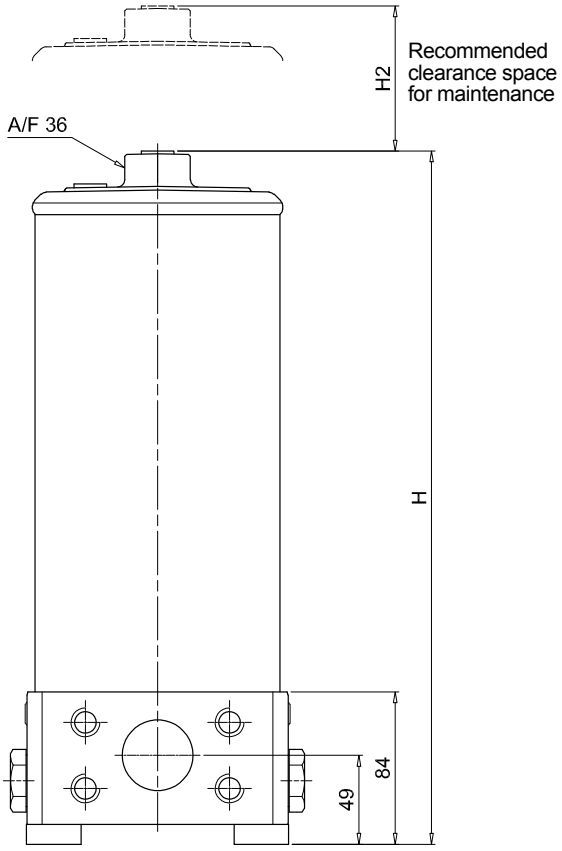

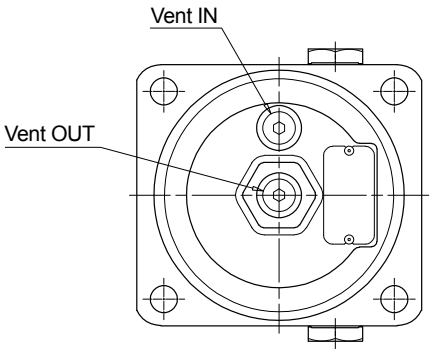

Dimensions

FHF325		
Connection M - N		
Filter length	**H [mm]**	**H2 [mm]**
1	452	250
2	690	485
3	928	725

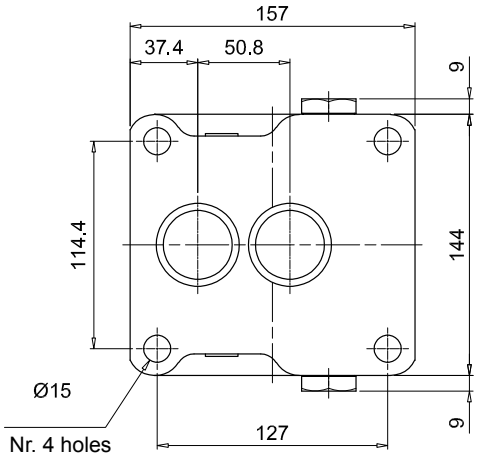

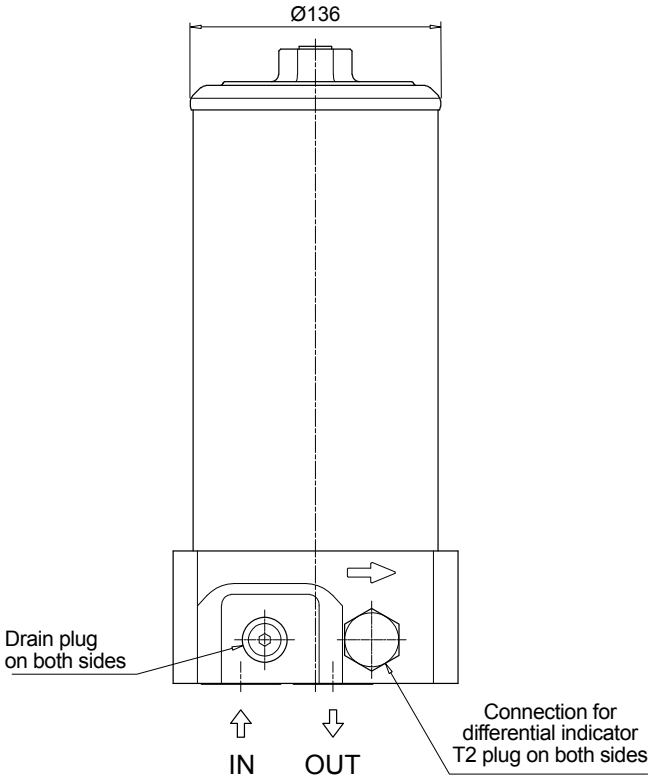

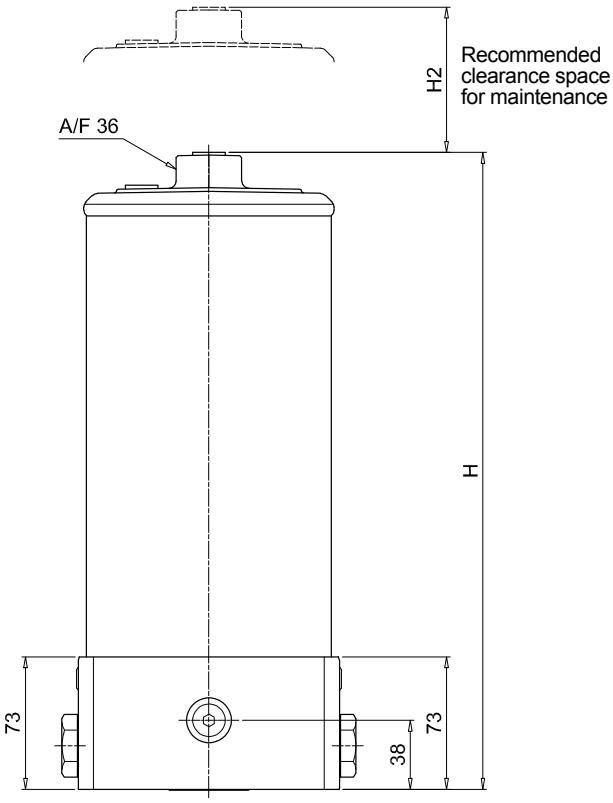

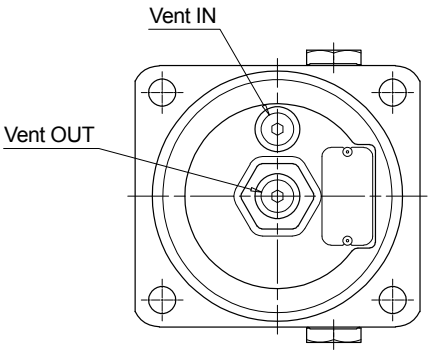

FHF 325 SPARE PARTS

Filter housing according to SAE J2066 for HF4 filter elements

Order number for spare parts

FHF 325

Connections
A - B - C - G - H

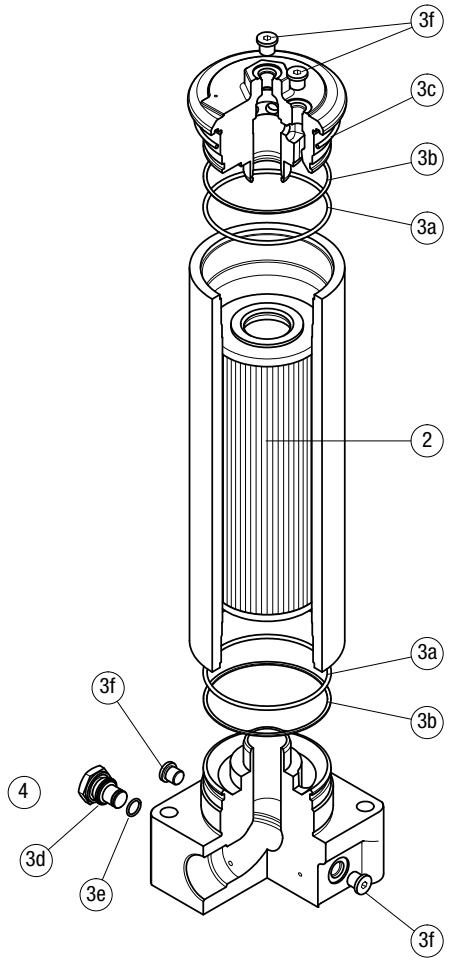

	Q.ty: 1 pc.	Q.ty: 1 pc.		Q.ty: 2 pc.	
Item:	**2**	**3** (3a ÷ 3f)		**4**	
Filter series	**Filter element**	**Seal Kit code number NBR**	**Seal Kit code number FPM**	**Indicator connection plug NBR**	**Indicator connection plug FPM**
FHF 325 A-B-C-G-H	See order table	02050588	02050589	T2H	T2V

FHF 325

Connections
M - N

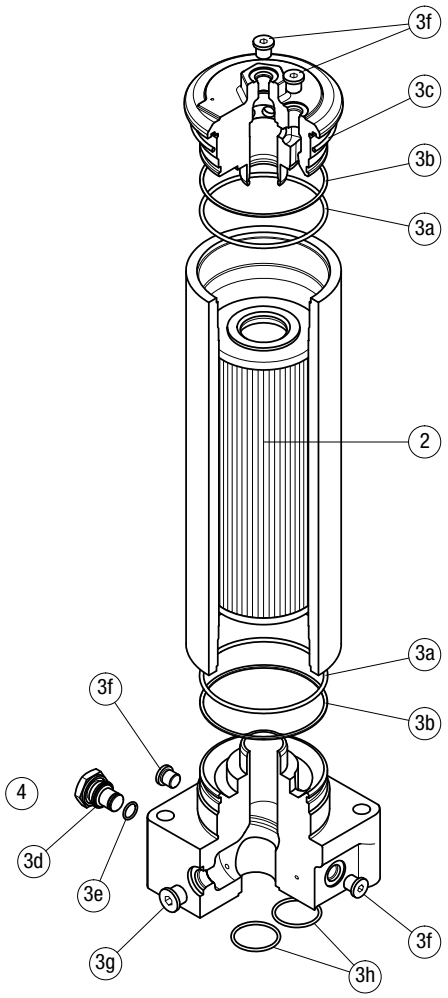

	Q.ty: 1 pc.	Q.ty: 1 pc.		Q.ty: 2 pc.	
Item:	**2**	**3** (3a ÷ 3h)		**4**	
Filter series	**Filter element**	**Seal Kit code number NBR**	**Seal Kit code number FPM**	**Indicator connection plug NBR**	**Indicator connection plug FPM**
FHF 325 M-N	See order table	02050590	02050591	T2H	T2V

FHD series

Maximum working pressure up to 35 MPa (350 bar) - Flow rate up to 250 l/min

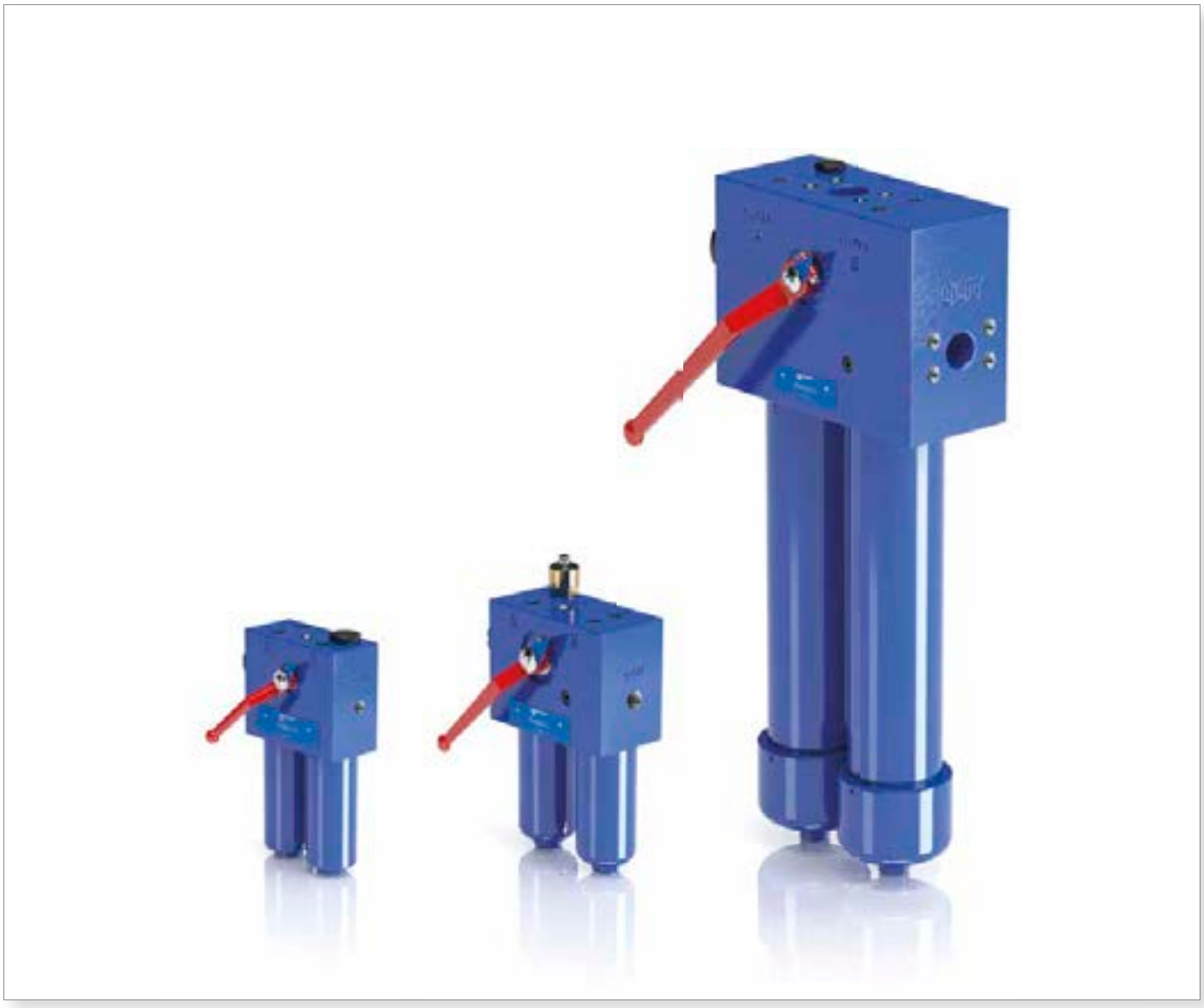

FHD GENERAL INFORMATION

Description

High Pressure filters

Duplex
Maximum working pressure up to 35 MPa (350 bar)
Flow rate up to 250 l/min

FHD is a range of high pressure duplex filter with integrated changeover function to allow the filter element replacement without the system shut-down.
They are directly connected to the lines of the system through the hydraulic fittings.

Available features:
- Female threaded connections up to 1 1/4" and flanged connections up to 1 1/2", for a maximum flow rate of 345 l/min
- Fine filtration rating, to get a good cleanliness level into the system
- Balancing valve, available for FHD051, FHD326 and FHD333, to equalize the housing pressure before the switch.
- Bypass valve, to relieve excessive pressure drop across the filter media
- Vent ports, to avoid air trapped into the filter going into the system
- Drain ports, to remove the fluid from the housing prior the maintenance work
- Low collapse filter element "N", for use with filters provided with bypass valve
- High collapse filter element "H", for use with filters not provided with bypass valve
- Low collapse filter element with external support "R", for filter element protection against the back pressure caused by the check valve or the reverse flow in filters provided with the bypass valve
- High collapse filter element with external support "S", for filter element protection against the back pressure caused by the check valve or the reverse flow in filters not provided with the bypass valve
- Visual, electrical and electronic differential clogging indicators

Common applications:
- System where shut-down causes high costs
- System where shut-down causes safety issues

Technical data

Filter housing materials
- Head: Phosphatized cast iron
- Housing: Phosphatized steel
- Bypass valve: Steel

Pressure
- Test pressure: 52.5 MPa (525 bar)
- Burst pressure: 105 MPa (1050 bar)
- Pulse pressure fatigue test: 1 000 000 cycles with pressure from 0 to 35 MPa (350 bar)

Bypass valve
- Opening pressure 600 kPa (6 bar) ±10%
- Other opening pressures on request.

Δp element type
- Microfibre filter elements - series N: 20 bar
- Microfibre filter elements - series R: 20 bar (not available for FHD 021)
- Microfibre filter elements - series H: 210 bar (only for FHD 021)
- Microfibre filter elements - series S: 210 bar (not available for FHD 021)
- Wire mesh filter elements - series N: 20 bar
- Fluid flow through the filter element from OUT to IN

Seals
- Standard NBR series A
- Optional FPM series V

Temperature
From -25 °C to +110 °C

Connections
In-line Inlet/Outlet 90°

Note
FHD filters are provided for vertical mounting



Weights [kg] and volumes [dm³]

Filter series	Weights [kg]						Volumes [dm³]					
	Length	1	2	3	4	5	Length	1	2	3	4	5
FHD 021		-	8.0	9.0	9.9	-		-	0.06	0.12	0.22	-
FHD 051		-	16.9	17.5	18.5	19.8		-	0.31	0.41	0.53	0.83
FHD 326		43.0	50.0	54.0	-	-		0.88	1.60	2.37	-	-
FHD 333		-	74.0	79.0	98.0	-		-	1.75	2.52	3.35	-

FILTER ASSEMBLY SIZING
Flow rates [l/min]

		Filter element design - H Series					
Filter series	Length	A03	A06	A10	A16	A25	M25
FHD 021	2	6	8	14	16	19	26
	3	10	12	18	20	22	27
	4	13	16	21	22	24	27

		Filter element design - R Series					N Series	Filter element design - S Series				
Filter series	Length	A03	A06	A10	A16	A25	M25	A03	A06	A10	A16	A25
FHD 051	2	39	41	51	54	59	64	35	37	48	51	58
	3	45	46	54	56	61	65	41	43	52	54	60
	4	50	52	58	58	62	65	47	49	56	56	61
	5	56	57	61	62	63	65	53	53	57	59	63
FHD 326	1	93	99	131	142	154	171	83	87	117	120	146
	2	136	141	163	166	173	176	119	128	149	151	163
	3	152	159	171	174	175	177	139	148	161	163	170
FHD 333	2	175	184	224	230	245	249	147	162	199	201	225
	3	204	217	241	245	247	252	179	196	221	224	238
	4	216	224	242	247	253	255	196	204	223	225	239

Maximum flow rate for a complete pressure filter with a pressure drop Δp = 1.5 bar.
The reference fluid has a kinematic viscosity of 30 mm^2/s (cSt) and a density of 0.86 kg/dm^3.
For different pressure drop or fluid viscosity we recommend to use our selection software available on www.mpfiltri.com.
You can also calculate the right size using the formulas present on the FILTER SIZING paragraph at the beginning of the full catalogue or at the beginning of the filter family brochure.
Please, contact our Sales Department for further additional information.

Hydraulic symbols

Filter series	Style S	Style B	Style B
FHD 021	•		
FHD 051	•	•	
FHD 326	•		•
FHD 333	•		•

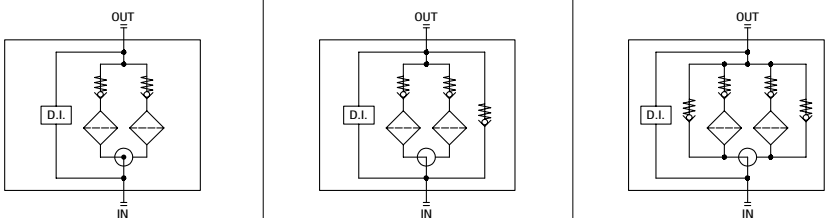

Pressure drop

Filter housings Δp pressure drop

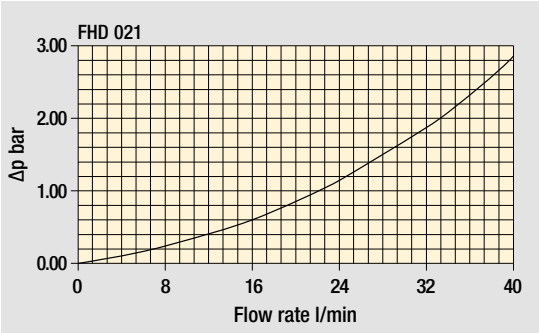

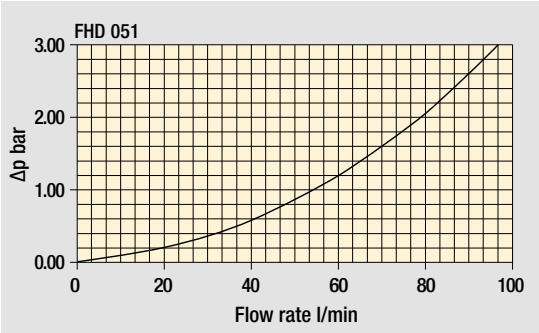

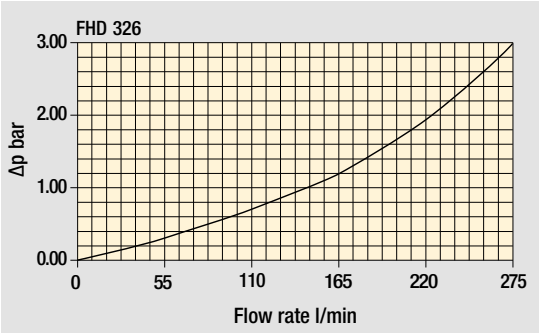

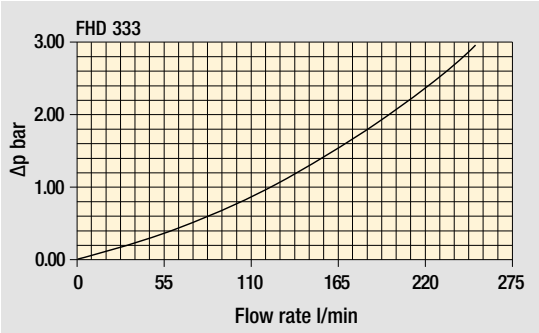

Bypass valve pressure drop

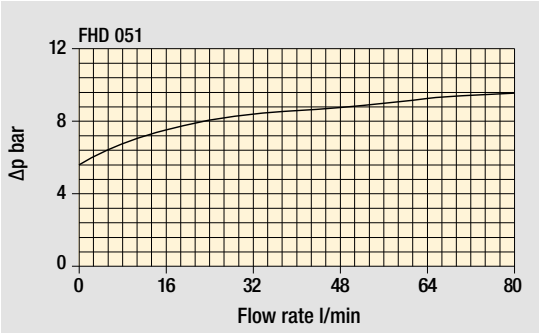

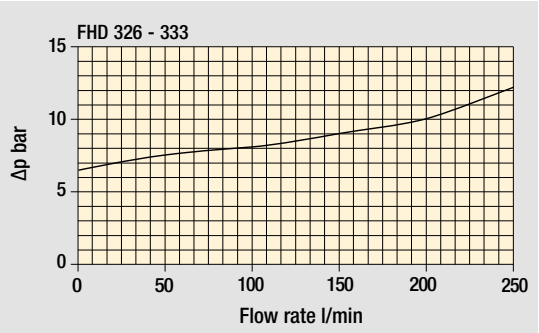

The curves are plotted using mineral oil with density of 0.86 kg/dm^3 in compliance with ISO 3968. Δp varies proportionally with density.

FHD FHD021

Designation & Ordering code

COMPLETE FILTER

Configuration example: FHD021 | 4 | S | A | G1 | A06 | H | P01

Series and size
FHD021

Length
2 | **3** | **4**

Valves
S Without bypass

Seals
A NBR
V FPM

Connections
G1 G 1/2”
G2 1/2” NPT
G3 SAE 8 - 3/4” - 16 UNF

Filtration rating (filter media)

A03	Inorganic microfiber	3 µm	**A16**	Inorganic microfiber	16 µm
A06	Inorganic microfiber	6 µm	**A25**	Inorganic microfiber	25 µm
A10	Inorganic microfiber	10 µm	**M25**	Wire mesh	25 µm

Element Δp		Filtration rating Axx	Filtration rating M25
N	20 bar		•
H	210 bar	•	

Execution
P01 MP Filtri standard
Pxx Customized

FILTER ELEMENT

Configuration example: HP011 | 4 | A06 | A | H | P01

Element series and size
HP011

Element length
2 | **3** | **4**

Filtration rating (filter media)

A03	Inorganic microfiber	3 µm	**A16**	Inorganic microfiber	16 µm
A06	Inorganic microfiber	6 µm	**A25**	Inorganic microfiber	25 µm
A10	Inorganic microfiber	10 µm	**M25**	Wire mesh	25 µm

Seals
A NBR
V FPM

Element Δp		Filtration rating Axx	Filtration rating M25
N	20 bar		•
H	210 bar	•	•

Execution
P01 MP Filtri standard
Pxx Customized

ACCESSORIES

Differential indicators		page
DEA	Electrical differential indicator	577
DEH	Hazardous area electronic differential indicator	577-578
DEM	Electrical differential indicator	578-579
DLA	Electrical / visual differential indicator	579-580
DLE	Electrical / visual differential indicator	580
DTA	Electronic differential indicator	581
DVA	Visual differential indicator	581
DVM	Visual differential indicator	581

Additional features		page
T2	Plug	582

FHD021	
Filter length	**H [mm]**
2	172
3	222
4	272

Connections	**R**
G1	M6
G2 - G3	1/4" UNC

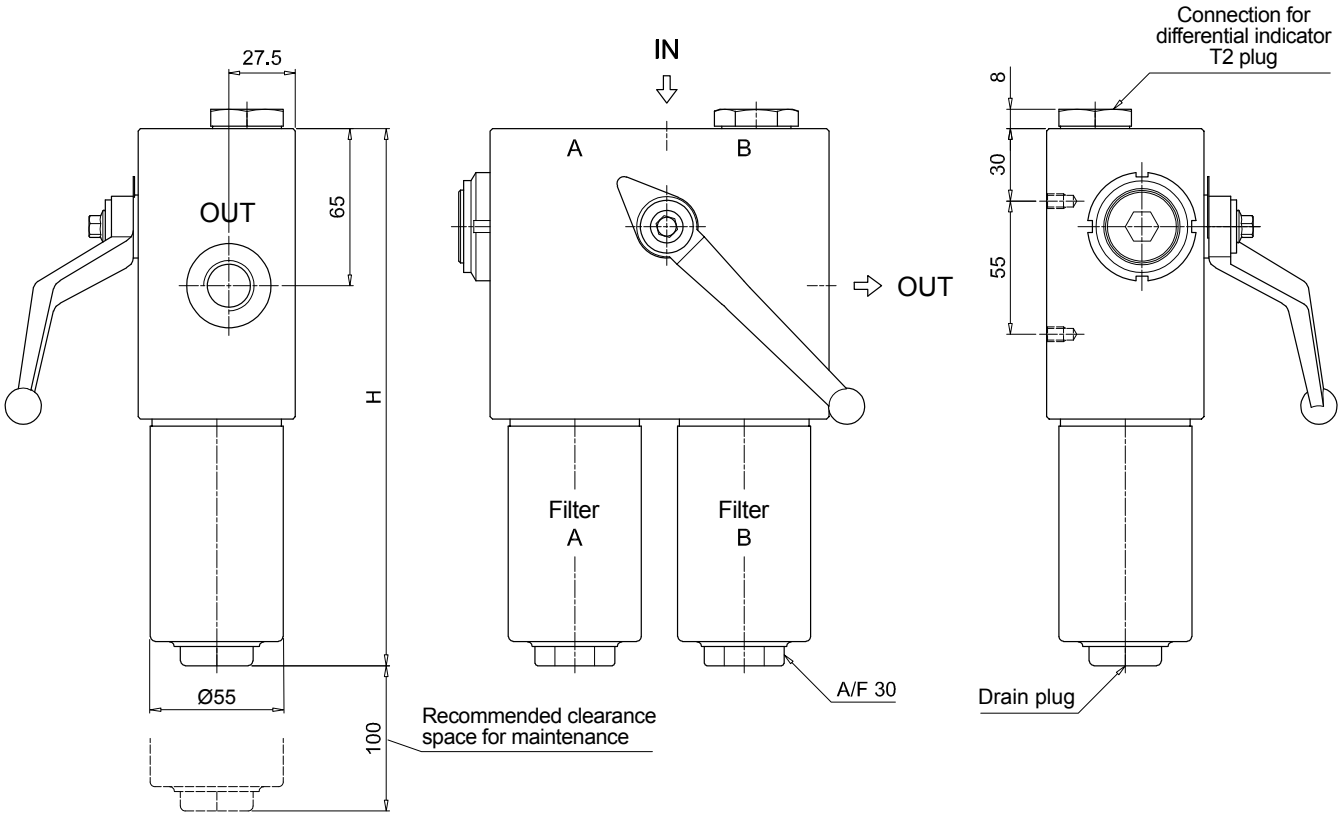

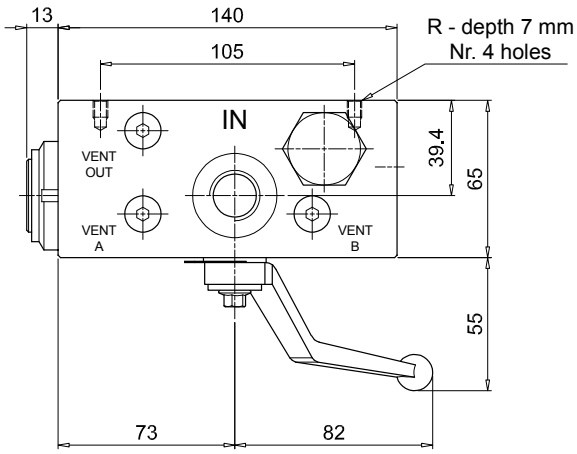

FHD FHD051 - FHD326 - FHD333

Designation & Ordering code

COMPLETE FILTER

Configuration example: FHD326 | 3 | S | A | G1 | M25 | N | P01

Series and size

FHD051 | **FHD326** | **FHD333**

Length	FHD051	FHD326	FHD333
1		•	
2	•	•	•
3	•	•	•
4	•		•
5	•		

Valves

S	Without bypass
B	With bypass 6 bar

Seals

A	NBR
V	FPM

Connections	FHD051	FHD326	FHD333
G1	G 3/4”	G 1 1/4”	-
G2	3/4” NPT	-	-
G3	G 1/2”	1 1/4” NPT	-
G4	1/2” NPT	SAE 20 - 1 5/8” - 12 UN	-
G5	SAE 8 - 3/4” - 16 UNF	-	-
G6	SAE 12 - 1 1/16” - 12 UN	-	-
F1	-	-	1 1/2” SAE 6000 psi/M
F2	-	-	1 1/2” SAE 6000 psi/UNC

Filtration rating (filter media)

A03	Inorganic microfiber	3 µm
A06	Inorganic microfiber	6 µm
A10	Inorganic microfiber	10 µm
A16	Inorganic microfiber	16 µm
A25	Inorganic microfiber	25 µm
M25	Wire mesh	25 µm

Element Δp		Filtration rating Axx	Filtration rating M25
N	20 bar		•
R	20 bar	•	•
S	210 bar	•	•

Execution	
P01	MP Filtri standard
Pxx	Customized

FILTER ELEMENT

Configuration example: HP320 | 3 | M25 | A | N | P01

Element series and size

	FHD051	FHD326	FHD333
HP050	•		
HP320		•	•

Element length	HP050	HP320
1		•
2	•	•
3	•	•
4	•	•
5	•	

Filtration rating (filter media)

A03	Inorganic microfiber	3 µm
A06	Inorganic microfiber	6 µm
A10	Inorganic microfiber	10 µm
A16	Inorganic microfiber	16 µm
A25	Inorganic microfiber	25 µm
M25	Wire mesh	25 µm

Seals	
A	NBR
V	FPM

Element Δp		Filtration rating Axx	Filtration rating M25
N	20 bar		•
R	20 bar	•	•
S	210 bar	•	•

Execution	
P01	MP Filtri standard
Pxx	Customized

ACCESSORIES

Differential indicators		page
DEA	Electrical differential indicator	577
DEH	Hazardous area electronic differential indicator	577-578
DEM	Electrical differential indicator	578-579
DLA	Electrical / visual differential indicator	579-580
DLE	Electrical / visual differential indicator	580
DTA	Electronic differential indicator	581
DVA	Visual differential indicator	581
DVM	Visual differential indicator	581

Additional features		page
T2	Plug	582

Dimensions

FHD051	
Filter length	**H [mm]**
2	253
3	295
4	343
5	465

Connections	**R**
G1	M6
G2	1/4" UNC
G3	M6
G4-G5-G6	1/4" UNC

Valves	**L [mm]**	**L1 [mm]**	**M [mm]**
S	168	138	84
B	182.5	152.5	98.5

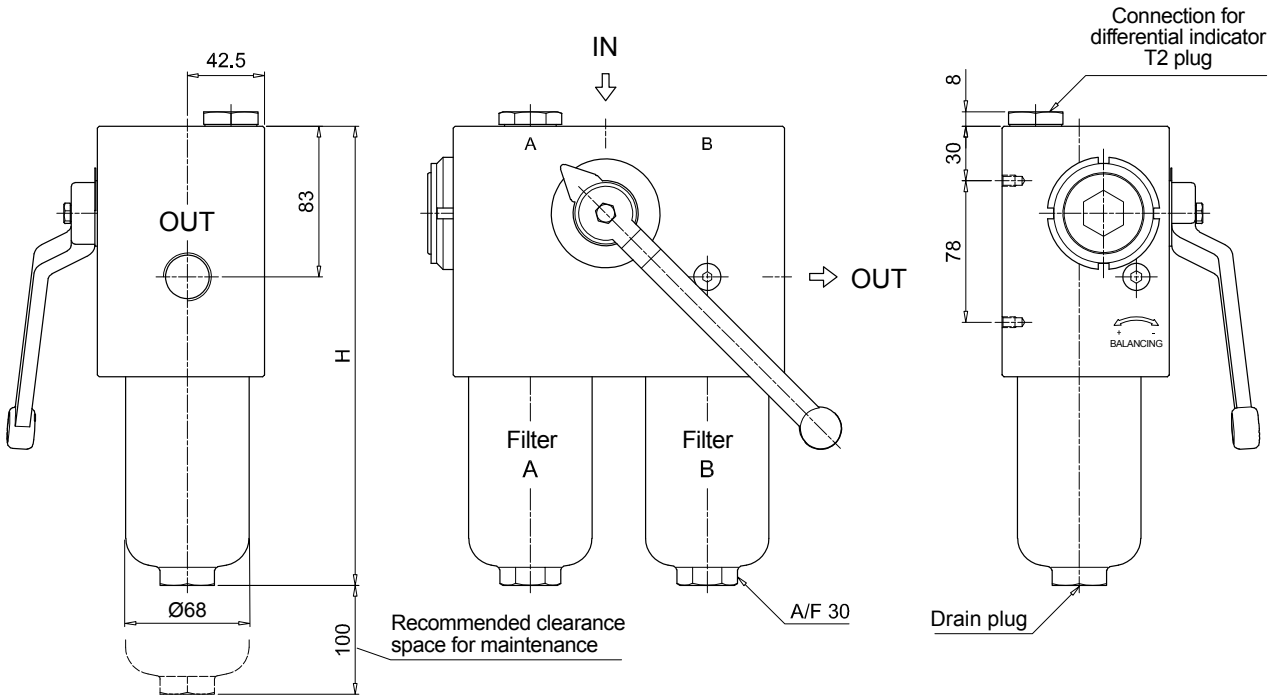

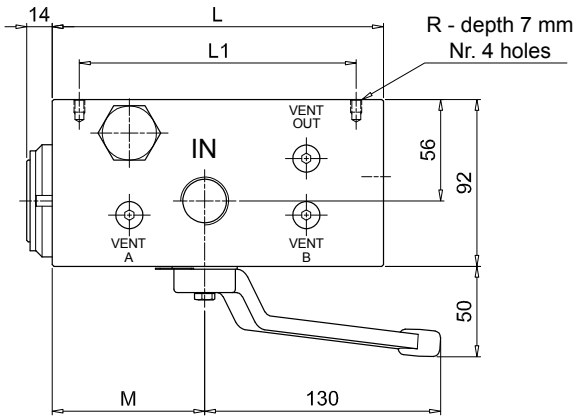

Dimensions

FHD326	
Filter length	**H [mm]**
1	309
2	432
3	564

Connections	R
G1	M10
G2 - G3	3/8" UNC

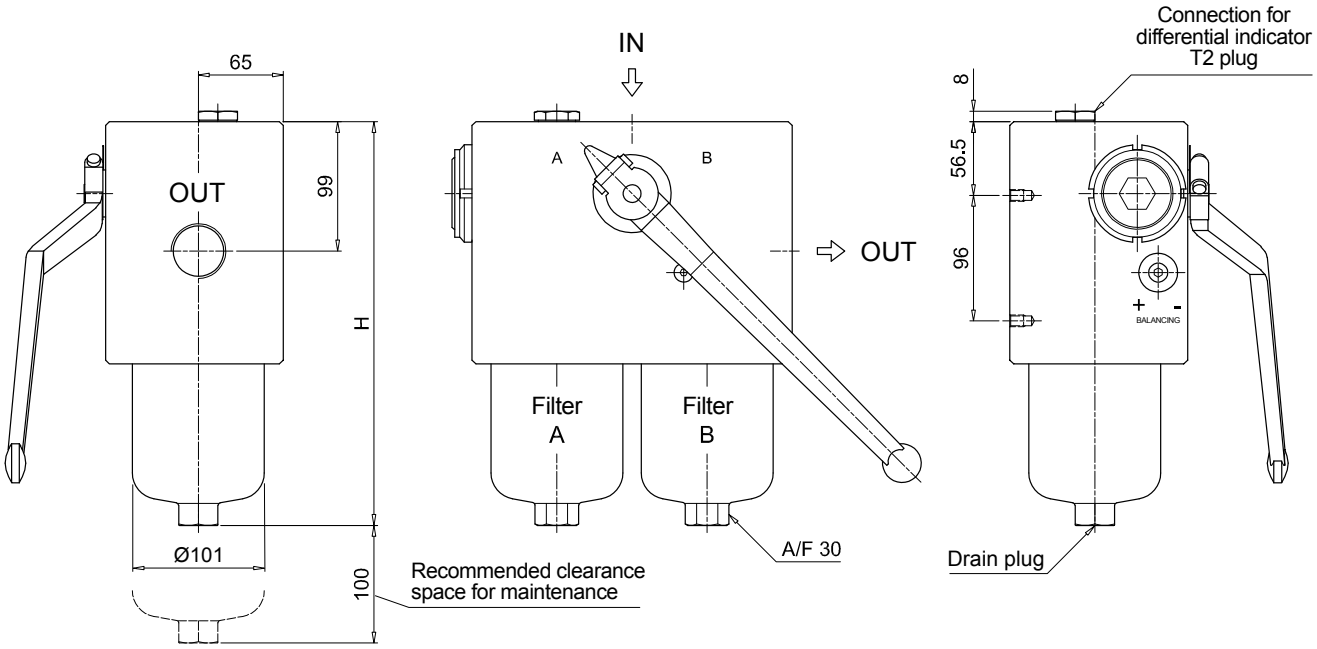

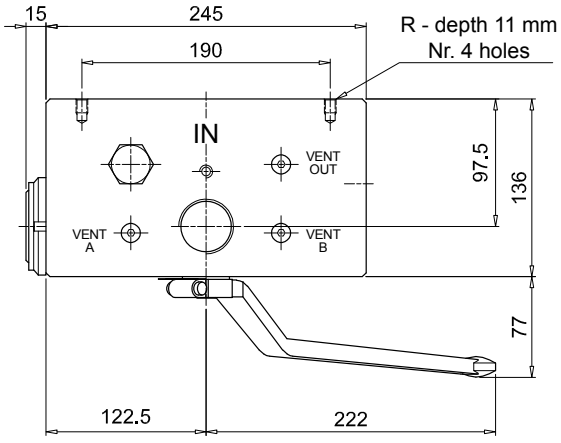

Dimensions

FHD333	
Length 2 - 3	
Filter length	**H [mm]**
2	479
3	612

Connections	**R**
F1	M10
F2	3/8" UNC

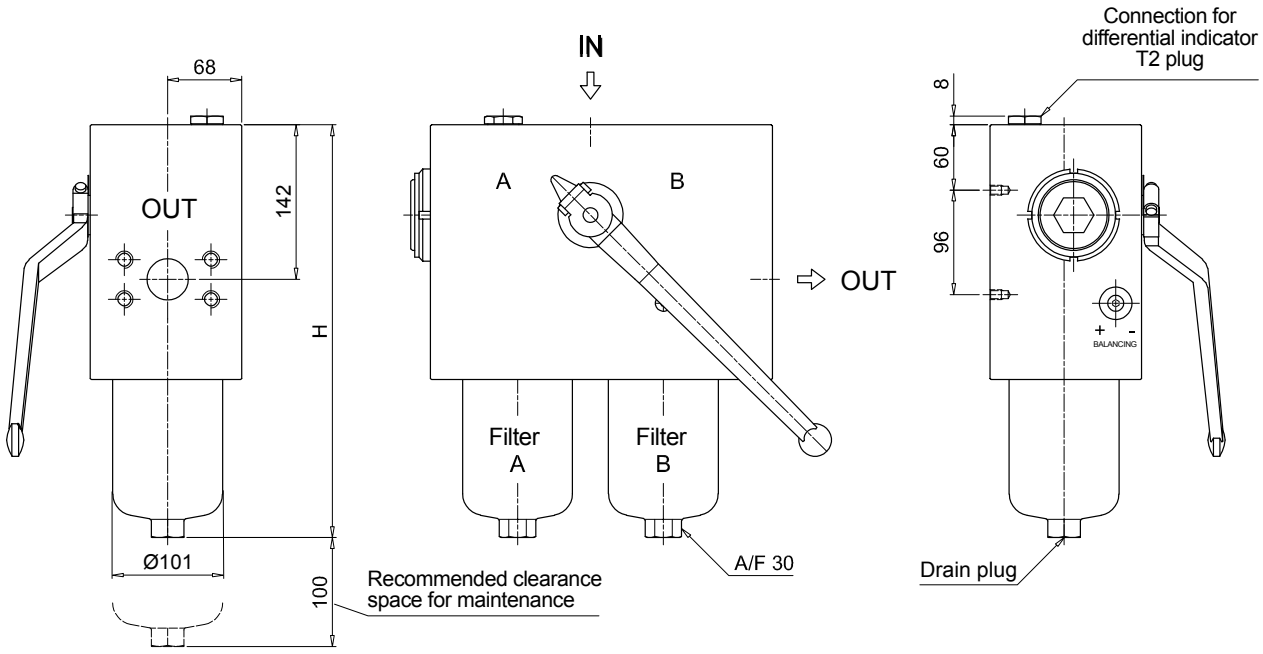

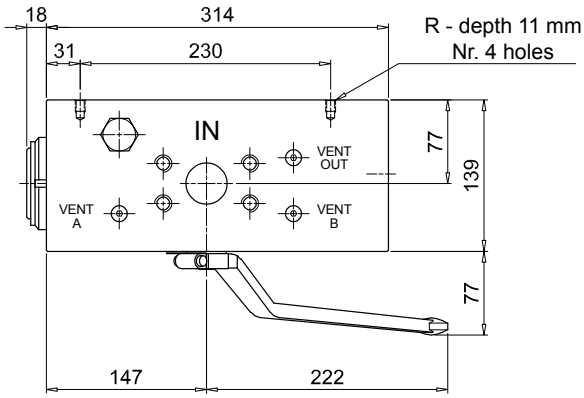

Dimensions

FHD333	
Length 4	
Connections	**R**
F1	M10
F2	3/8" UNC

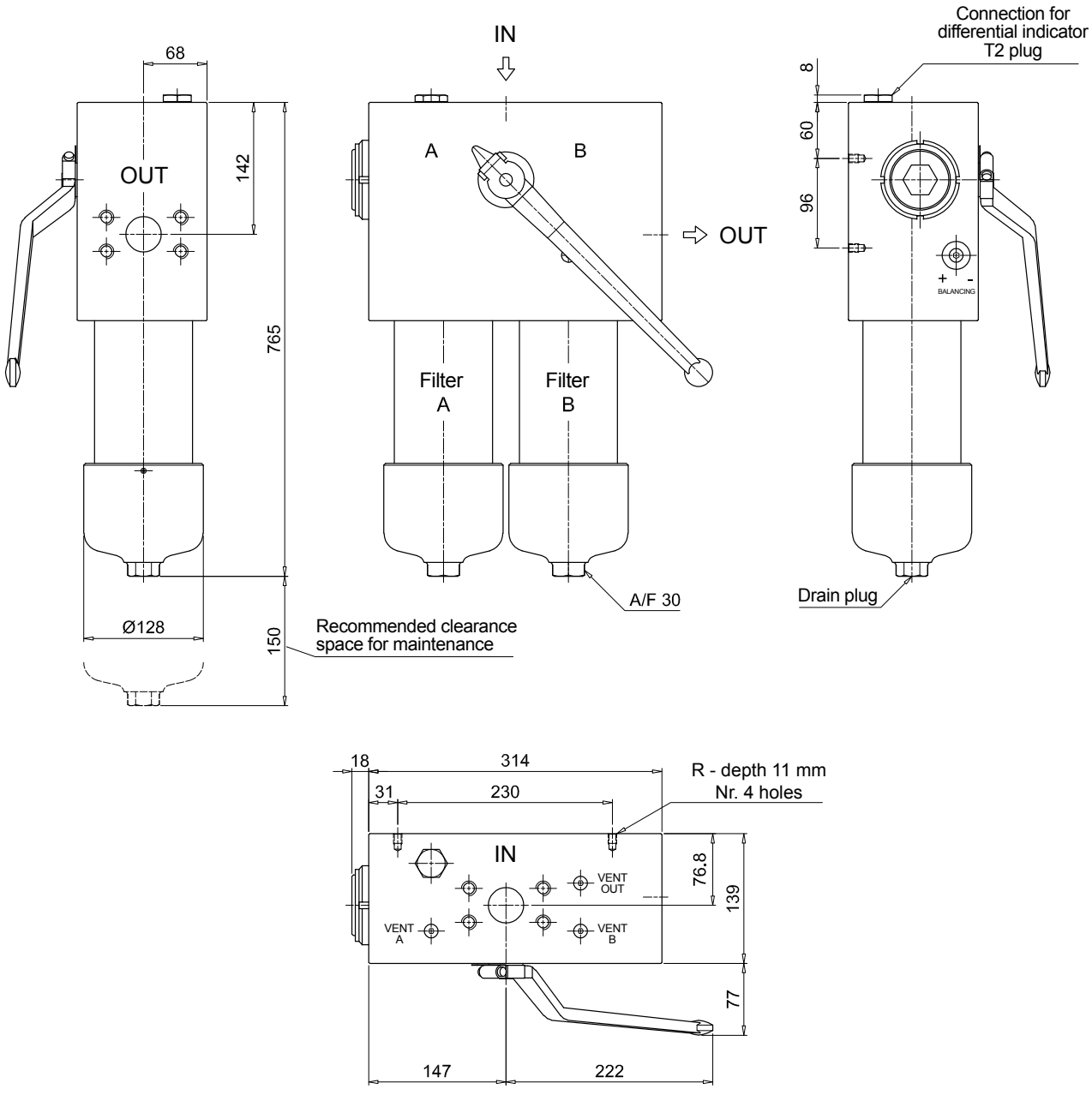

FHD 021 - 051 - 326 - 333

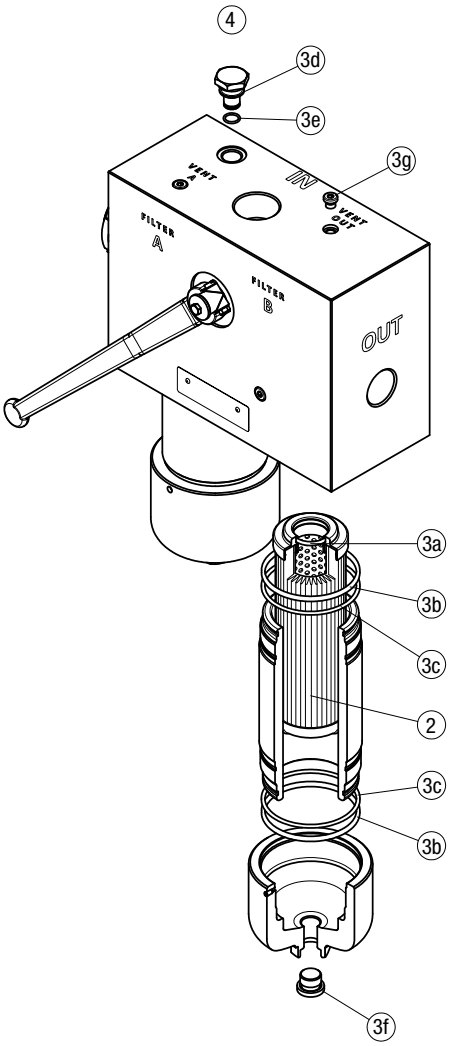

Item:	Q.ty: 1 pc. 2	Q.ty: 1 pc. 3 (3a ÷ 3g)		Q.ty: 1 pc. 4	
Filter series	Filter element	Seal Kit code number NBR	FPM	Indicator connection plug NBR	FPM
FHD 021	See order table	02050511	02050512	T2H	T2V
FHD 051		02050420	02050421		
FHD 326-333		02050377	02050378		

Clogging indicators

Differential indicators

Introduction

Filter elements are efficient only if their Dirt Holding Capacity is fully exploited. This is achieved by using filter housings equipped with clogging indicators.

These devices trip when the clogging of the filter element causes an increase in pressure drop across the filter element.

The indicator is set to alarm before the element becomes fully clogged.

MP Filtri can supply indicators of the following designs:

- Vacuum switches and gauges
- Pressure switches and gauges
- Differential pressure indicators

These type of devices can be provided with a visual, electrical or both signals.

The electronic model (only available for differential type indicators) with warning signals (75% of clogging) and alarm (clogging).

Suitable indicator types

DIFFERENTIAL INDICATORS

Differential indicators are used on the Pressure line to check the efficiency of the filter element. They measure the pressure upstream and downstream of the filter element (differential pressure).
Standard items are produced with special connection G 1/2" size.
Also available in Stainless Steel models.

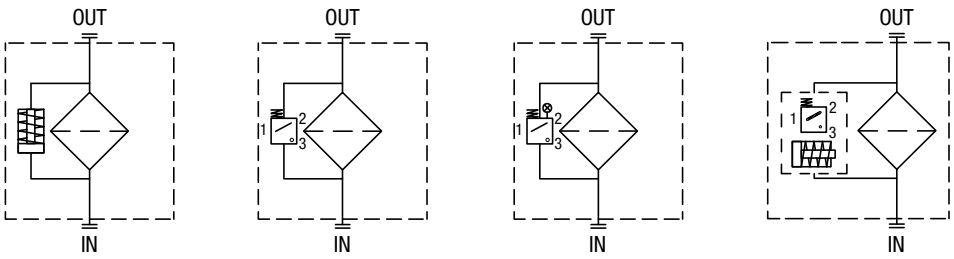

Quick reference guide

	Filter series	Visual indicator	Electrical indicator	Electrical / Visual indicator	Electronic indicator	Hazardous area electronic indicator (NEW)
With bypass valve	FMP 039 - 065 - 135 - 320 FHP 010 - 011 - 065 - 135 - 350 - 500 FMM 050 - 150 FHA 051 FHM 006 - 007 - 010 - 050 - 065 - 135 - 320 - 500 FHB 050 - 135 - 320 FHF 325 FHD 021 - 051 - 326 - 333	DVA50xP01 DVM50xP01	DEA50xA50P01 DEM50xAxxP01	DLA50xA51P01 DLA50xA52P01 DLA50xA71P01 DLE50xA50P01 DLE50xF50P01	DTA50xF70P01	DEH50xA48P01 DEH50xA49P01 DEH50xA70P01 DEH70xA48P01 DEH70xA49P01 DEH70xA70P01
Without bypass valve	FMP 039 - 065 - 135 - 320 FHP 010 - 011 - 065 - 135 - 350 - 500 FMM 050 - 150 FHA 051 FHM 006 - 007 - 010 - 050 - 065 - 135 - 320 - 500 FHB 050 - 135 - 320 FHF 325 FHD 021 - 051 - 326 - 333	DVA70xP01 DVM70xP01	DEA70xA50P01 DEM70xAxxP01	DLA70xA51P01 DLA70xA52P01 DLA70xA71P01 DLE70xA50P01 DLE70xF50P01	DTA70xF70P01	DEH50xA48P01 DEH50xA49P01 DEH50xA70P01 DEH70xA48P01 DEH70xA49P01 DEH70xA70P01

DEA*50

Electrical Differential Indicator

Settings	Ordering code
5.0 bar ±10%	DE A 50 x A 50 P01
7.0 bar ±10%	DE A 70 x A 50 P01
9.5 bar ±10%	DE A 95 x A 50 P01

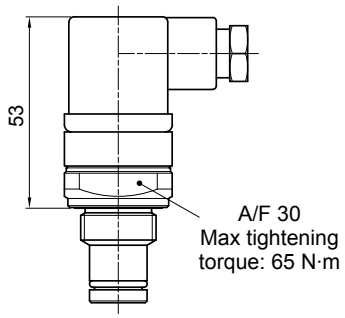

Hydraulic symbol

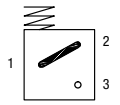

Electrical symbol

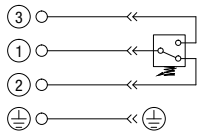

Materials
- Body: Brass
- Base: Black Nylon
- Contacts: Silver
- Seal: HNBR - FPM

Technical data
- Max working pressure: 420 bar
- Proof pressure: 630 bar
- Burst pressure: 1260 bar
- Working temperature: From -25 °C to +110 °C
- Compatibility with fluids: Mineral oils, Synthetic fluids HFA, HFB, HFC according to ISO 2943
- Degree protection: IP66 according to EN 60529 IP69K according to ISO 20653

Electrical data
- Electrical connection: EN 175301-803
- Resistive load: 0.2 A / 115 Vdc

DEH*48

Hazardous Area
Electronic Differential Indicator

Settings	Ordering code
5.0 bar ±10%	DE H 50 x A 48 P01
7.0 bar ±10%	DE H 70 x A 48 P01

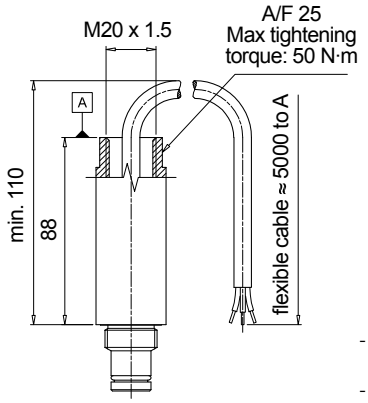

Hydraulic symbol



Electrical symbol

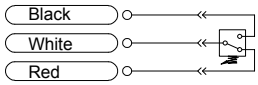

- Certification / Approvals: ATEX, IECEx, EAC TR CU, INMETRO
- Certification included as standard

Materials
- Body: AISI 316L
- Contacts: Rhodium
- Seal: FPM - MFQ

Technical data
- Max working pressure: 420 bar
- Proof pressure: 630 bar
- Burst pressure: 1260 bar
- Working temperature: From -60 °C to +125 °C
- Compatibility with fluids: Mineral oils, Synthetic fluids HFA, HFB, HFC according to ISO 2943
- Protection class: EX ia IIC T4/T6: Intrinsically safe
- Temperature class: T4 (135 °C) and T6 (85 °C)
- Degree of protection: IP 66/67/68 according to EN 60529
- Connection type: Three-core cable - fitting M20x1.5
- Contact type: SPCO/SPDT (Hermetically sealed - Volt-free contacts)

Electrical data
- Resistive Load: 830 mA / 24 Vdc - 180 mA / 110 Vac
- Electrical Ratings: Ui = 30 Vdc Ii = 250 mA Pi = 1.3 W

DEH*49

Hazardous Area
Electronic Differential Indicator

Settings	Ordering code
5.0 bar ±10%	DE H 50 x A 49 P01
7.0 bar ±10%	DE H 70 x A 49 P01

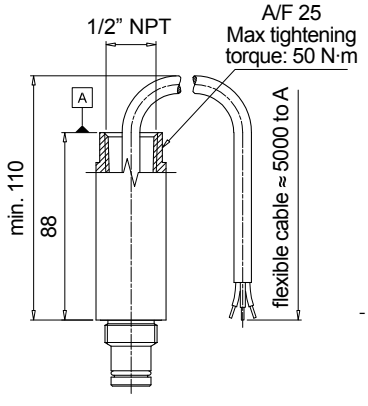

Hydraulic symbol



Electrical symbol

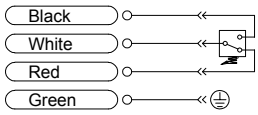

- Certification / Approvals: ATEX, IECEx, EAC TR CU, INMETRO, UL/CSA Class I Division 1 Groups A-D, UL/CSA Class II Division 1 Groups E-G
- Certification included as standard

Materials
- Body: AISI 316L
- Contacts: Rhodium
- Seal: FPM - MFQ

Technical data
- Max working pressure: 420 bar
- Proof pressure: 630 bar
- Burst pressure: 1260 bar
- Working temperature: From -60 °C to +120 °C : ATEX, IECEx, EAC TR CU, INMETRO From -60 °C to +105 °C : UL/CSA
- Compatibility with fluids: Mineral oils, Synthetic fluids HFA, HFB, HFC according to ISO 2943
- Protection class: Ex d IIC T4/T6: Flameproof
- Temperature class: T4 (135 °C) and T6 (85 °C)
- Degree of protection: IP 66/67/68 according to EN 60529
- Connection type: Four core-cable - fitting 1/2" NPT
- Contact type: SPCO/SPDT (Hermetically sealed - Volt-free contacts)

Electrical data
- Resistive Load: 830 mA / 24 Vdc - 180 mA / 110 Vac
- Max voltage 150 Vac/dc
- Power 20 W

Dimensions

DEH*70

Hazardous Area
Electronic Differential Indicator

Settings	Ordering code
5.0 bar ±10%	DE H 50 x A 70 P01
7.0 bar ±10%	DE H 70 x A 70 P01

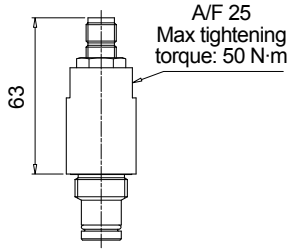

Hydraulic symbol



Electrical symbol

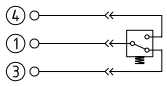

- Certification / Approvals: ATEX, IECEx, EAC TR CU, INMETRO
- Certification included as standard

Materials
- Body: AISI 316L with internal engineered resin switch
- Contacts: Rhodium
- Seal: FPM - MFQ

Technical data
- Max working pressure: 420 bar
- Proof pressure: 630 bar
- Burst pressure: 1260 bar
- Working temperature: From -60 °C to +80 °C
- Compatibility with fluids: Mineral oils, Synthetic fluids HFA, HFB, HFC according to ISO 2943
- Protection class: EX ia IIC T6: Intrinsically safe
- Temperature class: T6 (85 °C)
- Degree of protection: IP 66/67 according to EN 60529
- Connection type: IEC 61076-2-101 D (M12)
- Contact type: SPCO/SPDT (Hermetically sealed - Volt-free contacts)

Electrical data
- Resistive Load: 830 mA / 24 Vdc - 180 mA / 110 Vdc
- Electrical Ratings: Ui = 30 Vdc
  Ii = 250 mA
  Pi = 1.3 W

DEM*10

Electrical Differential Indicator

Settings	Ordering code
5.0 bar ±10%	DE M 50 x x 10 P01
7.0 bar ±10%	DE M 70 x x 10 P01
9.5 bar ±10%	DE M 95 x x 10 P01

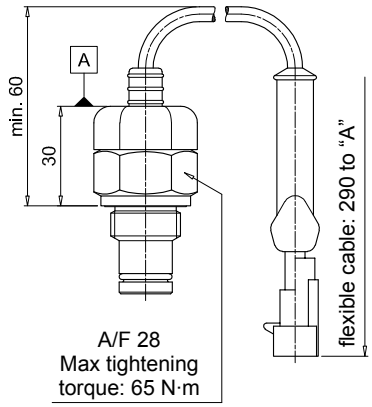

Hydraulic symbol

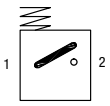

Electrical symbol

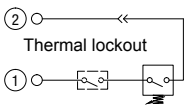

Materials
- Body: Brass
- Base: Black Nylon
- Contacts: Silver
- Seal: HNBR - FPM

Technical data
- Max working pressure: 420 bar
- Proof pressure: 630 bar
- Burst pressure: 1260 bar
- Working temperature: From -25 °C to +110 °C
- Compatibility with fluids: Mineral oils, Synthetic fluids HFA, HFB, HFC according to ISO 2943
- Degree protection: IP66 according to EN 60529

Electrical data
- Electrical connection: AMP Superseal series 1.5
- Resistive load: 0.2 A / 115 Vdc
- Switching type: Normally open contacts (NC on request)
- Thermal lockout: Normally open up to 30 °C (option "F")

DEM*20

Electrical Differential Indicator

Settings	Ordering code
5.0 bar ±10%	DE M 50 x x 20 P01
7.0 bar ±10%	DE M 70 x x 20 P01
9.5 bar ±10%	DE M 95 x x 20 P01

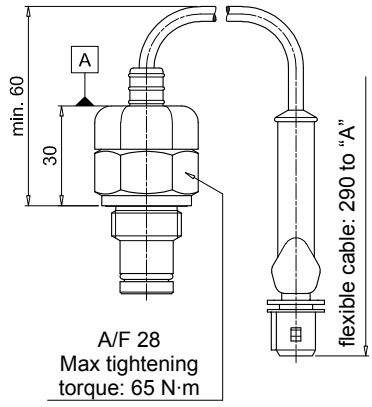

Hydraulic symbol

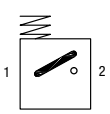

Electrical symbol

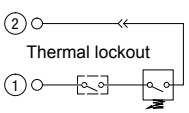

Materials
- Body: Brass
- Base: Black Nylon
- Contacts: Silver
- Seal: HNBR - FPM

Technical data
- Max working pressure: 420 bar
- Proof pressure: 630 bar
- Burst pressure: 1260 bar
- Working temperature: From -25 °C to +110 °C
- Compatibility with fluids: Mineral oils, Synthetic fluids HFA, HFB, HFC according to ISO 2943
- Degree protection: IP66 according to EN 60529

Electrical data
- Electrical connection: AMP Time junior
- Resistive load: 0.2 A / 115 Vdc
- Switching type: Normally open contacts (NC on request)
- Thermal lockout: Normally open up to 30 °C (option "F")

DEM*30

Electrical Differential Indicator

Settings	Ordering code
5.0 bar ±10%	DE M 50 x x 30 P01
7.0 bar ±10%	DE M 70 x x 30 P01
9.5 bar ±10%	DE M 95 x x 30 P01

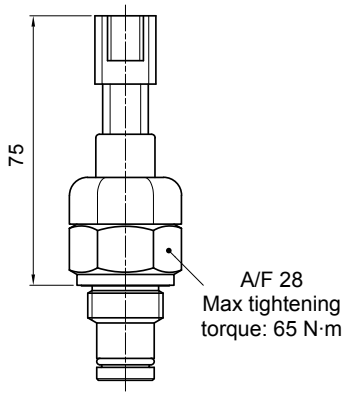

Hydraulic symbol

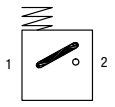

Electrical symbol

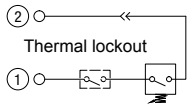

Materials
- Body: Brass
- Base: Black Nylon
- Contacts: Silver
- Seal: HNBR - FPM

Technical data
- Max working pressure: 420 bar
- Proof pressure: 630 bar
- Burst pressure: 1260 bar
- Working temperature: From -25 °C to +110 °C
- Compatibility with fluids: Mineral oils, Synthetic fluids HFA, HFB, HFC according to ISO 2943
- Degree protection: IP66 according to EN 60529

Electrical data
- Electrical connection: Deutsch DT-04-2-P
- Resistive load: 0.2 A / 115 Vdc
- Switching type: Normally open contacts (NC on request)
- Thermal lockout: Normally open up to 30 °C (option “F”)

DEM*35

Electrical Differential Indicator

Settings	Ordering code
5.0 bar ±10%	DE M 50 x x 35 P01
7.0 bar ±10%	DE M 70 x x 35 P01
9.5 bar ±10%	DE M 95 x x 35 P01

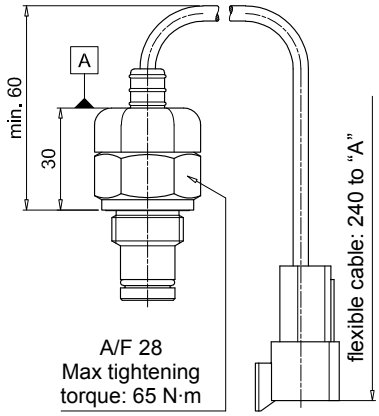

Hydraulic symbol

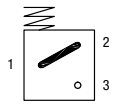

Electrical symbol

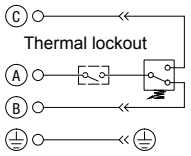

Materials
- Body: Brass
- Base: Black Nylon
- Contacts: Silver
- Seal: HNBR - FPM

Technical data
- Max working pressure: 420 bar
- Proof pressure: 630 bar
- Burst pressure: 1260 bar
- Working temperature: From -25 °C to +110 °C
- Compatibility with fluids: Mineral oils, Synthetic fluids HFA, HFB, HFC according to ISO 2943
- Degree protection: IP66 according to EN 60529

Electrical data
- Electrical connection: Deutsch DT-04-3-P
- Resistive load: 0.2 A / 115 Vdc
- Switching type: SPDT contact
- Thermal lockout: Normally open up to 30 °C (option “F”)

DLA*51 - DLA*52

Electrical/Visual Differential Indicator

Settings	Ordering code
5.0 bar ±10%	DL A 50 x A xx P01
7.0 bar ±10%	DL A 70 x A xx P01
9.5 bar ±10%	DL A 95 x A xx P01

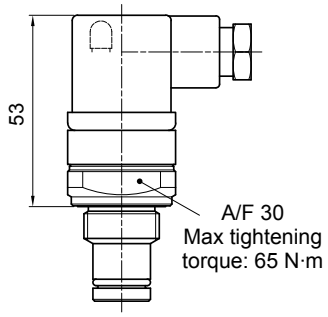

Hydraulic symbol

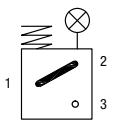

Electrical symbol

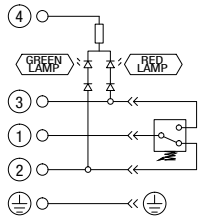

Materials
- Body: Brass
- Base: Transparent Nylon
- Contacts: Silver
- Seal: HNBR - FPM

Technical data
- Max working pressure: 420 bar
- Proof pressure: 630 bar
- Burst pressure: 1260 bar
- Working temperature: From -25 °C to +110 °C
- Compatibility with fluids: Mineral oils, Synthetic fluids HFA, HFB, HFC according to ISO 2943
- Degree protection: IP66 according to EN 60529 IP69K according to ISO 20653

Electrical data
- Electrical connection: EN 175301-803
- Type: 51 / 52
- Lamps: 24 Vdc / 110 Vdc
- Resistive load: 1 A / 24 Vdc / 1 A / 110 Vdc

Dimensions

DLA*71

Electrical/Visual Differential Indicator

Settings	Ordering code
5.0 bar ±10%	DL A 50 x A 71 P01
7.0 bar ±10%	DL A 70 x A 71 P01
9.5 bar ±10%	DL A 95 x A 71 P01

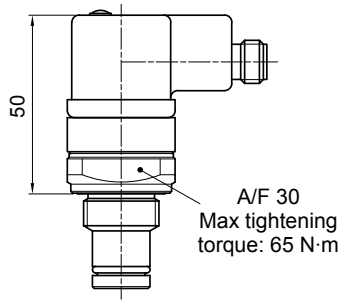

Hydraulic symbol

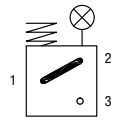

Electrical symbol

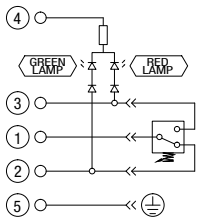

Materials
- Body: Brass
- Base: Black Nylon
- Contacts: Silver
- Seal: HNBR - FPM

Technical data
- Max working pressure: 420 bar
- Proof pressure: 630 bar
- Burst pressure: 1260 bar
- Working temperature: From -25 °C to +110 °C
- Compatibility with fluids: Mineral oils, Synthetic fluids HFA, HFB, HFC according to ISO 2943
- Degree protection: IP65 according to EN 60529 IP69K according to ISO 20653

Electrical data
- Electrical connection: IEC 61076-2-101 D (M12)
- Lamps 24 Vdc
- Resistive load: 0.4 A / 24 Vdc

DLE*A50

Electrical/Visual Differential Indicator

Settings	Ordering code
5.0 bar ±10%	DL E 50 x A 50 P01
7.0 bar ±10%	DL E 70 x A 50 P01
9.5 bar ±10%	DL E 95 x A 50 P01

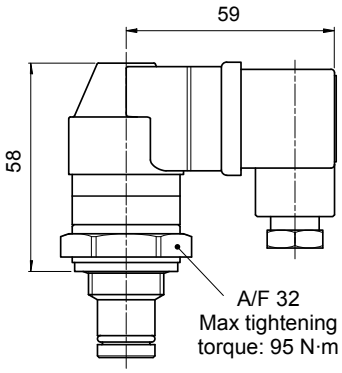

Hydraulic symbol

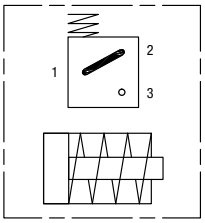

Electrical symbol

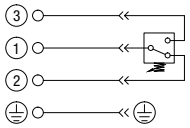

Materials
- Body: Brass
- Base: Black Nylon
- Contacts: Silver
- Seal: HNBR - FPM

Technical data
- Max working pressure: 420 bar
- Proof pressure: 630 bar
- Burst pressure: 1260 bar
- Working temperature: From -25 °C to +110 °C
- Compatibility with fluids: Mineral oils, Synthetic fluids HFA, HFB, HFC according to ISO 2943
- Degree protection: IP65 according to EN 60529

Electrical data
- Electrical connections: EN 175301-803
- Resistive load: 5 A / 250 Vac
- Available the connector with lamps

DLE*F50

Electrical/Visual Differential Indicator

Settings	Ordering code
5.0 bar ±10%	DL E 50 x F 50 P01
7.0 bar ±10%	DL E 70 x F 50 P01
9.5 bar ±10%	DL E 95 x F 50 P01

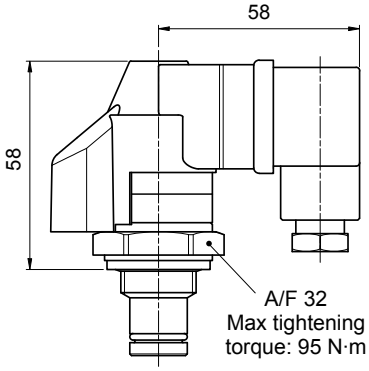

Hydraulic symbol

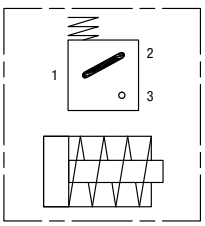

Electrical symbol

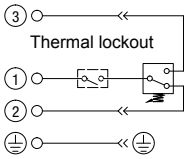

Materials
- Body: Brass
- Base: Black Nylon
- Contacts: Silver
- Seal: HNBR - FPM

Technical data
- Max working pressure: 420 bar
- Proof pressure: 630 bar
- Burst pressure: 1260 bar
- Working temperature: From -25 °C to +110 °C
- Compatibility with fluids: Mineral oils, Synthetic fluids HFA, HFB, HFC according to ISO 2943
- Degree protection: IP65 according to EN 60529

Electrical data
- Electrical connections: EN 175301-803
- Resistive load: 5 A / 250 Vac
- Thermal lockout setting: +30 °C

DTA*70

Electronic Differential Indicator

Settings	Ordering code
5.0 bar ±10%	DT A 50 x x 70 P01
7.0 bar ±10%	DT A 70 x x 70 P01
9.5 bar ±10%	DT A 95 x x 70 P01

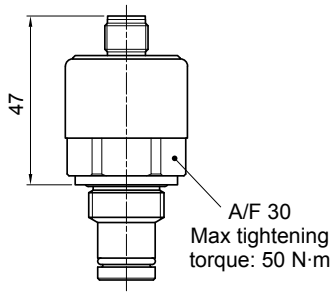

Hydraulic symbol

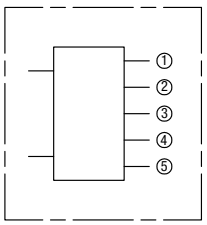

Electrical symbol

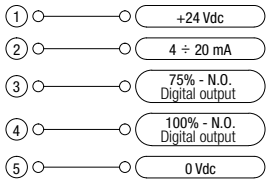

Materials
- Body: Brass
- Internal parts: Brass - Nylon
- Contacts: Silver
- Seal: HNBR - FPM

Industry 4.0 READY

Technical data
- Max working pressure: 420 bar
- Proof pressure: 630 bar
- Burst pressure: 1260 bar
- Compatibility with fluids: Mineral oils, Synthetic fluids HFA, HFB, HFC according to ISO 2943
- Degree protection: IP67 according to EN 60529

Electrical data
- Electrical connection: IEC 61076-2-101 D (M12)
- Power supply: 24 Vdc
- Analogue output: From 4 to 20 mA
- Thermal lockout: 30 °C (all output signals stalled up to 30 °C)

DVA

Visual Differential Indicator

Settings	Ordering code
5.0 bar ±10%	DV A 50 x P01
7.0 bar ±10%	DV A 70 x P01
9.5 bar ±10%	DV A 95 x P01

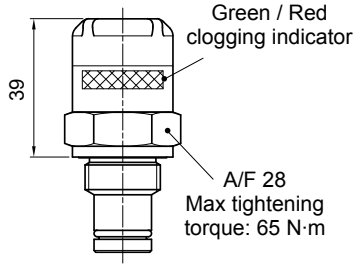

Hydraulic symbol

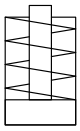

Materials
- Body: Brass
- Internal parts: Brass - Nylon
- Contacts: Silver
- Seal: HNBR - FPM

Technical data
- Reset: Automatic reset
- Max working pressure: 420 bar
- Proof pressure: 630 bar
- Burst pressure: 1260 bar
- Working temperature: From -25 °C to +110 °C
- Compatibility with fluids: Mineral oils, Synthetic fluids HFA, HFB, HFC according to ISO 2943
- Degree protection: IP65 according to EN 60529

DVM

Visual Differential Indicator

Settings	Ordering code
5.0 bar ±10%	DV M 50 x P01
7.0 bar ±10%	DV M 70 x P01
9.5 bar ±10%	DV M 95 x P01

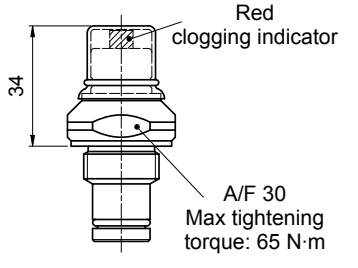

Hydraulic symbol

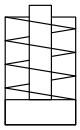

Materials
- Body: Brass
- Internal parts: Brass - Nylon
- Contacts: Silver
- Seal: HNBR - FPM

Technical data
- Reset: Manual reset
- Max working pressure: 420 bar
- Proof pressure: 630 bar
- Burst pressure: 1260 bar
- Working temperature: From -25 °C to +110 °C
- Compatibility with fluids: Mineral oils, Synthetic fluids HFA, HFB, HFC according to ISO 2943
- Degree protection: IP65 according to EN 60529

Dimensions

T2

Indicator plug

Seal	Ordering code
HNBR	T2 H
FPM	T2 V

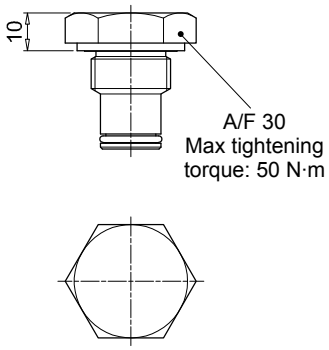

Materials

- Body: Phosphatized steel
- Seal: HNBR / FPM

DESIGNATION & ORDERING CODE - DIFFERENTIAL INDICATORS

Configuration example 1:	DE	M	50	H	F	50	P01
Configuration example 2:	DE	H	50	F	A	70	P01
Configuration example 3:	DL	E	70	V	A	71	P01
Configuration example 4:	DT	A	50	H	F	70	P01
Configuration example 5:	DV	M	95	V			P01

Series

DE	Electrical or Electronic differential indicator
DL	Electrical / Visual differential indicator
DT	Electronic differential indicator
DV	Visual differential indicator

Type	DE	DL	DT	DV
A Standard type	•	•	•	**A** With automatic reset
M With wired electrical connection	•			**M** With manual reset
E For high power supply		•		
H Hazardous area	•			

Pressure setting	DEA	DEH	DEM	DLA	DLE	DT	DV
50 5 bar	•	•	•	•	•	•	•
70 7 bar	•	•	•	•	•	•	•
95 9.5 bar	•		•	•	•	•	•

Seals	DEA	DEH	DEM	DLA	DLE	DT	DV
F MFQ		•					
H HNBR	•		•	•	•	•	•
V FPM	•	•	•	•	•	•	•

Thermostat	DEA	DEH	DEM	DLA	DLE	DT	DV
A Without	•	•	•	•	•		
F With thermostat			•		•	•	

Electrical connections	DEA	DEH	DEM	DLA	DLE	DT	DV
10 Connection AMP Superseal series 1.5			•				
20 Connection AMP Timer Junior			•				
30 Connection Deutsch DT-04-2-P			•				
35 Connection Deutsch DT-04-3-P			•				
48 Connection via three-core cable - fitting M20x1.5		•					
49 Connection via four-core cable - fitting 1/2" NPT		•					
50 Connection EN 175301-803	•				•		
51 Connection EN 175301-803, transparent base with lamps 24 Vdc				•			
52 Connection EN 175301-803, transparent base with lamps 110 Vdc				•			
70 Connection IEC 61076-2-101 D (M12)		•				•	
71 Connection IEC 61076-2-101 D (M12), black base with lamps 24 Vdc				•			

Option

P01	MP Filtri standard
Pxx	Customized

DESIGNATION & ORDERING CODE - DIFFERENTIAL INDICATOR PLUG

Configuration example	T2	H

Series

T2	Indicator plug

Seals

H	HNBR
V	FPM

Stainless steel high pressure filters are used as process filters to protect individual valves or the entire hydraulic circuit from contamination as per ISO 4406.
6 versions are available with operating pressures ranging from 320 bar up to 1000 bar.

A range of products is available to resolve all filter mounting problems, in the following configurations:
- **FZP In-line pressure filter with threaded mount**
- **FZH In-line pressure filter with threaded mount for higher pressure**
- **FZX In-line pressure filter with threaded mount up to 1000 bar**
- **FZB Manifold side mounting**
- **FZM Manifold top mounting**
- **FZD Duplex pressure filter for continuous operation requirements**

FZ stainless steel filters are specifically designed for applications in the:
- **Process engineering**
- **Water hydraulics**
- **Offshore technology**
- **Marine technology**
- **High pressure hydraulics**
- **Any application in harsh or aggressive environment**

FILTER SIZING

For the proper corrective factor Y see chapter at page 25

Stainless steel high pressure filters



FZP	page 587
FZH	597
FZX	607
FZM	615
FZB	623
FZD	631
INDICATORS	641

FZP series

Maximum working pressure up to 42 Mpa (420 bar) - Flow rate up to 160 l/min



FZP GENERAL INFORMATION

Description

Stainless steel high pressure filters

In-line
Maximum working pressure up to 42 Mpa (420 bar)
Flow rate up to 160 l/min

FZP is a range of stainless steel high pressure filter for protection of sensitive components in high pressure hydraulic systems placed in difficult environmental conditions.
They are directly connected to the lines of the system through the hydraulic fittings.

Available features:

- 1 1/4" female threaded connections, for a maximum flow rate of 160 l/min
- Fine filtration rating, to get a good cleanliness level into the system
- Bypass valve, to relieve excessive pressure drop across the filter media
- Low collapse filter element with external support "R", for filter element protection against the back pressure caused by the check valve or the reverse flow in filters provided with the bypass valve
- High collapse filter element with external support "S", for filter element protection against the back pressure caused by the check valve or the reverse flow in filters not provided with the bypass valve
- High collapse filter element "U", for use with aggressive fluids
- Visual, electrical and electronic differential clogging indicators

Common applications:

- Off-shore equipment
- Water filtration systems
- Systems with strong or corrosive environmental conditions
- Systems with corrosive fluids

Technical data

Filter housing materials

- Head: AISI 316L
- Housing: AISI 316L
- Bypass valve: AISI 316L

Seals

- Standard NBR series A (-25 °C to +110 °C)
- Optional FPM series V (-20 °C to +120 °C)
- Optional MFQ series F (-50 °C to +120 °C)

Bypass valve

Opening pressure 6 bar ±10%

Temperature

From -50 °C to +120 °C

Note

FZP filters are provided for vertical mounting

Δp element type

Fluid flow through the filter element from OUT to IN

Microfibre filter elements - series R: 20 bar.
Element series "R":
- End cap: Nylon
- Core tube: Tinned Steel
- External/Internal support: Wire mesh Epox painted
- Media/Support/Pre-filter: Microfibre/Syntetic

Microfibre filter elements - series S: 210 bar.
Element series "S":
- End cap: Tinned Steel
- Core tube: Tinned Steel
- External support: Wire mesh Epox painted
- Internal support: Wire mesh Stainless Steel
- Media/Support/Pre-filter: Microfibre/Syntetic

Stainless Steel Microfibre filter elements series U: 210 bar.
Element series "U":
- End cap: Stainless Steel
- Core tube: Stainless Steel
- External support: Stainless Steel
- Internal support: Stainless Steel
- Media/Support/Pre-filter: Microfibre/Syntetic



Weights [kg] and volumes [dm³]

Filter series	Weights [kg]					Volumes [dm³]				
	Length	1	2	3	4	Length	1	2	3	4
FZP 039		-	4.5	5.1	5.6		-	0.19	0.26	0.34
FZP 136		8.3	10.2	11.5	-		0.45	0.78	1.00	-

FILTER ASSEMBLY SIZING
Flow rates [l/min]

		Filter element design - R Series					Filter element design - S-U Series				
Filter series	Length	A03	A06	A10	A16	A25	A03	A06	A10	A16	A25
FZP 039	2	19	25	43	50	59	19	23	41	45	55
	3	34	37	53	62	74	31	34	48	52	66
	4	42	46	63	72	81	38	41	55	71	78
FZP 136	1	63	67	102	108	136	47	53	87	89	127
	2	95	100	122	123	159	81	95	113	115	138
	3	122	124	148	150	160	106	116	135	141	151

Maximum flow rate for a complete stainless steel high pressure filter with a pressure drop Δp = 1.5 bar.
The reference fluid has a kinematic viscosity of 30 mm^2/s (cSt) and a density of 0.86 kg/dm^3.
For different pressure drop or fluid viscosity we recommend to use our selection software available on www.mpfiltri.com.
You can also calculate the right size using the formulas present on the FILTER SIZING paragraph at the beginning of the full catalogue or at the beginning of the filter family brochure.
Please, contact our Sales Department for further additional information.

Hydraulic symbols

Filter series	Style S	Style B	Style T	Style D	Style V	Style Z
FZP 039	•	•	•	•	•	•
FZP 136	•	•				

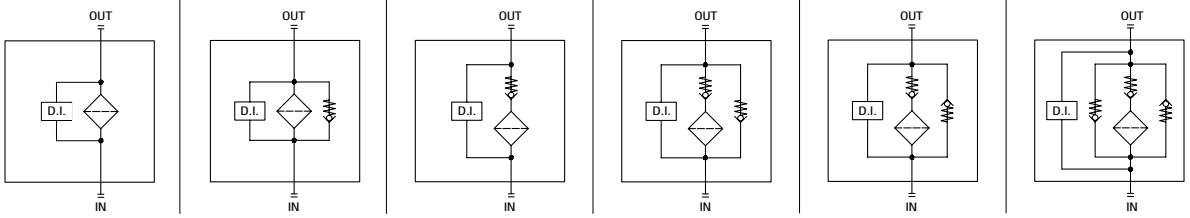

Pressure drop

Filter housings Δp pressure drop

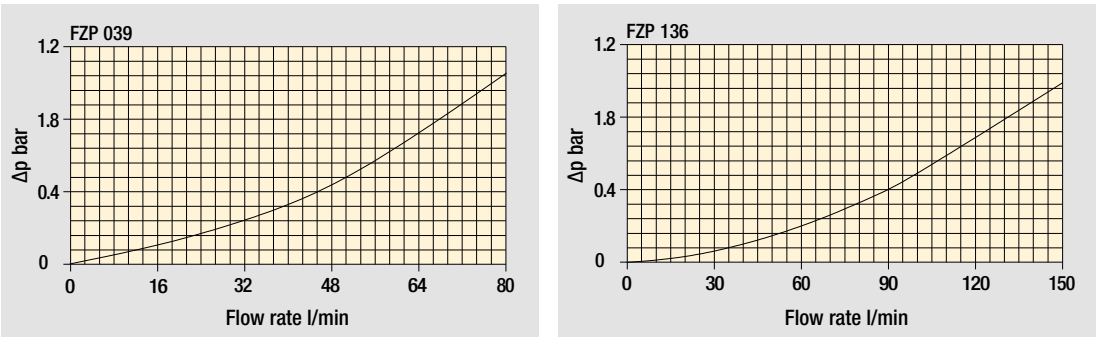

The curves are plotted using mineral oil with density of 0.86 kg/dm^3 in compliance with ISO 3968. Δp varies proportionally with density.

Designation & Ordering code

COMPLETE FILTER

Configuration example: FZP039 | 2 | B | F | B | 2 | A03 | U | P01

Series and size
FZP039

Length
2 | **3** | **4**

Valves
S Without bypass
B With bypass 6 bar
T With check valve, without bypass
D With check valve, with bypass 6 bar
V With reverse flow, without bypass
Z With reverse flow, with bypass 6 bar

Seals
A NBR
V FPM
F MFQ

Connections
A G 1/2”
B 1/2” NPT
C SAE 8 - 3/4” - 16 UNF

Connections for differential indicators
1 Without
2 With connection

Filtration rating (filter media)
A03 Inorganic microfiber 3 µm
A06 Inorganic microfiber 6 µm
A10 Inorganic microfiber 10 µm
A16 Inorganic microfiber 16 µm
A25 Inorganic microfiber 25 µm

Element Δp		Valves S	B	T	D	V	Z
R	20 bar		•		•		•
S	210 bar	•		•		•	
U	210 bar, stainless steel filter element	•	•	•	•	•	•

Execution
P01 MP Filtri standard
Pxx Customized

FILTER ELEMENT

Configuration example: HP039 | 2 | A03 | F | U | P01

Element series and size
HP039

Element length
2 | **3** | **4**

Filtration rating (filter media)
A03 Inorganic microfiber 3 µm
A06 Inorganic microfiber 6 µm
A10 Inorganic microfiber 10 µm
A16 Inorganic microfiber 16 µm
A25 Inorganic microfiber 25 µm

Seals
A NBR
V FPM
F MFQ

Element Δp		Valves S	B	T	D	V	Z
R	20 bar		•		•		•
S	210 bar	•		•		•	
U	210 bar, stainless steel filter element	•	•	•	•	•	•

Execution
P01 MP Filtri standard
Pxx Customized

ACCESSORIES

Differential indicators

		page
DEH	Hazardous area electronic differential indicator	642
DEX	Electrical differential indicator	643
DLX	Electrical / visual differential indicator	643
DVX	Visual differential indicator	643
DVY	Visual differential indicator	644

Additional features

		page
X2	Plug	644

Dimensions

FZP039	
Filter length	**H [mm]**
2	179
3	222
4	266

Connections	R
A	M6
B - C	1/4" UNC

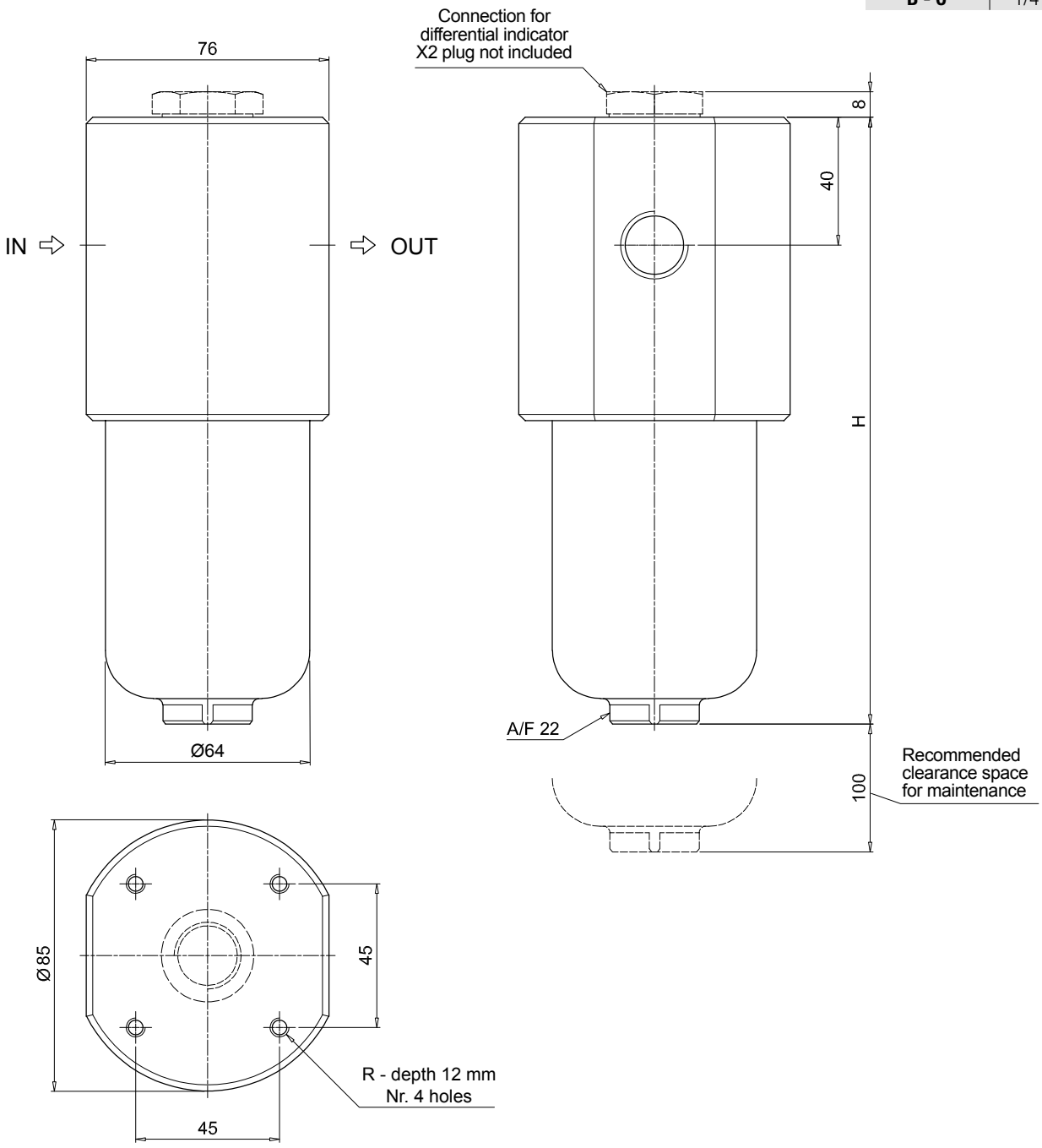

Designation & Ordering code

COMPLETE FILTER

Configuration example: FZP136 | 1 | B | A | B | 6 | A03 | R | P01

Series and size
FZP136

Length
1 | **2** | **3**

Valves
S Without bypass
B With bypass 6 bar

Seals
A NBR
V FPM
F MFQ

Connections
A G 3/4”
B 3/4” NPT
C SAE 12 - 1 1/16” - 12 UN
D G 1”
E 1” NPT
F SAE 16 - 1 5/16” - 12 UN
G G 1 1/4”
H 1 1/4” NPT
I SAE 20 - 1 5/8” - 12 UN

Connections for differential indicators
1 Without
6 With two connections on both sides

Filtration rating (filter media)
A03 Inorganic microfiber 3 µm
A06 Inorganic microfiber 6 µm
A10 Inorganic microfiber 10 µm
A16 Inorganic microfiber 16 µm
A25 Inorganic microfiber 25 µm

Element Δp		Valves S	Valves B
R	20 bar		•
S	210 bar	•	
U	210 bar, stainless steel filter element	•	•

Execution
P01 MP Filtri standard
Pxx Customized

FILTER ELEMENT

Configuration example: HP135 | 1 | A03 | A | R | P01

Element series and size
HP135

Element length
1 | **2** | **3**

Filtration rating (filter media)
A03 Inorganic microfiber 3 µm
A06 Inorganic microfiber 6 µm
A10 Inorganic microfiber 10 µm
A16 Inorganic microfiber 16 µm
A25 Inorganic microfiber 25 µm

Seals
A NBR
V FPM
F MFQ

Element Δp		Valves S	Valves B
R	20 bar		•
S	210 bar	•	
U	210 bar, stainless steel filter element	•	•

Execution
P01 MP Filtri standard
Pxx Customized

ACCESSORIES

Differential indicators

		page
DEH	Hazardous area electronic differential indicator	642
DEX	Electrical differential indicator	643
DLX	Electrical / visual differential indicator	643
DVX	Visual differential indicator	643
DVY	Visual differential indicator	644

Additional features

		page
X2	Plug	644

Dimensions

FZP136	
Filter length	**H [mm]**
1	222
2	335
3	410

Connections	R
A	M10
B - C	3/8" UNC
D	M10
E - F	3/8" UNC
G	M10
H - I	3/8" UNC

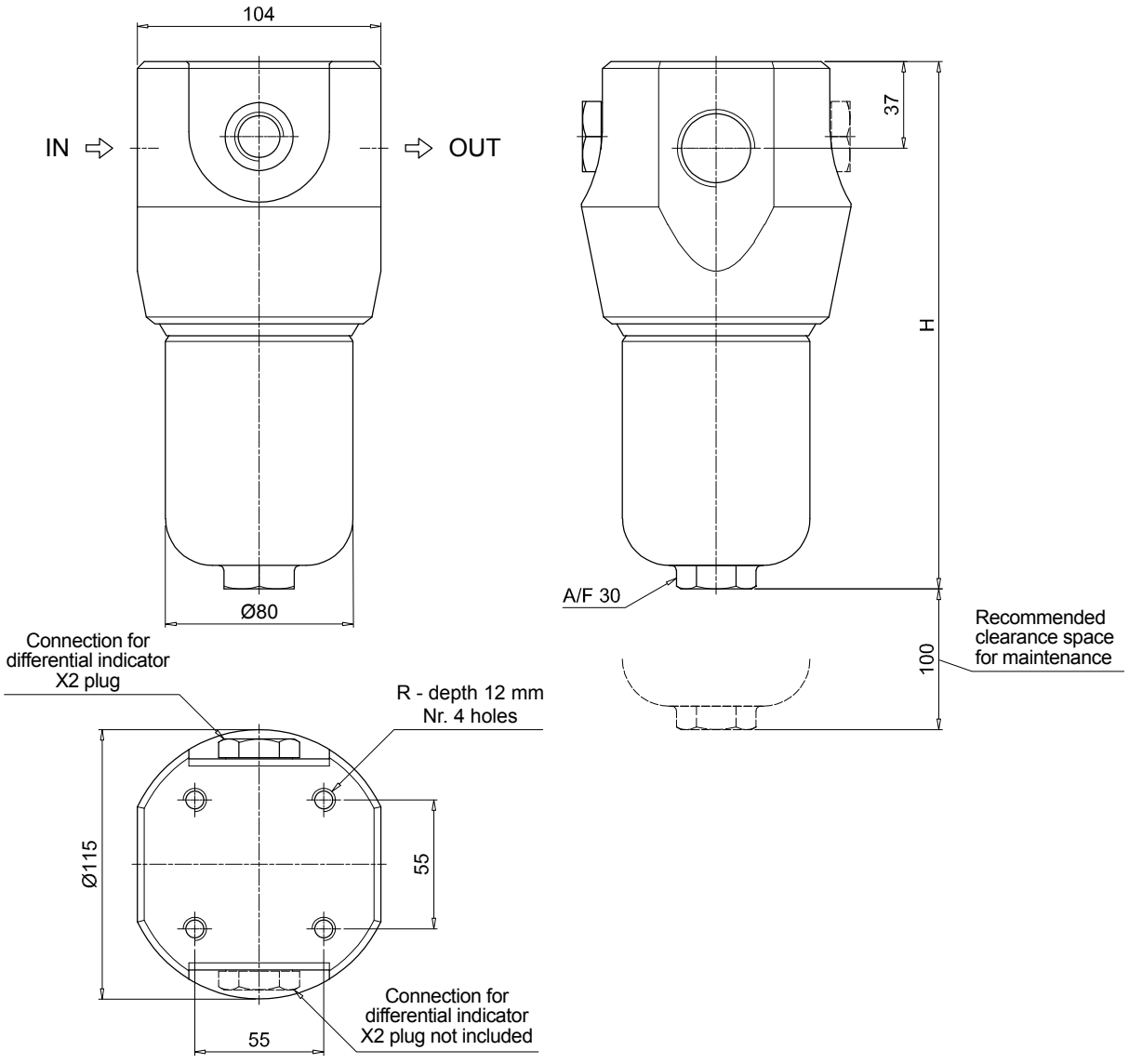

The position of the X2 plug is reversible

Order number for spare parts

FZP 039

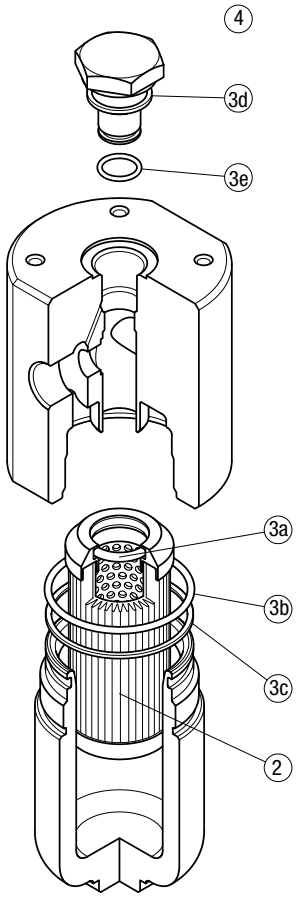

FZP 136

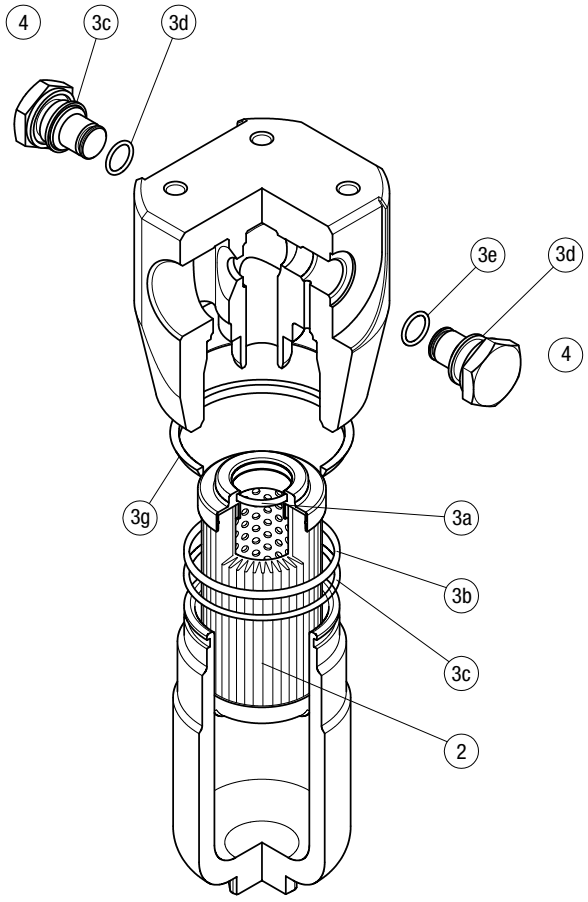

Item:	Q.ty: 1 pc. 2	Q.ty: 1 pc. 3 (3a ÷ 3g)		Q.ty: 1 pc. 4	
Filter series	**Filter element**	**Seal Kit code number NBR**	**FPM**	**Indicator connection plug NBR**	**FPM**
FZP 039	See order table	02050299	02050300	X2H	X2V
FZP 136		02050636	02050637		

FZH series

Maximum working pressure up to 70 Mpa (700 bar) - Flow rate up to 80 l/min



FZH GENERAL INFORMATION

Description

Stainless steel high pressure filters

In-line
Maximum working pressure up to 80 Mpa (700 bar)
Flow rate up to 80 l/min

FZH is a range of stainless steel high pressure filter for protection of sensitive components in high pressure hydraulic systems placed in difficult environmental conditions.
They are directly connected to the lines of the system through the hydraulic fittings.

Available features:

- 1/2" female threaded connections, for a maximum flow rate of 80 l/min
- Fine filtration rating, to get a good cleanliness level into the system
- Bypass valve, to relieve excessive pressure drop across the filter media
- Low collapse filter element "N", for use with filters provided with bypass valve
- High collapse filter element "H", for use with filters not provided with bypass valve
- Low collapse filter element with external support "R", for filter element protection against the back pressure caused by the check valve or the reverse flow in filters provided with the bypass valve
- High collapse filter element with external support "S", for filter element protection against the back pressure caused by the check valve or the reverse flow in filters not provided with the bypass valve
- High collapse filter element "U", for use with aggressive fluids
- Visual, electrical and electronic differential clogging indicators

Common applications:

- Off-shore equipment
- Water filtration systems
- Systems with strong or corrosive environmental conditions
- Systems with corrosive fluids

Technical data

Filter housing materials

- Head: AISI 316L
- Housing: AISI 316L
- Bypass valve: AISI 316L

Seals

- Standard NBR
  series A (-25 °C to +110 °C)
- Optional FPM
  series V (-20 °C to +120 °C)
- Optional MFQ
  series F (-50 °C to +120 °C)

Bypass valve

Opening pressure 6 bar ±10%

Temperature

From -50 °C to +120 °C

Note

FZH filters are provided for vertical mounting

Δp element type

Fluid flow through the filter element from OUT to IN

Microfibre filter elements - series N-R: 20 bar.
Element series "N - R":
- End cap: Nylon
- Core tube: Tinned Steel
- External/Internal support: Wire mesh Epox painted
- Media/Support/Pre-filter: Microfibre/Syntetic

Microfibre filter elements - series H-S: 210 bar.
Element series "H - S":
- End cap: Tinned Steel
- Core tube: Tinned Steel
- External support: Wire mesh Epox painted
- Internal support: Wire mesh Stainless Steel
- Media/Support/Pre-filter: Microfibre/Syntetic

Stainless Steel Microfibre filter elements series U: 210 bar.
Element series "U":
- End cap: Stainless Steel
- Core tube: Stainless Steel
- External support: Stainless Steel
- Internal support: Stainless Steel
- Media/Support/Pre-filter: Microfibre/Syntetic



Weights [kg] and volumes [dm³]

Filter series	Weights [kg]					Volumes [dm³]				
	Length	1	2	3	4	Length	1	2	3	4
FZH 010-011		2.1	2.2	2.7	3.3		0.10	0.12	0.15	0.20
FZH 039		-	7.8	8.9	10.1		-	0.19	0.26	0.34

FILTER ASSEMBLY SIZING
Flow rates [l/min]

		Filter element design - R Series					Filter element design - S-U Series				
Filter series	Length	A03	A06	A10	A16	A25	A03	A06	A10	A16	A25
FZH 010	**1**	4	6	8	9	11	4	5	6	7	9
	2	7	9	17	20	26	5	7	14	17	23
	3	11	14	25	27	32	11	14	24	27	32
	4	17	20	29	31	34	13	16	26	29	33
FZH 011	**1**	4	6	8	9	11	3	5	6	7	9
	2	7	9	17	21	28	5	7	14	17	24
	3	11	14	26	30	37	11	14	25	29	36
	4	17	21	32	36	40	12	16	28	32	38
FZH 039	**2**	19	25	43	50	59	19	23	41	45	55
	3	34	37	53	62	74	31	34	48	52	66
	4	42	46	63	72	81	38	41	55	71	78

Maximum flow rate for a complete stainless steel high pressure filter with a pressure drop Δp = 1.5 bar.
The reference fluid has a kinematic viscosity of 30 mm^2/s (cSt) and a density of 0.86 kg/dm^3.
For different pressure drop or fluid viscosity we recommend to use our selection software available on www.mpfiltri.com.
You can also calculate the right size using the formulas present on the FILTER SIZING paragraph at the beginning of the full catalogue or at the beginning of the filter family brochure.
Please, contact our Sales Department for further additional information.

Hydraulic symbols

Filter series	Style S	Style B	Style T	Style D	Style V	Style Z
FZH 010-011	•	•			•	•
FZH 039	•	•	•	•	•	•

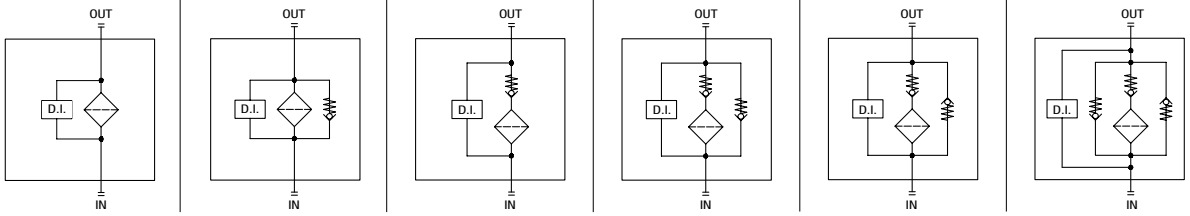

Pressure drop

Filter housings Δp pressure drop

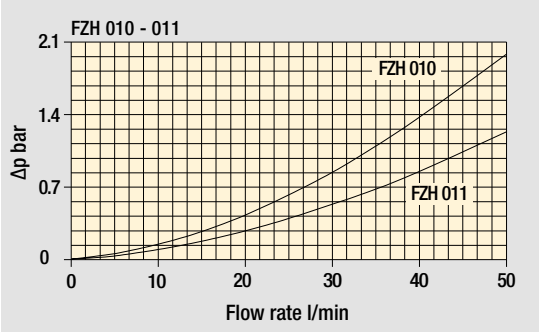

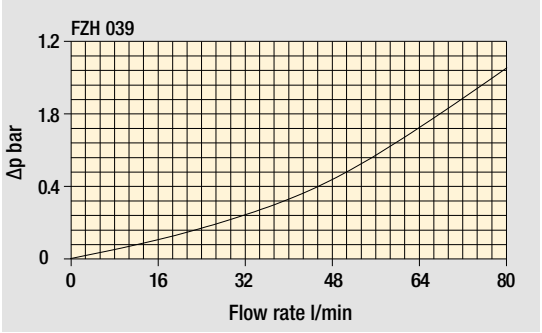

The curves are plotted using mineral oil with density of 0.86 kg/dm^3 in compliance with ISO 3968. Δp varies proportionally with density.

Designation & Ordering code

COMPLETE FILTER

Configuration example: FZH010 | 2 | B | F | B | 2 | A03 | U | P01

Series and size
FZH010 | **FZH011**

Length
1 | **2** | **3** | **4**

Valves

S	Without bypass
B	With bypass 6 bar
V	With reverse flow, without bypass
Z	With reverse flow, with bypass 6 bar

Seals

A	NBR
V	FPM
F	MFQ

Connections

A	G 1/4”
B	1/4” NPT
C	SAE 5 - 1/2” - 20 UNF
D	G 3/8”
E	3/8” NPT
F	SAE 6 - 9/16” - 18 UNF

Connections for differential indicator

1	Without
2	With connection on the top

Filtration rating (filter media)

A03	Inorganic microfiber	3 µm
A06	Inorganic microfiber	6 µm
A10	Inorganic microfiber	10 µm
A16	Inorganic microfiber	16 µm
A25	Inorganic microfiber	25 µm

Element Δp		Valves S	B	V	Z
N	20 bar		•		•
H	210 bar	•		•	
U	210 bar, stainless steel filter element	•	•	•	•

Execution

P01	MP Filtri standard
Pxx	Customized

FILTER ELEMENT

Configuration example: HP011 | 2 | A03 | F | U | P01

Element series and size
HP011

Element length
1 | **2** | **3** | **4**

Filtration rating (filter media)

A03	Inorganic microfiber	3 µm
A06	Inorganic microfiber	6 µm
A10	Inorganic microfiber	10 µm
A16	Inorganic microfiber	16 µm
A25	Inorganic microfiber	25 µm

Seals

A	NBR
V	FPM
F	MFQ

Element Δp		Valves S	B	V	Z
N	20 bar		•		•
H	210 bar	•		•	
U	210 bar, stainless steel filter element	•	•	•	•

Execution

P01	MP Filtri standard
Pxx	Customized

ACCESSORIES

Differential indicators

		page
DEH	Hazardous area electronic differential indicator	642
DEX	Electrical differential indicator	643
DLX	Electrical / visual differential indicator	643
DVX	Visual differential indicator	643
DVY	Visual differential indicator	644

Additional features

		page
X2	Plug	644

Dimensions

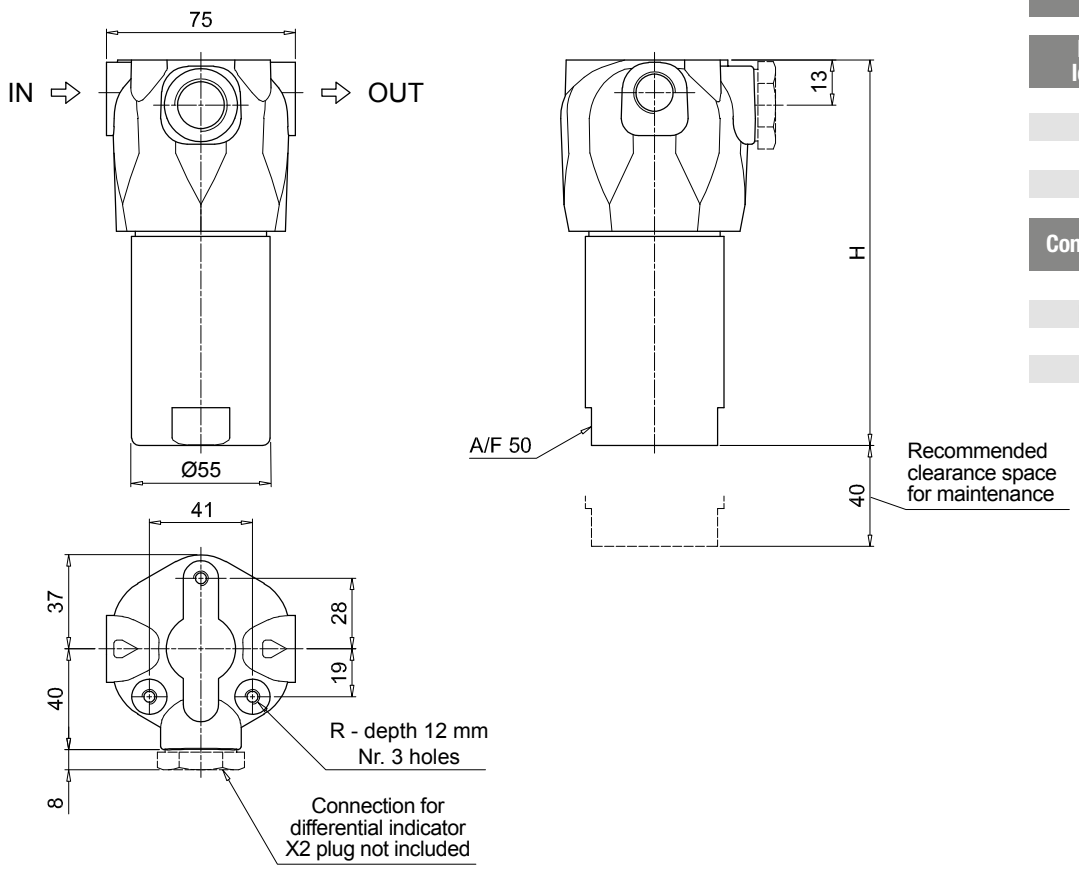

FZH010

Filter length	H [mm]
1	92
2	103
3	153
4	203

Connections	R
A	M6
B - C	1/4" UNC
D	M6
E - F	1/4" UNC

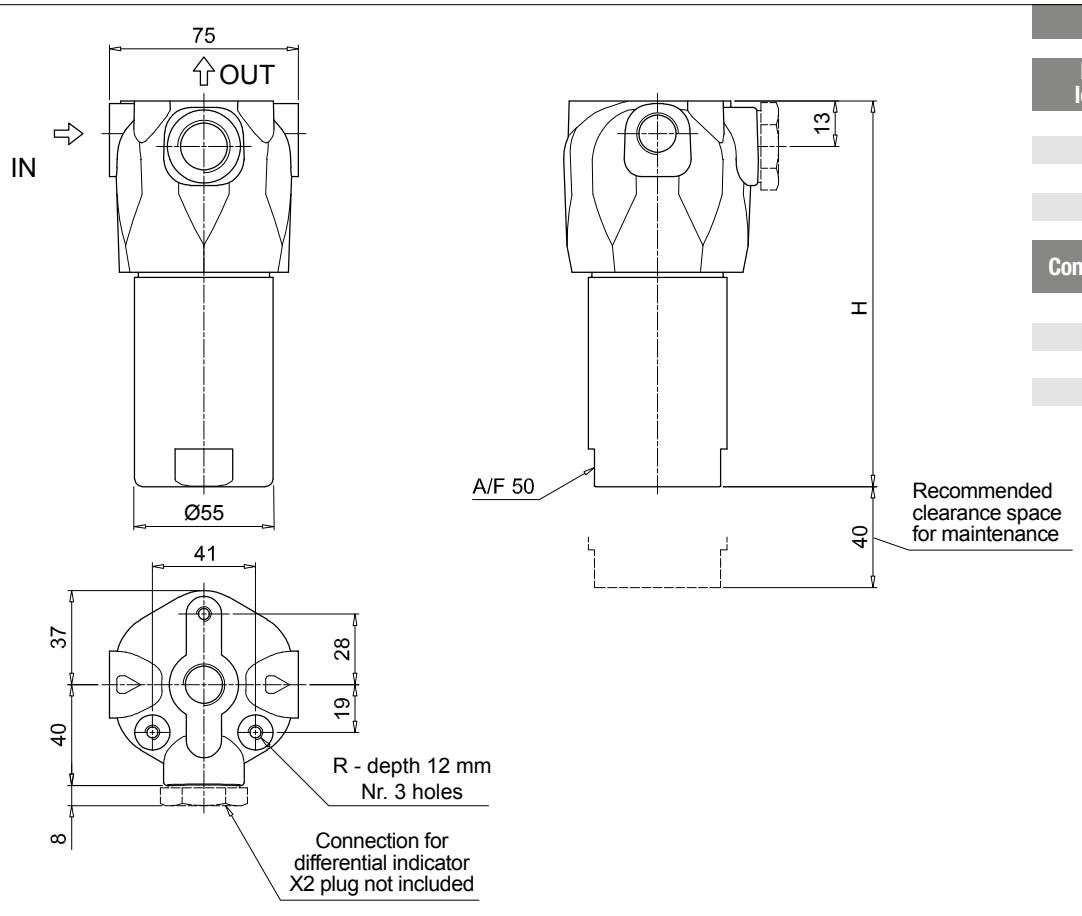

FZH011

Filter length	H [mm]
1	92
2	103
3	153
4	203

Connections	R
A	M6
B - C	1/4" UNC
D	M6
E - F	1/4" UNC

Designation & Ordering code

COMPLETE FILTER

Configuration example: FZH039 | 2 | T | A | A | 2 | A03 | S | P01

Series and size
FZH039

Length
2 | **3** | **4** |

Valves

S	Without bypass
B	With bypass 6 bar
T	With check valve, without bypass
D	With check valve, with bypass 6 bar
V	With reverse flow, without bypass
Z	With reverse flow, with bypass 6 bar

Seals

A	NBR
V	FPM
F	MFQ

Connections

A	G 1/2”
B	1/2” NPT
C	SAE 8 - 3/4” - 16 UNF

Connections for differential indicator

1	Without
2	With connection on the top

Filtration rating (filter media)

A03	Inorganic microfiber	3 µm
A06	Inorganic microfiber	6 µm
A10	Inorganic microfiber	10 µm
A16	Inorganic microfiber	16 µm
A25	Inorganic microfiber	25 µm

Element Δp		Valves S	B	T	D	V	Z
R	20 bar		•		•		•
S	210 bar	•		•		•	
U	210 bar, stainless steel filter element	•	•	•	•	•	•

Execution

P01	MP Filtri standard
Pxx	Customized

FILTER ELEMENT

Configuration example: HP039 | 2 | A03 | A | S | P01

Element series and size
HP039

Element length
2 | **3** | **4** |

Filtration rating (filter media)

A03	Inorganic microfiber	3 µm
A06	Inorganic microfiber	6 µm
A10	Inorganic microfiber	10 µm
A16	Inorganic microfiber	16 µm
A25	Inorganic microfiber	25 µm

Seals

A	NBR
V	FPM
F	MFQ

Element Δp		Valves S	B	T	D	V	Z
R	20 bar		•		•		•
S	210 bar	•		•		•	
U	210 bar, stainless steel filter element	•	•	•	•	•	•

Execution

P01	MP Filtri standard
Pxx	Customized

ACCESSORIES

Differential indicators

		page
DEH	Hazardous area electronic differential indicator	642
DEX	Electrical differential indicator	643
DLX	Electrical / visual differential indicator	643
DVX	Visual differential indicator	643
DVY	Visual differential indicator	644

Additional features

		page
X2	Plug	644

Dimensions

FZH039	
Filter length	**H [mm]**
2	200
3	243
4	287

Connections	**R**
A	M10
B - C	3/8" UNC

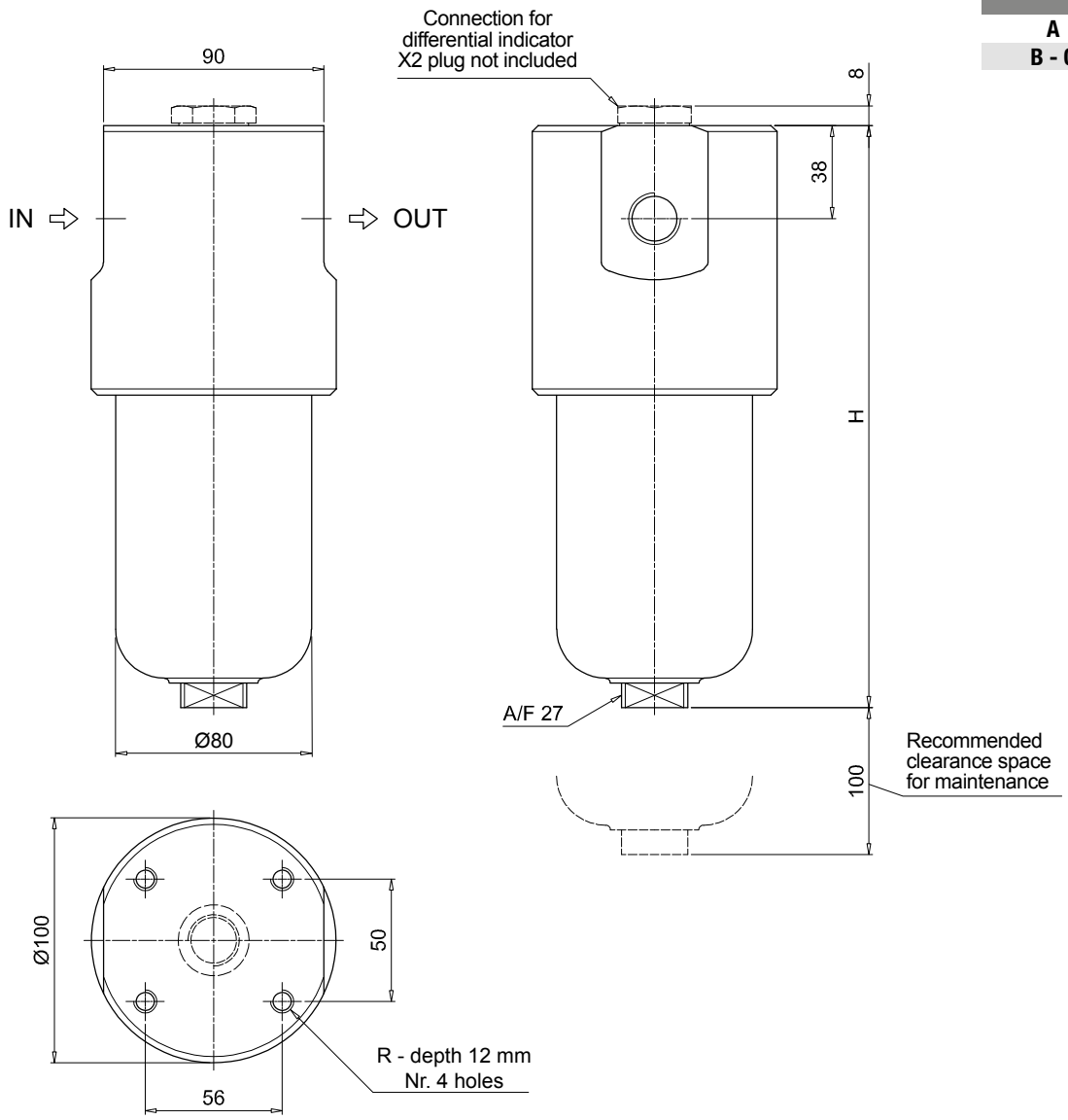

Order number for spare parts

FZH 010 - 011

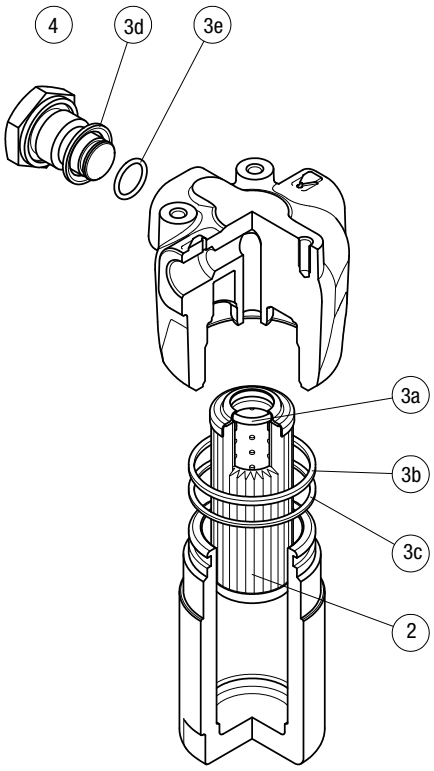

FZH 039

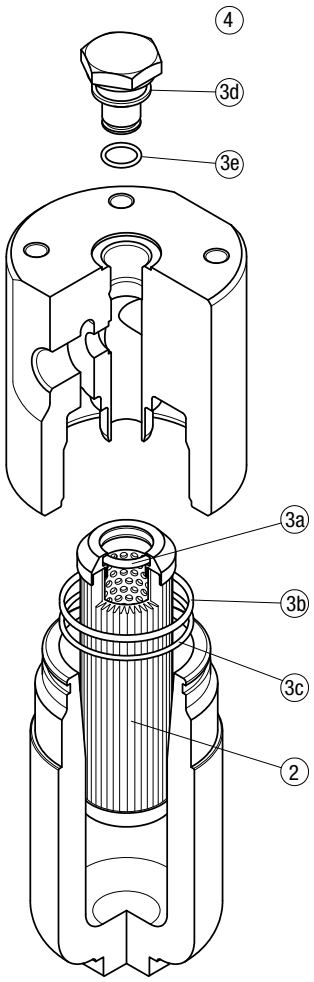

Item:	Q.ty: 1 pc. 2	Q.ty: 1 pc. 3 (3a ÷ 3e)		Q.ty: 1 pc. 4	
Filter series	Filter element	Seal Kit code number NBR	FPM	Indicator connection plug NBR	FPM
FZH 010-011	See order table	02050501	02050492	X2H	X2V
FZH 039		02050335	02050336		

FZX series

Maximum working pressure up to 100 Mpa (1000 bar) - Flow rate up to 10 l/min



FZX GENERAL INFORMATION

Description

Stainless steel high pressure filters

In-line
Maximum working pressure up to 100 Mpa (1000 bar)
Flow rate up to 10 l/min

FZX is a range of stainless steel high pressure filter for protection of sensitive components in high pressure hydraulic systems placed in difficult environmental conditions.
They are directly connected to the lines of the system through the hydraulic fittings.

Available features:

- 1/2" female threaded connections, for a maximum flow rate of 10 l/min
- Fine filtration rating, to get a good cleanliness level into the system
- High collapse filter element "H", for use with filters not provided with bypass valve
- High collapse filter element "U", for use with aggressive fluids
- Visual, electrical and electronic differential clogging indicators

Common applications:

- Off-shore equipment
- Water filtration systems
- Systems with strong or corrosive environmental conditions
- Systems with corrosive fluids

Technical data

Filter housing materials

- Head: AISI 316L
- Housing: AISI 316L
- Bypass valve: AISI 316L

Seals

- Standard NBR
  series A (-25 °C to +110 °C)
- Optional FPM
  series V (-20 °C to +120 °C)
- Optional MFQ
  series F (-50 °C to +120 °C)

Bypass valve

Opening pressure 6 bar ±10%

Temperature

From -50 °C to +120 °C

Note

FZX filters are provided for vertical mounting

Δp element type

Fluid flow through the filter element from OUT to IN

Microfibre filter elements - series H: 210 bar.
Element series "H":
- End cap: Tinned Steel
- Core tube: Tinned Steel
- External support: Wire mesh Epox painted
- Internal support: Wire mesh Stainless Steel
- Media/Support/Pre-filter: Microfibre/Syntetic

Stainless Steel Microfibre filter elements series U: 210 bar.
Element series "U":
- End cap: Stainless Steel
- Core tube: Stainless Steel
- External support: Stainless Steel
- Internal support: Stainless Steel
- Media/Support/Pre-filter: Microfibre/Syntetic



Weights [kg] and volumes [dm³]

Filter series	Weights [kg]					Volumes [dm³]				
	Length	1	2	3	4	Length	1	2	3	4
FZX 011		-	-	6.5	-		-	-	0.15	-

FILTER ASSEMBLY SIZING
Flow rates [l/min]

		Filter element design - H-U Series				
Filter series	Length	A03	A06	A10	A16	A25
FZX 011	**3**	1.57	1.63	1.73	1.74	1.77

Maximum flow rate for a complete stainless steel high pressure filter with a pressure drop Δp = 1.5 bar.
The reference fluid has a kinematic viscosity of 30 mm^2/s (cSt) and a density of 0.86 kg/dm^3.
For different pressure drop or fluid viscosity we recommend to use our selection software available on www.mpfiltri.com.
You can also calculate the right size using the formulas present on the FILTER SIZING paragraph at the beginning of the full catalogue or at the beginning of the filter family brochure.
Please, contact our Sales Department for further additional information.

Hydraulic symbols

Filter series	Style S
FZX 011	•

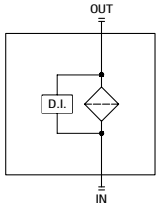

Pressure drop
Filter housings Δp pressure drop

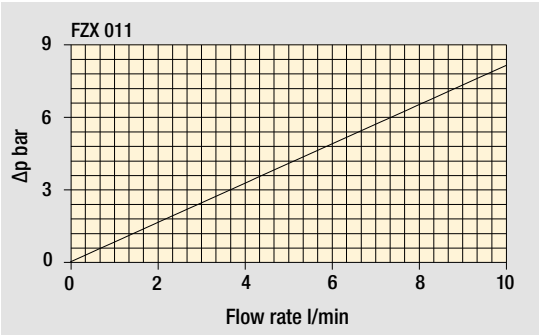

The curves are plotted using mineral oil with density of 0.86 kg/dm^3 in compliance with ISO 3968. Δp varies proportionally with density.

Designation & Ordering code

COMPLETE FILTER

Configuration example: FZX011 | 3 | S | V | B | 1 | A03 | U | P01

Series and size
FZX011

Length
3

Valves
S Without bypass

Seals
A NBR
V FPM
F MFQ

Connections

700 bar
A G 1/4”
B 1/4” NPT
G G 1/2”
H 1/2” NPT”

Autoclave 1000 bar
M 9/16” - 18 UNF
L 3/4” - 14 NPS

Connection for differential indicators
1 Without

Filtration rating (filter media)
A03 Inorganic microfiber 3 µm
A06 Inorganic microfiber 6 µm
A10 Inorganic microfiber 10 µm
A16 Inorganic microfiber 16 µm
A25 Inorganic microfiber 25 µm

Element Δp
H 210 bar
U 210 bar, stainless steel filter element

Execution
P01 MP Filtri standard
Pxx Customized

FILTER ELEMENT

Configuration example: HP011 | 3 | A03 | V | U | P01

Element series and size
HP011

Element length
3

Filtration rating (filter media)
A03 Inorganic microfiber 3 µm
A06 Inorganic microfiber 6 µm
A10 Inorganic microfiber 10 µm
A16 Inorganic microfiber 16 µm
A25 Inorganic microfiber 25 µm

Seals
A NBR
V FPM
F MFQ

Element Δp
H 210 bar
U 210 bar, stainless steel filter element

Execution
P01 MP Filtri standard
Pxx Customized

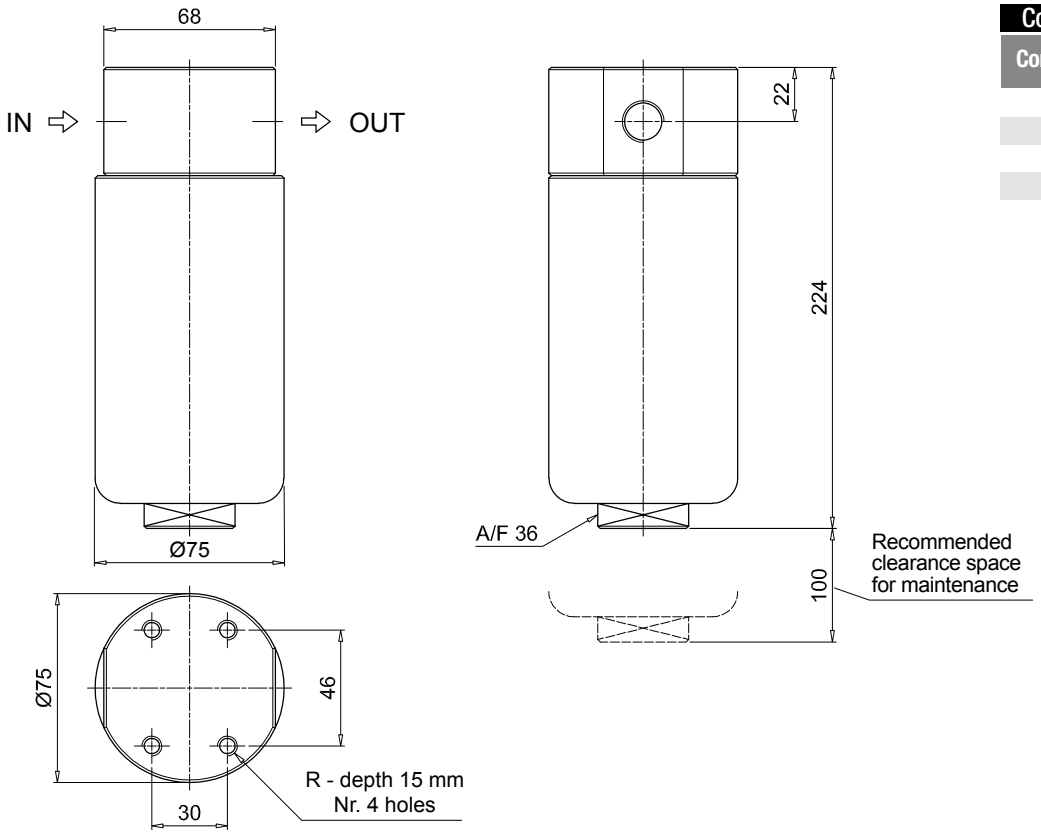

FZX011	
Connection A - B - G - H	
Connections	**R**
A	M8
B	5/16" UNC
G	M8
H	5/16" UNC

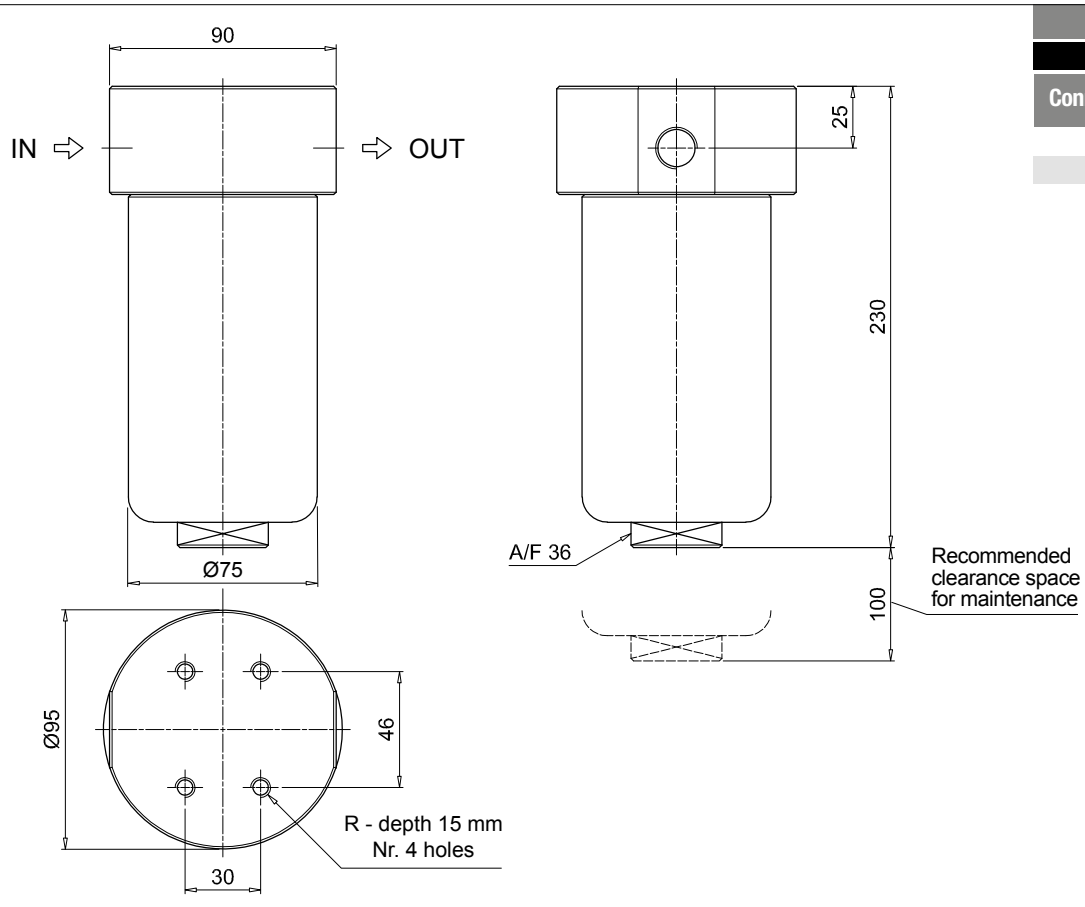

FZX011	
Connection M - L	
Connections	**R**
M	M8
L	M8

Order number for spare parts

FZX 011

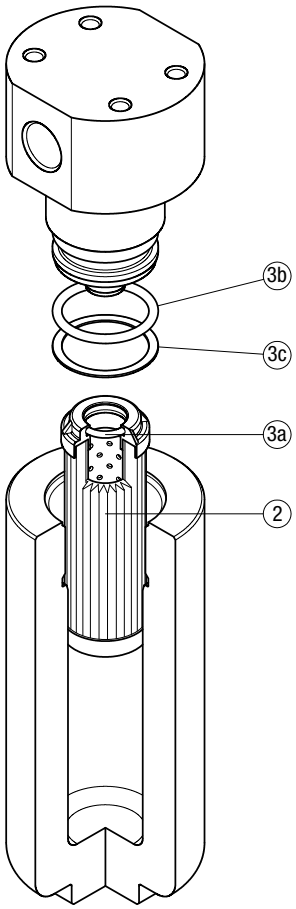

Item:	Q.ty: 1 pc. 2	Q.ty: 1 pc. 3 (3a ÷ 3c)	
Filter series	**Filter element**	**Seal Kit code number NBR**	**FPM**
FZX 011	See order table	02050643	02050644

FZM series

Maximum working pressure up to 32 Mpa (320 bar) - Flow rate up to 70 l/min



FZM GENERAL INFORMATION

Description

Stainless steel high pressure filters

Manifold
Maximum working pressure up to 32 Mpa (320 bar)
Flow rate up to 70 l/min

FZM is a range of stainless steel high pressure filter for protection of sensitive components in high pressure hydraulic systems placed in difficult environmental conditions.
They are directly connected to the top of the manifold, through the proper flanged interface.

Available features:

- Manifold connections up to Ø15 mm, for a maximum flow rate of 70 l/min
- ISO 4401 CETOP 3 and CETOP 5 interface, for direct mounting on the CETOP valves.
- Fine filtration rating, to get a good cleanliness level into the system
- Bypass valve, to relieve excessive pressure drop across the filter media
- Low collapse filter element with external support "R", for filter element protection against the back pressure caused by the check valve or the reverse flow in filters provided with the bypass valve
- High collapse filter element with external support "S", for filter element protection against the back pressure caused by the check valve or the reverse flow in filters not provided with the bypass valve
- High collapse filter element "U", for use with aggressive fluids
- Visual, electrical and electronic differential clogging indicators

Common applications:

- Off-shore equipment
- Water filtration systems
- Systems with strong or corrosive environmental conditions
- Systems with corrosive fluids

Technical data

Filter housing materials

- Head: AISI 316L
- Housing: AISI 316L
- Bypass valve: AISI 316L

Seals

- Standard NBR
  series A (-25 °C to +110 °C)
- Optional FPM
  series V (-20 °C to +120 °C)
- Optional MFQ
  series F (-50 °C to +120 °C)

Bypass valve

Opening pressure 6 bar ±10%

Temperature

From -50 °C to +120 °C

Note

FZM filters are provided for vertical mounting

Δp element type

Fluid flow through the filter element from OUT to IN

Microfibre filter elements - series R: 20 bar.
Element series "R":
- End cap: Nylon
- Core tube: Tinned Steel
- External/Internal support: Wire mesh Epox painted
- Media/Support/Pre-filter: Microfibre/Syntetic

Microfibre filter elements - series S: 210 bar.
Element series "S":
- End cap: Tinned Steel
- Core tube: Tinned Steel
- External support: Wire mesh Epox painted
- Internal support: Wire mesh Stainless Steel
- Media/Support/Pre-filter: Microfibre/Syntetic

Stainless Steel Microfibre filter elements series U: 210 bar.
Element series "U":
- End cap: Stainless Steel
- Core tube: Stainless Steel
- External support: Stainless Steel
- Internal support: Stainless Steel
- Media/Support/Pre-filter: Microfibre/Syntetic



Weights [kg] and volumes [dm³]

Filter series	Weights [kg]					Volumes [dm³]				
	Length	1	2	3	4	Length	1	2	3	4
FZM 039		-	5.0	5.6	6.1		-	0.19	0.26	0.34

FILTER ASSEMBLY SIZING
Flow rates [l/min]

		Filter element design - R Series					Filter element design - S-U Series				
Filter series	Length	A03	A06	A10	A16	A25	A03	A06	A10	A16	A25
FZM 039	**2**	19	25	41	47	54	19	23	39	43	51
	3	33	36	50	56	65	30	33	45	49	60
	4	41	44	58	64	70	37	39	51	63	68

Maximum flow rate for a complete stainless steel high pressure filter with a return drop Δp = 1.5 bar.
The reference fluid has a kinematic viscosity of 30 mm^2/s (cSt) and a density of 0.86 kg/dm^3.
For different pressure drop or fluid viscosity we recommend to use our selection software available on www.mpfiltri.com.
You can also calculate the right size using the formulas present on the FILTER SIZING paragraph at the beginning of the full catalogue or at the beginning of the filter family brochure.
Please, contact our Sales Department for further additional information.

Hydraulic symbols

Filter series	Style S	Style B
FZM 039	•	•

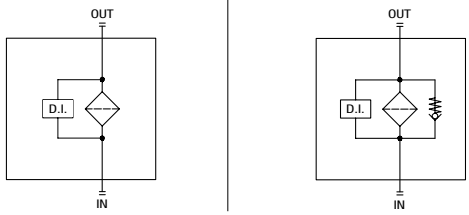

Pressure drop
Filter housings Δp pressure drop

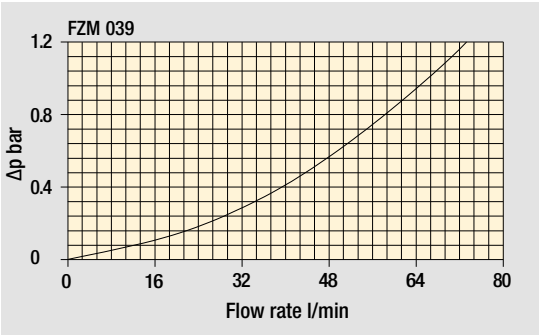

The curves are plotted using mineral oil with density of 0.86 kg/dm^3 in compliance with ISO 3968. Δp varies proportionally with density.

Designation & Ordering code

COMPLETE FILTER

Configuration example: FZM039 | 2 | S | A | M | 1 | A10 | H | P01

Series and size
FZM039

Length
2 | **3** | **4** |

Valves
S Without bypass
B With bypass 6 bar

Seals
A NBR
V FPM
F MFQ

Connections
M Manifold

Connection for differential indicator
1 Without
2 With connection

Filtration rating (filter media)
A03 Inorganic microfiber 3 µm
A06 Inorganic microfiber 6 µm
A10 Inorganic microfiber 10 µm
A16 Inorganic microfiber 16 µm
A25 Inorganic microfiber 25 µm

Element Δp	Valves S	Valves B
R 20 bar		•
S 210 bar	•	
U 210 bar, stainless steel filter element	•	•

Execution
P01 MP Filtri standard
Pxx Customized

FILTER ELEMENT

Configuration example: HP039 | 3 | A10 | A | S | P01

Element series and size
HP039

Element length
2 | **3** | **4** |

Filtration rating (filter media)
A03 Inorganic microfiber 3 µm
A06 Inorganic microfiber 6 µm
A10 Inorganic microfiber 10 µm
A16 Inorganic microfiber 16 µm
A25 Inorganic microfiber 25 µm

Seals
A NBR
V FPM
F MFQ

Element Δp
R 20 bar
S 210 bar
U 210 bar, stainless steel filter element

Execution
P01 MP Filtri standard
Pxx Customized

ACCESSORIES

Differential indicators	page
DEH Hazardous area electronic differential indicator	642
DEX Electrical differential indicator	643
DLX Electrical / visual differential indicator	643
DVX Visual differential indicator	643
DVY Visual differential indicator	644

Additional features	page
X2 Plug	644

FZM039	
Filter length	**H [mm]**
2	160
3	203
4	247

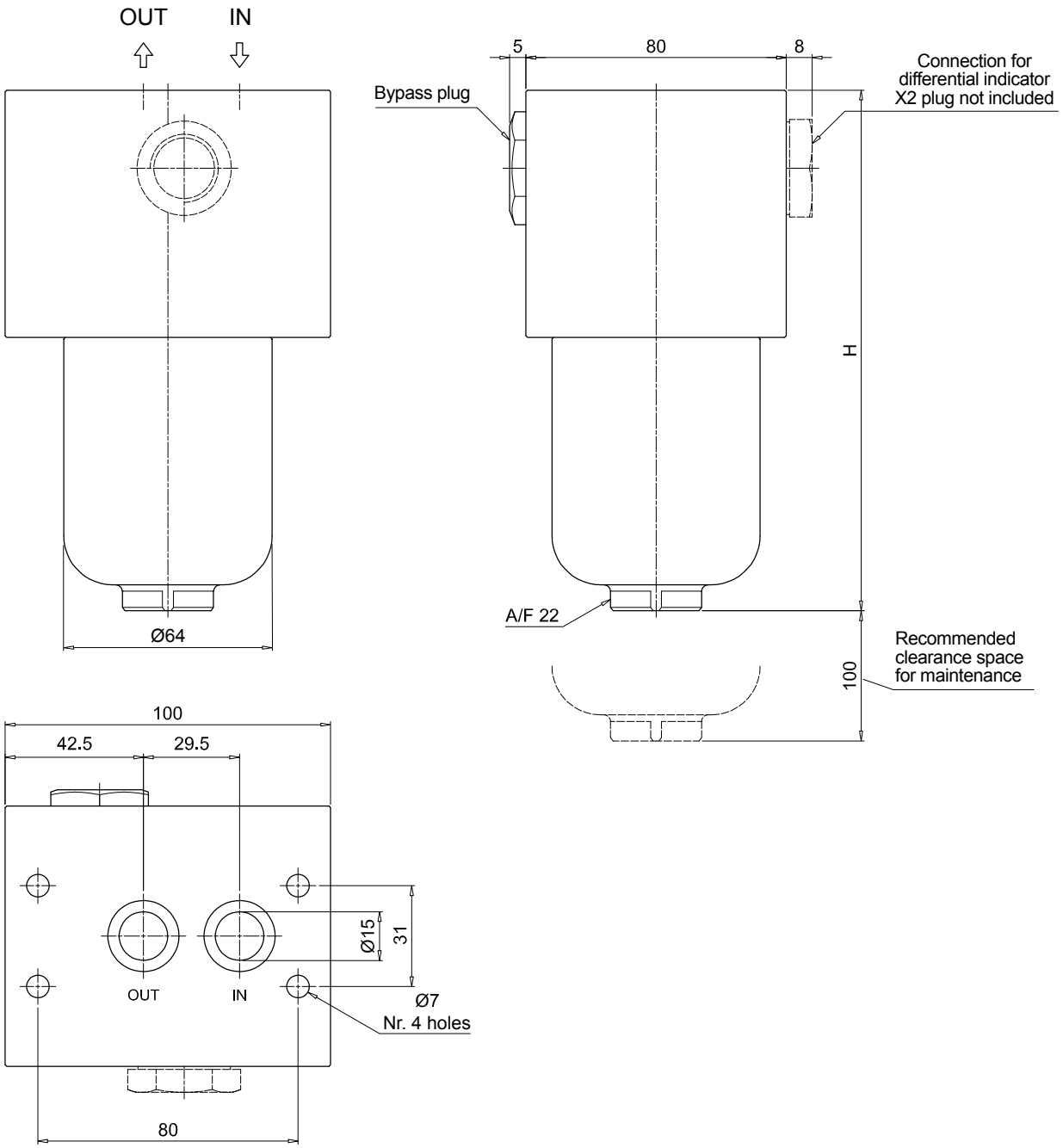

Order number for spare parts

FZM 039

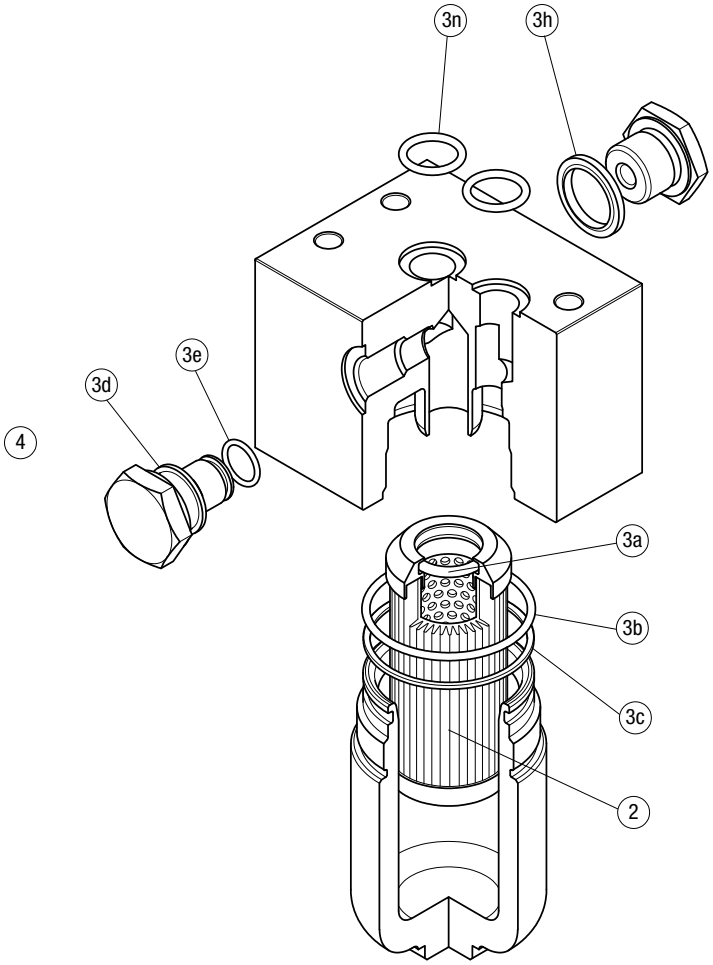

Item:	Q.ty: 1 pc. 2	Q.ty: 1 pc. 3 (3a ÷ 3n)		Q.ty: 1 pc. 4	
Filter series	**Filter element**	**Seal Kit code number NBR**	**FPM**	**Indicator connection plug NBR**	**FPM**
FZM 039	See order table	02050651	02050652	X2H	X2V

FZB series

Maximum working pressure up to 32 Mpa (320 bar) - Flow rate up to 70 l/min



FZB GENERAL INFORMATION

Description

Stainless steel high pressure filters

Manifold
Maximum working pressure up to 32 Mpa (320 bar)
Flow rate up to 70 l/min

FZB is a range of stainless steel high pressure filter for protection of sensitive components in high pressure hydraulic systems placed in difficult environmental conditions.
They are directly connected to the side of the manifold, through the proper flanged interface.

Available features:

- Manifold connections up to Ø16 mm, for a maximum flow rate of 70 l/min
- Fine filtration rating, to get a good cleanliness level into the system
- Bypass valve, to relieve excessive pressure drop across the filter media
- Low collapse filter element with external support "R", for filter element protection against the back pressure caused by the check valve or the reverse flow in filters provided with the bypass valve
- High collapse filter element with external support "S", for filter element protection against the back pressure caused by the check valve or the reverse flow in filters not provided with the bypass valve
- High collapse filter element "U", for use with aggressive fluids
- Visual, electrical and electronic differential clogging indicators

Common applications:

- Off-shore equipment
- Water filtration systems
- Systems with strong or corrosive environmental conditions
- Systems with corrosive fluids

Technical data

Filter housing materials

- Head: AISI 316L
- Housing: AISI 316L
- Bypass valve: AISI 316L

Seals

- Standard NBR
  series A (-25 °C to +110 °C)
- Optional FPM
  series V (-20 °C to +120 °C)
- Optional MFQ
  series F (-50 °C to +120 °C)

Bypass valve

Opening pressure 6 bar ±10%

Temperature

From -50 °C to +120 °C

Note

FZB filters are provided for vertical mounting

Δp element type

Fluid flow through the filter element from OUT to IN

Microfibre filter elements - series R: 20 bar.
Element series "R":
- End cap: Nylon
- Core tube: Tinned Steel
- External/Internal support: Wire mesh Epox painted
- Media/Support/Pre-filter: Microfibre/Syntetic

Microfibre filter elements - series S: 210 bar.
Element series "S":
- End cap: Tinned Steel
- Core tube: Tinned Steel
- External support: Wire mesh Epox painted
- Internal support: Wire mesh Stainless Steel
- Media/Support/Pre-filter: Microfibre/Syntetic

Stainless Steel Microfibre filter elements series U: 210 bar.
Element series "U":
- End cap: Stainless Steel
- Core tube: Stainless Steel
- External support: Stainless Steel
- Internal support: Stainless Steel
- Media/Support/Pre-filter: Microfibre/Syntetic



Weights [kg] and volumes [dm³]

Filter series	Weights [kg]					Volumes [dm³]				
	Length	1	2	3	4	Length	1	2	3	4
FZB 039		-	4.6	5.2	5.7		-	0.19	0.26	0.34

FILTER ASSEMBLY SIZING
Flow rates [l/min]

		Filter element design - R Series					Filter element design - S Series					Filter element design - U Series				
Filter series	Length	A03	A06	A10	A16	A25	A03	A06	A10	A16	A25	A03	A06	A10	A16	A25
	2	18	23	39	44	52	18	22	37	40	48	18	22	37	40	48
FZB 039	**3**	31	33	47	54	65	28	31	43	46	84	28	31	43	46	84
	4	38	41	56	63	71	34	36	48	62	68	34	36	48	62	68

Maximum flow rate for a complete stainless steel high pressure filter with a pressure drop Δp = 1.5 bar.
The reference fluid has a kinematic viscosity of 30 mm^2/s (cSt) and a density of 0.86 kg/dm^3.
For different pressure drop or fluid viscosity we recommend to use our selection software available on www.mpfiltri.com.
You can also calculate the right size using the formulas present on the FILTER SIZING paragraph at the beginning of the full catalogue or at the beginning of the filter family brochure.
Please, contact our Sales Department for further additional information.

Hydraulic symbols

Filter series	Style S	Style B	Style T	Style D
FZB 039	•	•	•	•

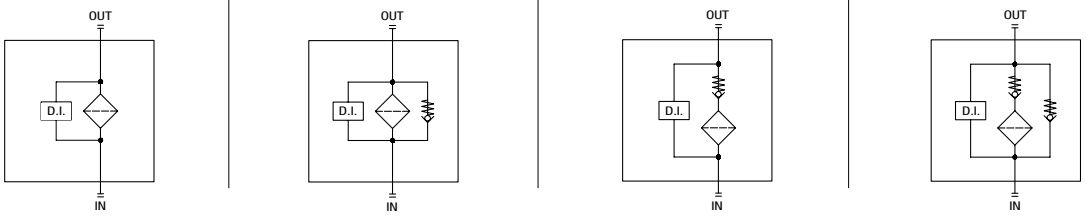

Pressure drop
Filter housings Δp pressure drop

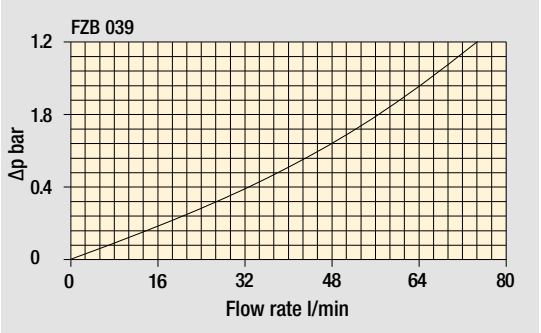

The curves are plotted using mineral oil with density of 0.86 kg/dm^3 in compliance with ISO 3968. Δp varies proportionally with density.

Designation & Ordering code

COMPLETE FILTER

Configuration example: FZB039 | 2 | T | A | F | 2 | A06 | S | P01

Series and size
FZB039

Length
2 | **3** | **4**

Valves
S	Without bypass
B	With bypass 6 bar
T	With check valve, without bypass
D	With check valve, with bypass 6 bar

Seals
A	NBR
V	FPM
F	MFQ

Connections
F	Manifold

Connections for differential indicator
1	Without
2	With connection on the top

Filtration rating (filter media)
A03	Inorganic microfiber	3 µm
A06	Inorganic microfiber	6 µm
A10	Inorganic microfiber	10 µm
A16	Inorganic microfiber	16 µm
A25	Inorganic microfiber	25 µm

Element Δp	Valves S	B	T	D
R 20 bar		•		•
S 210 bar	•		•	
U 210 bar, stainless steel filter element	•	•	•	•

Execution
P01	MP Filtri standard
Pxx	Customized

FILTER ELEMENT

Configuration example: HP039 | 2 | A06 | A | S | P01

Element series and size
HP039

Element length
2 | **3** | **4**

Filtration rating (filter media)
A03	Inorganic microfiber	3 µm
A06	Inorganic microfiber	6 µm
A10	Inorganic microfiber	10 µm
A16	Inorganic microfiber	16 µm
A25	Inorganic microfiber	25 µm

Seals
A	NBR
V	FPM
F	MFQ

Element Δp
R	20 bar
S	210 bar
U	210 bar, stainless steel filter element

Execution
P01	MP Filtri standard
Pxx	Customized

ACCESSORIES

Differential indicators

		page
DEH	Hazardous area electronic differential indicator	642
DEX	Electrical differential indicator	643
DLX	Electrical / visual differential indicator	643
DVX	Visual differential indicator	643
DVY	Visual differential indicator	644

Additional features

		page
X2	Plug	644

Dimensions

FZB039	
Filter length	**H [mm]**
2	190
3	233
4	277

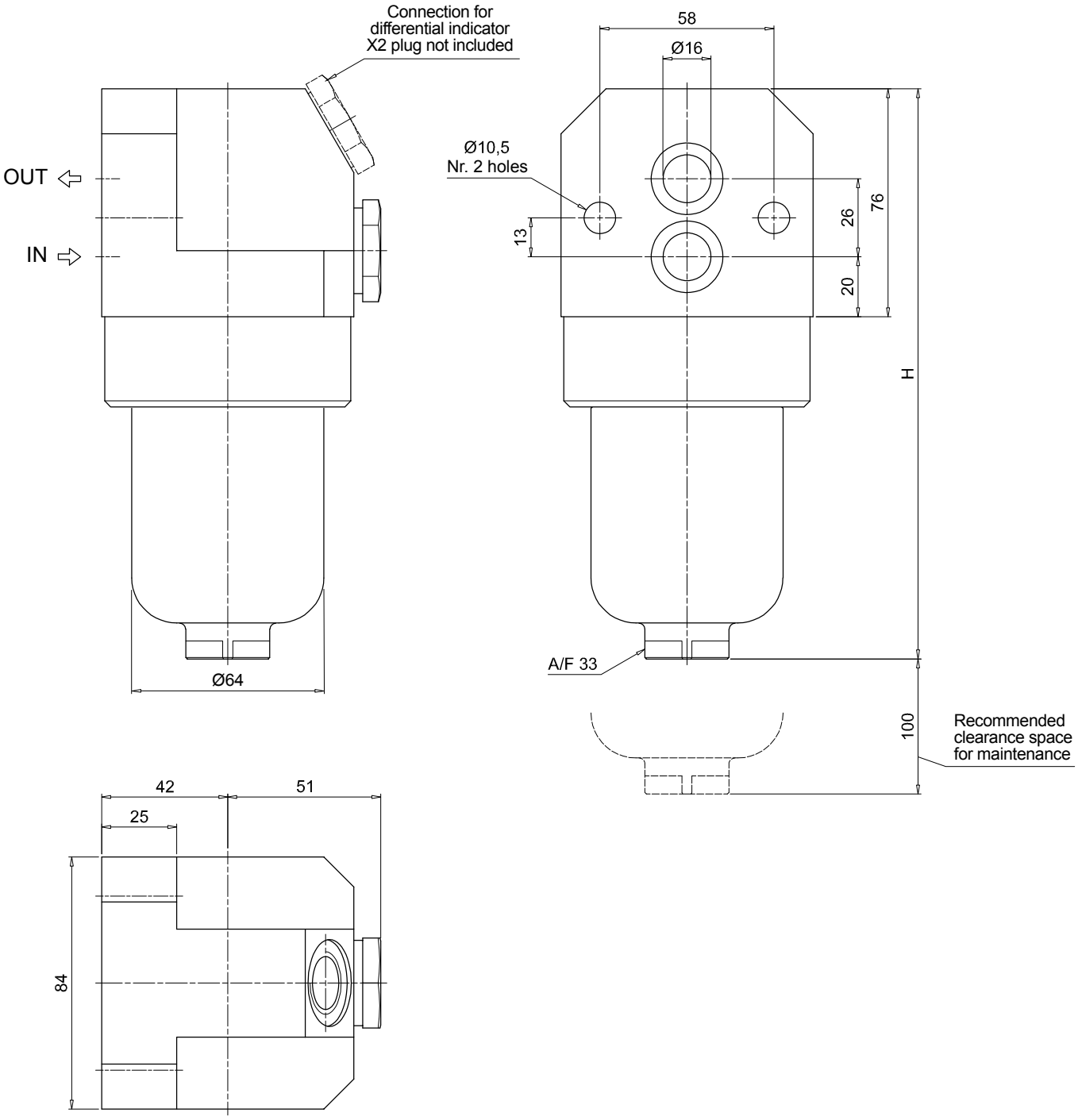

Order number for spare parts

FZB 039

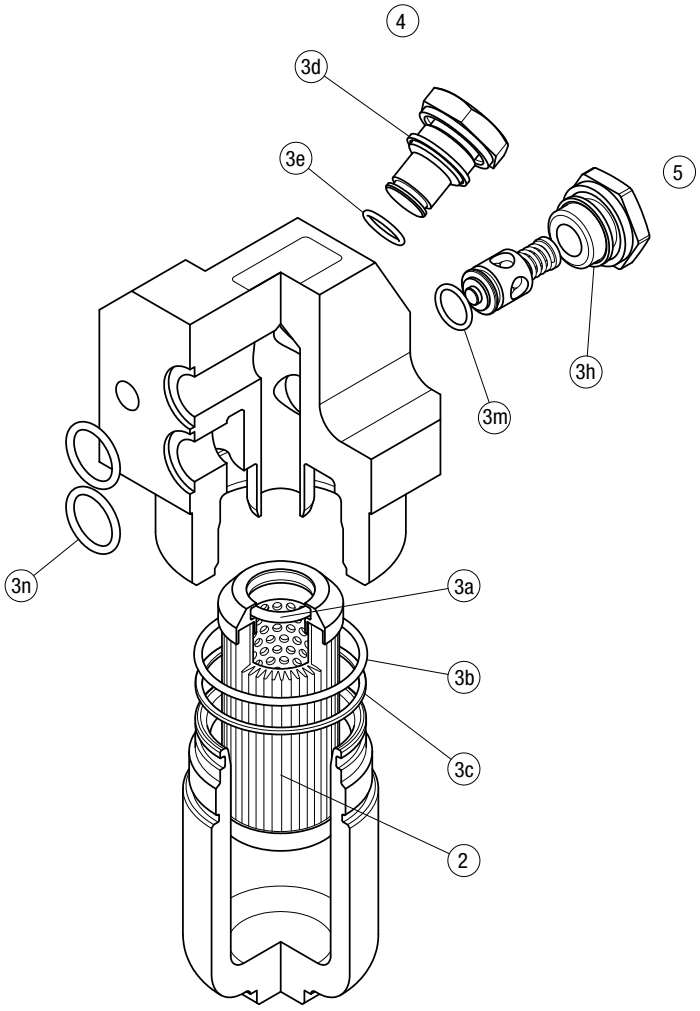

Item:	Q.ty: 1 pc. 2	Q.ty: 1 pc. 3 (3a ÷ 3n)		Q.ty: 1 pc. 4		Q.ty: 1 pc. 5	
Filter series	**Filter element**	**Seal Kit code number NBR**	**FPM**	**Indicator connection plug NBR**	**FPM**	**Bypass assembly / plug NBR**	**FPM**
FZB 039	See order table	02050647	02050648	X2H	X2V	02001286	02001295

FZD series

Maximum working pressure up to 35 Mpa (350 bar) - Flow rate up to 60 l/min



FZD GENERAL INFORMATION

Description

Stainless steel high pressure filters

Duplex
Maximum working pressure up to 35 Mpa (350 bar)
Flow rate up to 60 l/min

FZD is a range of stainless steel high pressure duplex filter with integrated changeover function to allow the filter element replacement without the system shut-down. They are directly connected to the lines of the system through the hydraulic fittings.

Available features:

- Female threaded connections up to 3/4", for a maximum flow rate of 60 l/min
- Fine filtration rating, to get a good cleanliness level into the system
- Balancing valve, available for FZD051, to equalize the housing pressure before the switch.
- Bypass valve, to relieve excessive pressure drop across the filter media
- Vent ports, to avoid air trapped into the filter going into the system
- Drain ports, to remove the fluid from the housing prior the maintenance work
- High collapse filter element "H", for use with filters not provided with bypass valve
- Low collapse filter element with external support "R", for filter element protection against the back pressure caused by the check valve or the reverse flow in filters provided with the bypass valve
- High collapse filter element with external support "S", for filter element protection against the back pressure caused by the check valve or the reverse flow in filters not provided with the bypass valve
- High collapse filter element "U", for use with aggressive fluids
- Visual, electrical and electronic differential clogging indicators

Common applications:

- System where shut-down causes high costs
- System where shut-down causes safety issues

Technical data

Filter housing materials

- Head: AISI 316L
- Housing: AISI 316L
- Bypass valve: AISI 316L

Seals

- Standard NBR series A (-25 °C to +110 °C)
- Optional FPM series V (-20 °C to +120 °C)
- Optional MFQ series F (-50 °C to +120 °C)

Bypass valve

Opening pressure 6 bar ±10%

Temperature

From -50 °C to +120 °C

Note

FZD filters are provided for vertical mounting

Δp element type

Fluid flow through the filter element from OUT to IN

Microfibre filter elements - series R: 20 bar.
Element series "R":
- End cap: Nylon
- Core tube: Tinned Steel
- External/Internal support: Wire mesh Epox painted
- Media/Support/Pre-filter: Microfibre/Syntetic

Microfibre filter elements - series H-S: 210 bar.
Element series "H - S":
- End cap: Tinned Steel
- Core tube: Tinned Steel
- External support: Wire mesh Epox painted
- Internal support: Wire mesh Stainless Steel
- Media/Support/Pre-filter: Microfibre/Syntetic

Stainless Steel Microfibre filter elements series U: 210 bar.
Element series "U":
- End cap: Stainless Steel
- Core tube: Stainless Steel
- External support: Stainless Steel
- Internal support: Stainless Steel
- Media/Support/Pre-filter: Microfibre/Syntetic



Weights [kg] and volumes [dm³]

Filter series	Weights [kg]						Volumes [dm³]					
	Length	1	2	3	4	5	Length	1	2	3	4	4
FZD 010		-	7.9	-	-	-		-	0.10	-	-	-
FZD 021		-	9.6	9.8	10.3	-		-	0.06	0.12	0.22	-
FZD 051		-	17.4	18.0	19.0	20.3		-	0.31	0.41	0.53	0.83

FILTER ASSEMBLY SIZING
Flow rates [l/min]

		Filter element design - H Series					Filter element design - U Series				
Filter series	Length	A03	A06	A10	A16	A25	A03	A06	A10	A16	A25
FZD 010	**2**	4	5	7	8	11	4	5	7	8	11
FZD 021	**2**	5	6	11	12	16	5	6	11	12	16
	3	9	11	16	18	20	9	11	16	18	20
	4	10	12	17	19	21	10	12	17	19	21

		Filter element design - R Series					Filter element design - S Series					Filter element design - U Series				
Filter series	Length	A03	A06	A10	A16	A25	A03	A06	A10	A16	A25	A03	A06	A10	A16	A25
FZD 051	**2**	39	41	51	54	59	35	37	48	51	58	35	37	48	51	58
	3	45	46	54	56	61	41	43	52	54	60	41	43	52	54	60
	4	50	52	58	58	62	47	49	56	56	61	47	49	56	56	61
	5	56	57	61	62	63	53	53	57	59	63	53	53	57	59	63

Maximum flow rate for a complete stainless steel high pressure filter with a pressure drop Δp = 1.5 bar.
The reference fluid has a kinematic viscosity of 30 mm^2/s (cSt) and a density of 0.86 kg/dm^3.
For different pressure drop or fluid viscosity we recommend to use our selection software available on www.mpfiltri.com.
You can also calculate the right size using the formulas present on the FILTER SIZING paragraph at the beginning of the full catalogue or at the beginning of the filter family brochure.
Please, contact our Sales Department for further additional information.

Hydraulic symbols

Filter series	Style S	Style B
FZD 010	•	
FZD 021	•	
FZD 051	•	•

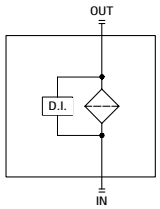

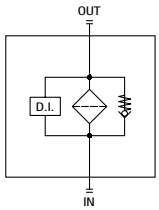

Pressure drop
Filter housings Δp pressure drop

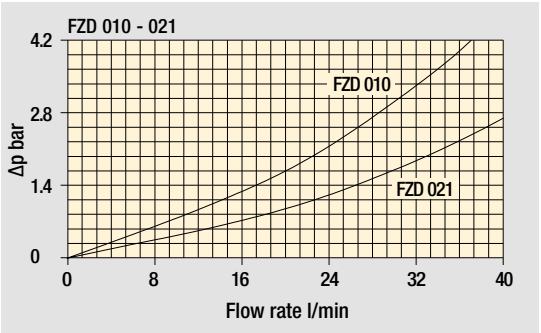

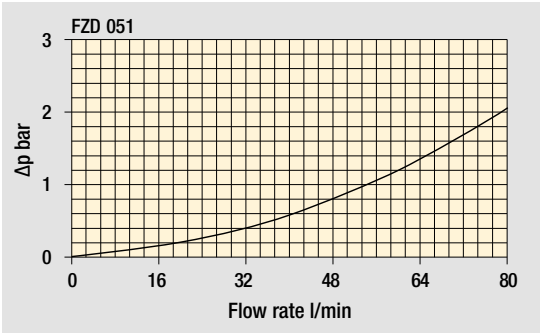

The curves are plotted using mineral oil with density of 0.86 kg/dm^3 in compliance with ISO 3968. Δp varies proportionally with density.

Designation & Ordering code

COMPLETE FILTER

Configuration example: FZD021 | 4 | S | A | G1 | A06 | H | P01

Series and size

FZD010 | **FZD021** |

Length	FZD010	FZD021
2	•	•
3		•
4		•

Valves

S	Without bypass

Seals

A	NBR
V	FPM

Connections	FZD010	FZD021
G1	G 3/8”	G 1/2”
G2	3/8” NPT	1/2” NPT
G3	-	SAE 8 - 3/4” - 16 UNF

Filtration rating (filter media)

A03	Inorganic microfiber	3 µm
A06	Inorganic microfiber	6 µm
A10	Inorganic microfiber	10 µm
A16	Inorganic microfiber	16 µm
A25	Inorganic microfiber	25 µm

Element Δp

H	210 bar
U	210 bar, stainless steel filter element

Execution

P01	MP Filtri standard
Pxx	Customized

FILTER ELEMENT

Configuration example: HP011 | 4 | A06 | A | H | P01

Element series and size

	FZD010	FZD021
HP010	•	
HP011		•

Element length	HP010	HP011
2	•	•
3		•
4		•

Filtration rating (filter media)

A03	Inorganic microfiber	3 µm
A06	Inorganic microfiber	6 µm
A10	Inorganic microfiber	10 µm
A16	Inorganic microfiber	16 µm
A25	Inorganic microfiber	25 µm

Seals

A	NBR
V	FPM

Element Δp

H	210 bar
U	210 bar, stainless steel filter element

Execution

P01	MP Filtri standard
Pxx	Customized

ACCESSORIES

Differential indicators		page
DEH	Hazardous area electronic differential indicator	642
DEX	Electrical differential indicator	643
DLX	Electrical / visual differential indicator	643
DVX	Visual differential indicator	643
DVY	Visual differential indicator	644

Additional features		page
X2	Plug	644

FZD010

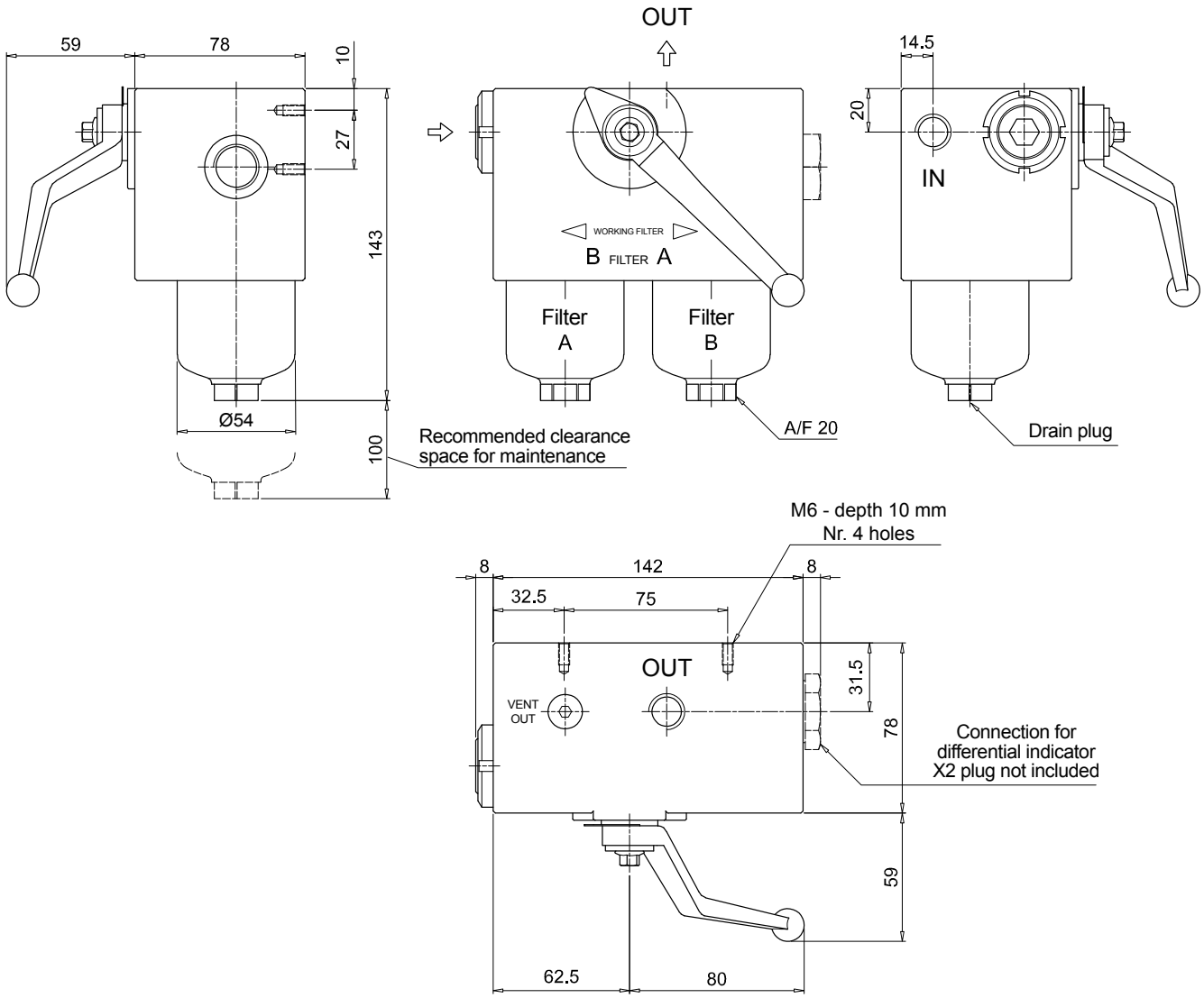
OUT
59
78
10
27
143
Ø54
100
Recommended clearance
space for maintenance
WORKING FILTER
B FILTER A
Filter
A
Filter
B
A/F 20
14.5
20
IN
Drain plug
M6 - depth 10 mm
Nr. 4 holes
8
142
8
32.5
75
OUT
VENT
OUT
31.5
78
Connection for
differential indicator
X2 plug not included
59
62.5
80

Dimensions

FZD021	
Filter length	**H [mm]**
2	172
3	222
4	272

Connections	R
G1	M6
G2 - G3	1/4" UNC

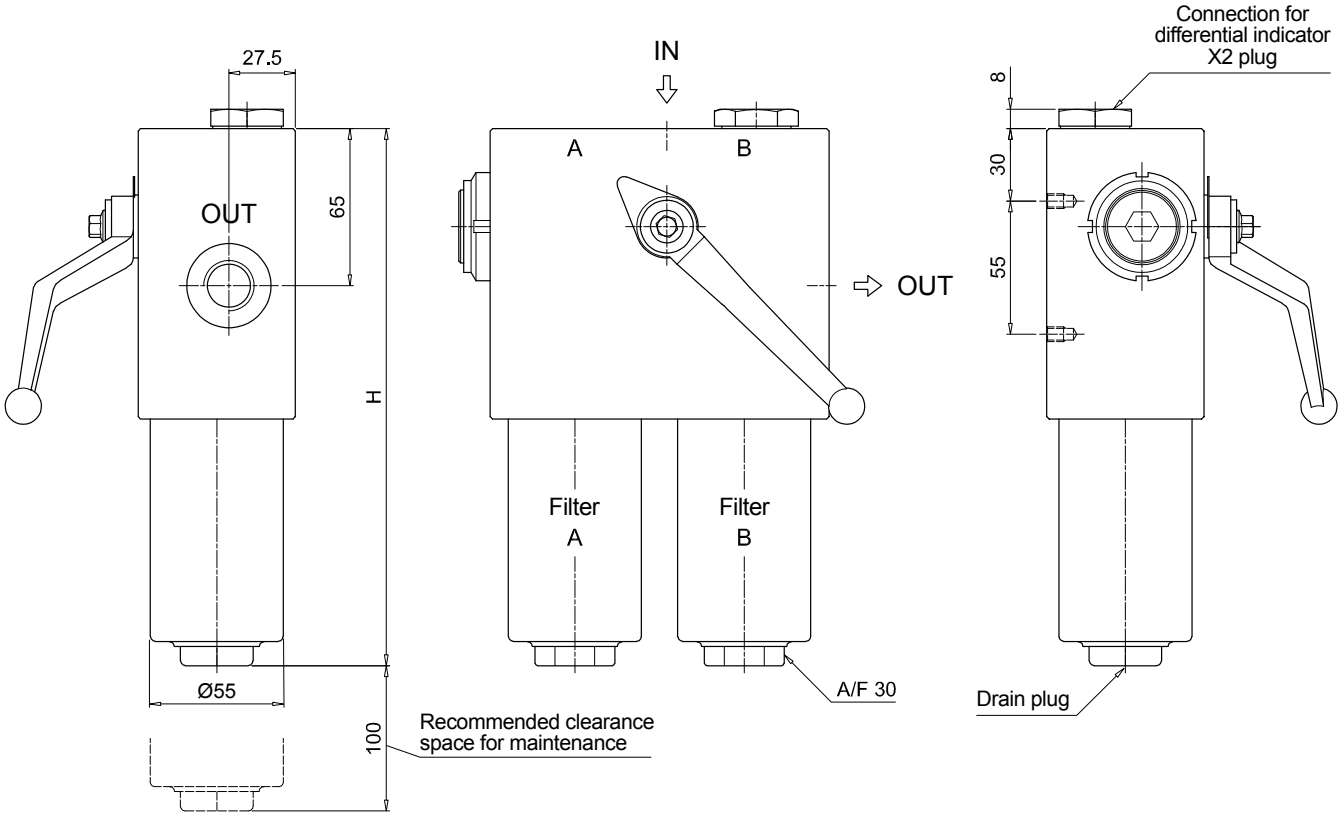

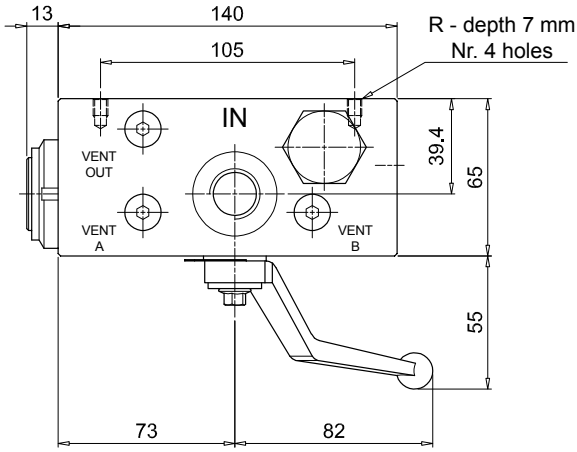

Designation & Ordering code

COMPLETE FILTER

Configuration example: FZD051 | 3 | B | A | G3 | A03 | U | P01

Series and size
FZD051

Length
2 | **3** | **4** | **5**

Valves
S Without bypass
B With bypass 6 bar

Seals
A NBR
V FPM

Connections
G1 G 3/4”
G2 3/4” NPT
G3 G 1/2”
G4 1/2” NPT
G5 SAE 8 - 3/4” - 16 UNF
G6 SAE 12 - 1 1/16” - 12 UN

Filtration rating (filter media)

A03	Inorganic microfiber	3 µm
A06	Inorganic microfiber	6 µm
A10	Inorganic microfiber	10 µm
A16	Inorganic microfiber	16 µm
A25	Inorganic microfiber	25 µm

Element Δp

		Valves S	Valves B
R	20 bar		•
S	210 bar	•	
U	210 bar, stainless steel filter element	•	•

Execution
P01 MP Filtri standard
Pxx Customized

FILTER ELEMENT

Configuration example: HP050 | 3 | A03 | A | U | P01

Element series and size
HP050

Element length
2 | **3** | **4** | **5**

Filtration rating (filter media)

A03	Inorganic microfiber	3 µm
A06	Inorganic microfiber	6 µm
A10	Inorganic microfiber	10 µm
A16	Inorganic microfiber	16 µm
A25	Inorganic microfiber	25 µm

Seals
A NBR
V FPM

Element Δp
R 20 bar
S 210 bar
U 210 bar, stainless steel filter element

Execution
P01 MP Filtri standard
Pxx Customized

ACCESSORIES

Differential indicators

		page
DEH	Hazardous area electronic differential indicator	642
DEX	Electrical differential indicator	643
DLX	Electrical / visual differential indicator	643
DVX	Visual differential indicator	643
DVY	Visual differential indicator	644

Additional features

		page
X2	Plug	644

Dimensions

FZD051	
Filter length	**H [mm]**
2	253
3	295
4	343
5	465

Connections	**R**
G1	M6
G2	1/4" UNC
G3	M6
G4-G5-G6	1/4" UNC

Valves	**L [mm]**	**L1 [mm]**	**M [mm]**
S	168	138	84
B	182.5	152.5	98.5

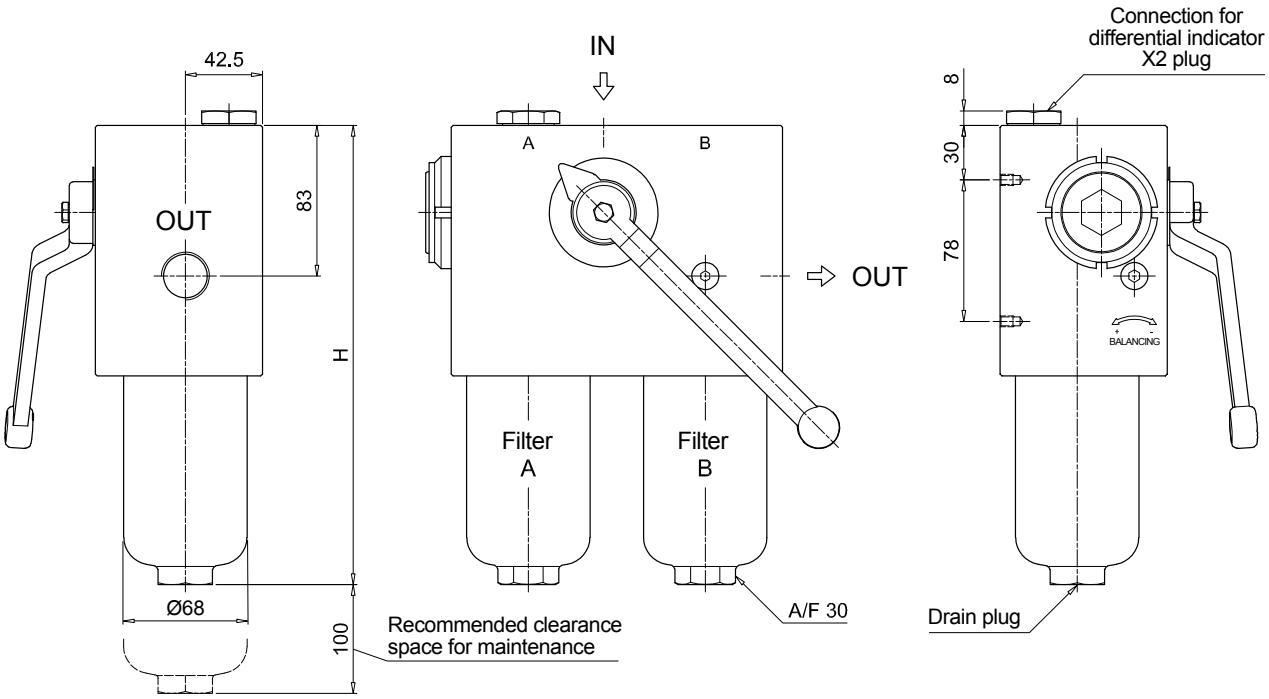

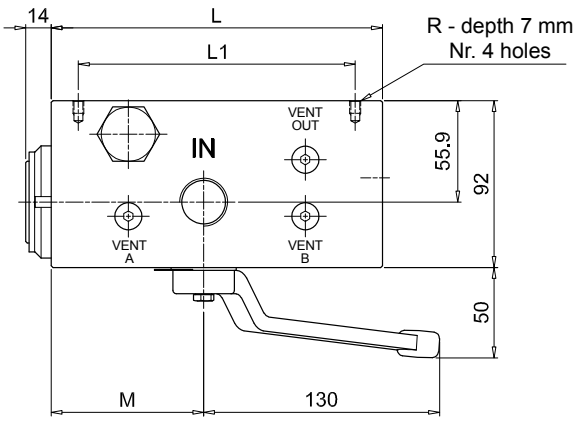

Order number for spare parts

FZD 010

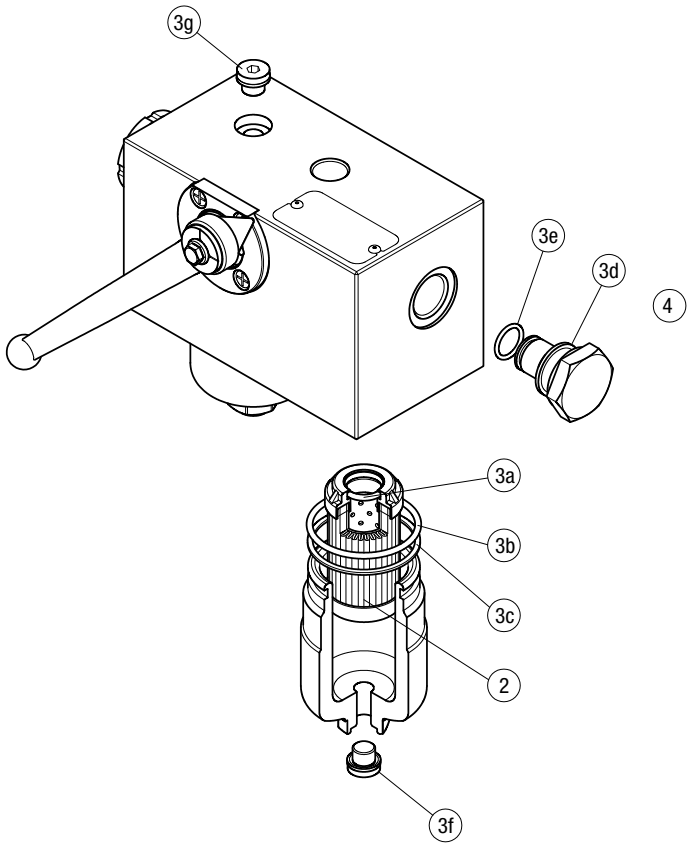

FZD 021 - FZD 051

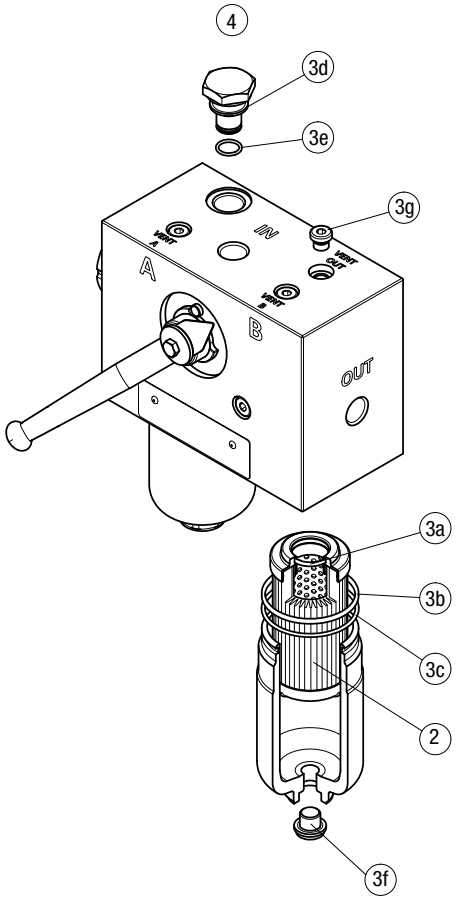

Item:	Q.ty: 1 pc. 2	Q.ty: 1 pc. 3 (3a ÷ 3g)		Q.ty: 1 pc. 4	
Filter series	Filter element	Seal Kit code number NBR	FPM	Indicator connection plug NBR	FPM
FZD 010	See order table	02050613	02050655	X2H	X2V
FZD 021		02050796	02050797		
FZD 051		02050800	02050801		

Clogging indicators

Introduction

Filter elements are efficient only if their Dirt Holding Capacity is fully exploited.
This is achieved by using filter housings equipped with clogging indicators.

These devices trip when the clogging of the filter element causes an increase in pressure drop across the filter element.

The indicator is set to alarm before the element becomes fully clogged.

MP Filtri can supply indicators of the following designs:

- Vacuum switches and gauges
- Pressure switches and gauges
- Differential pressure indicators

These type of devices can be provided with a visual, electrical or both signals.

Suitable indicator types

DIFFERENTIAL INDICATORS

Differential indicators are used on the Pressure line to check the efficiency of the filter element. They measure the pressure upstream and downstream of the filter element (differential pressure).
Standard items are produced with special connection G 1/2" size.
Also available in Stainless Steel models.

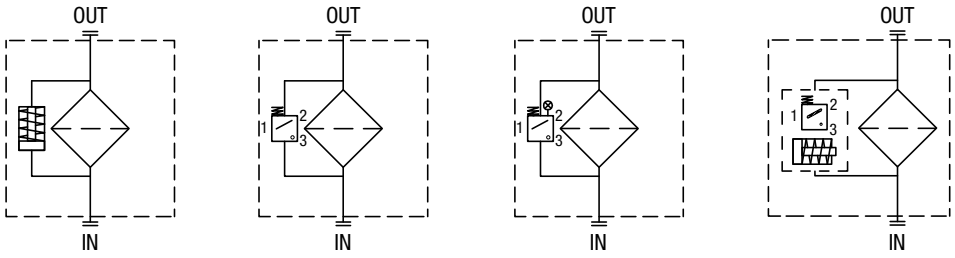

Quick reference guide

	Filter series	Visual indicator	Electrical indicator	Electrical / Visual indicator	Hazardous area electronic indicator NEW
With bypass valve	FZH 010 - 011 - 039 FZP 039 - 136 FZX 011 FZB 039 FZM 039 FZD 051	DVX50xP01 DVY50xP01	DEX50xA50P01	DLX50xA51P01 DLX50xA52P01	DEH50xA48P01 DEH50xA49P01 DEH50xA70P01 DEH70xA48P01 DEH70xA49P01 DEH70xA70P01
Without bypass valve	FZH 010 - 011 - 039 FZP 039 - 136 FZB 039 FZM 039 FZD 010 - 021 - 051	DVX70xP01 DVY70xP01	DEX70xA50P01	DLX70xA51P01 DLX70xA52P01	DEH50xA48P01 DEH50xA49P01 DEH50xA70P01 DEH70xA48P01 DEH70xA49P01 DEH70xA70P01

DEH*48

Hazardous Area
Electronic Differential Indicator

Settings	Ordering code
5.0 bar ±10%	DE H 50 x A 48 P01
7.0 bar ±10%	DE H 70 x A 48 P01

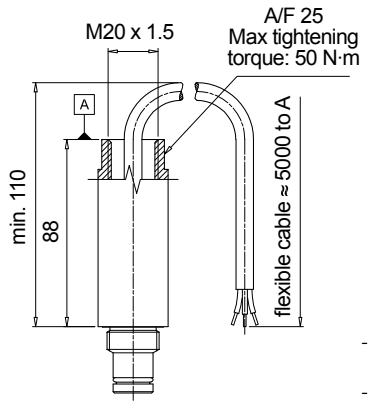

Hydraulic symbol



Electrical symbol

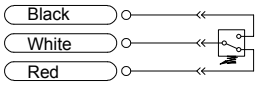

- Certification / Approvals:
  ATEX, IECEx, EAC TR CU, INMETRO
- Certification included as standard

Materials
- Body: AISI 316L
- Contacts: Rhodium
- Seal: FPM - MFQ

Technical data
- Max working pressure: 420 bar
- Proof pressure: 630 bar
- Burst pressure: 1260 bar
- Working temperature: From -60 °C to +125 °C
- Compatibility with fluids: Mineral oils, Synthetic fluids HFA, HFB, HFC according to ISO 2943
- Protection class: EX ia IIC T4/T6: Intrinsically safe
- Temperature class: T4 (135 °C) and T6 (85 °C)
- Degree of protection: IP 66/67/68 according to EN 60529
- Connection type: Three-core cable - fitting M20x1.5
- Contact type: SPCO/SPDT (Hermetically sealed - Volt-free contacts)

Electrical data
- Resistive Load: 830 mA / 24 Vdc - 180 mA / 110 Vac
- Electrical Ratings: Ui = 30 Vdc
  Ii = 250 mA
  Pi = 1.3 W

DEH*49

Hazardous Area
Electronic Differential Indicator

Settings	Ordering code
5.0 bar ±10%	DE H 50 x A 49 P01
7.0 bar ±10%	DE H 70 x A 49 P01

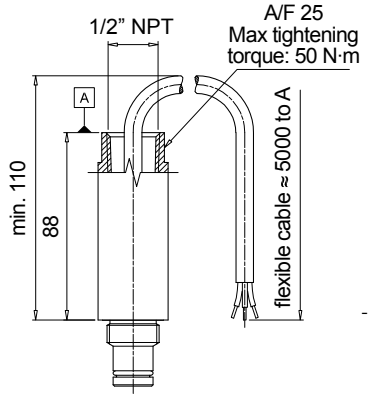

Hydraulic symbol



Electrical symbol

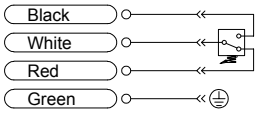

- Certification / Approvals:
  ATEX, IECEx, EAC TR CU, INMETRO,
  UL/CSA Class I Division 1 Groups A-D,
  UL/CSA Class II Division 1 Groups E-G
- Certification included as standard

Materials
- Body: AISI 316L
- Contacts: Rhodium
- Seal: FPM - MFQ

Technical data
- Max working pressure: 420 bar
- Proof pressure: 630 bar
- Burst pressure: 1260 bar
- Working temperature: From -60 °C to +120 °C : ATEX, IECEx, EAC TR CU, INMETRO
  From -60 °C to +105 °C : UL/CSA
- Compatibility with fluids: Mineral oils, Synthetic fluids HFA, HFB, HFC according to ISO 2943
- Protection class: Ex d IIC T4/T6: Flameproof
- Temperature class: T4 (135 °C) and T6 (85 °C)
- Degree of protection: IP 66/67/68 according to EN 60529
- Connection type: Four core-cable - fitting 1/2" NPT
- Contact type: SPCO/SPDT (Hermetically sealed - Volt-free contacts)

Electrical data
- Resistive Load: 830 mA / 24 Vdc - 180 mA / 110 Vac
- Max voltage 150 Vac/dc
- Power 20 W

DEH*70

Hazardous Area
Electronic Differential Indicator

Settings	Ordering code
5.0 bar ±10%	DE H 50 x A 70 P01
7.0 bar ±10%	DE H 70 x A 70 P01

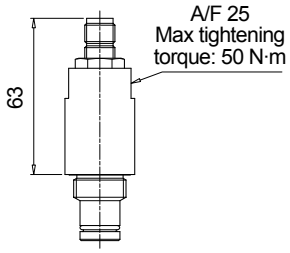

Hydraulic symbol



Electrical symbol

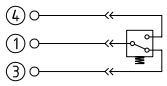

- Certification / Approvals:
  ATEX, IECEx, EAC TR CU, INMETRO
- Certification included as standard

Materials
- Body: AISI 316L with internal engineered resin switch
- Contacts: Rhodium
- Seal: FPM - MFQ

Technical data
- Max working pressure: 420 bar
- Proof pressure: 630 bar
- Burst pressure: 1260 bar
- Working temperature: From -60 °C to +80 °C
- Compatibility with fluids: Mineral oils, Synthetic fluids HFA, HFB, HFC according to ISO 2943
- Protection class: EX ia IIC T6: Intrinsically safe
- Temperature class: T6 (85 °C)
- Degree of protection: IP 66/67 according to EN 60529
- Connection type: IEC 61076-2-101 D (M12)
- Contact type: SPCO/SPDT (Hermetically sealed - Volt-free contacts)

Electrical data
- Resistive Load: 830 mA / 24 Vdc - 180 mA / 110 Vdc
- Electrical Ratings: Ui = 30 Vdc
  Ii = 250 mA
  Pi = 1.3 W

DEX*50

Electrical Differential Indicator

Settings	Ordering code
5.0 bar ±10%	DE X 50 x A 50 P01
7.0 bar ±10%	DE X 70 x A 50 P01
9.5 bar ±10%	DE X 95 x A 50 P01

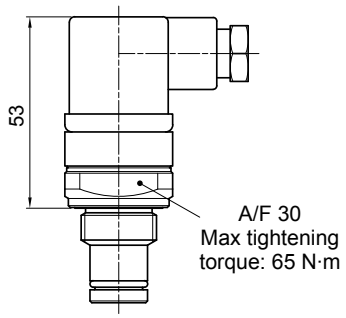

Hydraulic symbol

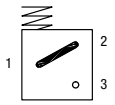

Electrical symbol

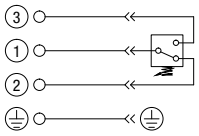

Materials
- Body: AISI 316L
- Base: Black Nylon
- Contacts: Silver
- Seal: HNBR - MFQ

Technical data
- Max working pressure: 420 bar
- Proof pressure: 630 bar
- Burst pressure: 1260 bar
- Working temperature: From -25 °C to +110 °C
- Compatibility with fluids: Mineral oils, Synthetic fluids HFA, HFB, HFC according to ISO 2943
- Degree protection: IP66 according to EN 60529 IP69K according to ISO 20653

Electrical data
- Electrical connection: EN 175301-803
- Resistive load: 0.2 A / 115 Vdc

DLX*51 - DLX*52

Electrical/Visual Differential Indicator

Settings	Ordering code
5.0 bar ±10%	DL X 50 x A x x P01
7.0 bar ±10%	DL X 70 x A x x P01
9.5 bar ±10%	DL X 95 x A x x P01

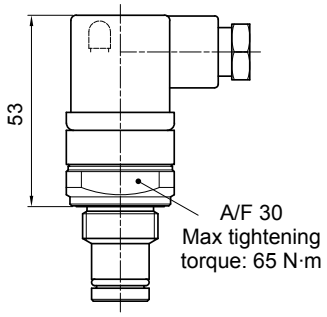

Hydraulic symbol

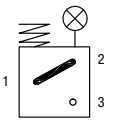

Electrical symbol

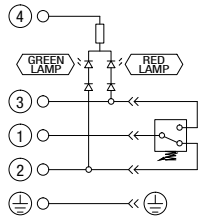

Materials
- Body: AISI 316L
- Base: Transparent Nylon
- Contacts: Silver
- Seal: HNBR - MFQ

Technical data
- Max working pressure: 420 bar
- Proof pressure: 630 bar
- Burst pressure: 1260 bar
- Working temperature: From -25 °C to +110 °C
- Compatibility with fluids: Mineral oils, Synthetic fluids HFA, HFB, HFC according to ISO 2943
- Degree protection: IP66 according to EN 60529 IP69K according to ISO 20653

Electrical data

- Electrical connection:	EN 175301-803	
- Type	51	52
- Lamps	24 Vdc	110 Vdc
- Resistive load:	1 A / 24 Vdc	1 A / 110 Vdc

DVX

Visual Differential Indicator

Settings	Ordering code
5.0 bar ±10%	DV X 50 x P01
7.0 bar ±10%	DV X 70 x P01
9.5 bar ±10%	DV X 95 x P01

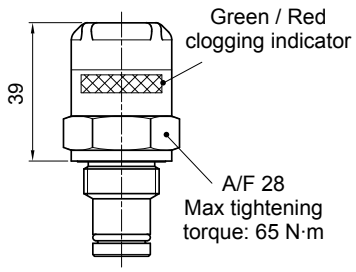

Hydraulic symbol

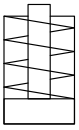

Materials
- Body: AISI 316L
- Internal parts: AISI 316L - Nylon
- Contacts: Silver
- Seal: HNBR - MFQ

Technical data
- Reset: Automatic reset
- Max working pressure: 420 bar
- Proof pressure: 630 bar
- Burst pressure: 1260 bar
- Working temperature: From -25 °C to +110 °C
- Compatibility with fluids: Mineral oils, Synthetic fluids HFA, HFB, HFC according to ISO 2943
- Degree protection: IP65 according to EN 60529

Dimensions

DVY

Visual Differential Indicator

Settings	Ordering code
5.0 bar ±10%	DV Y 50 x P01
7.0 bar ±10%	DV Y 70 x P01
9.5 bar ±10%	DV Y 95 x P01

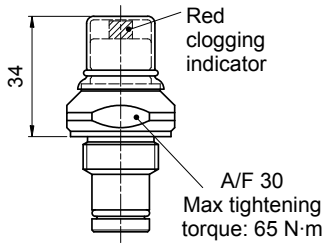

Hydraulic symbol

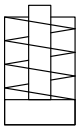

Materials

- Body: AISI 316L
- Internal parts: AISI 316L - Nylon
- Contacts: Silver
- Seal: HNBR - MFQ

Technical data

- Reset: Manual reset
- Max working pressure: 420 bar
- Proof pressure: 630 bar
- Burst pressure: 1260 bar
- Working temperature: From -25 °C to +110 °C
- Compatibility with fluids: Mineral oils, Synthetic fluids HFA, HFB, HFC according to ISO 2943
- Degree protection: IP65 according to EN 60529

X2

Indicator plug

Seal	Ordering code
HNBR	X2 H
MFQ	X2 F

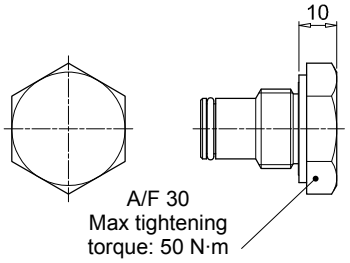

Materials

- Body: AISI 316L
- Seal: HNBR / MFQ

DESIGNATION & ORDERING CODE - DIFFERENTIAL INDICATORS

Configuration example 1:	DE	H	50	F	A	48	P01
Configuration example 2:	DL	X	50	H	A	51	P01
Configuration example 3:	DV	Y	70	V			P01

Series

DE	Electrical differential indicator
DL	Electrical / Visual differential indicator
DV	Visual differential indicator

Type	DE	DL	DV
H Hazardous area	•		
X Standard type	•	•	•
Y Optional type			•

Pressure setting	DEH	DEX	DL	DV
50 5.0 bar	•	•	•	•
70 7.0 bar	•	•	•	•
95 9.5 bar		•	•	•

Seals	DEH	DEX	DL	DV
H HNBR		•	•	•
V FPM	•	•	•	•
F MFQ	•			

Thermostat	DEH	DEX	DL	DV
A Without	•	•	•	

Electrical connections	DEH	DEX	DL	DV
48 Connection via three-core cable - fitting M20x1.5	•			
49 Connection via four-core cable - fitting 1/2” NPT	•			
50 Connection EN 175301-803		•		
51 Connection EN 175301-803, transparent base with lamps 24 Vdc			•	
52 Connection EN 175301-803, transparent base with lamps 110 Vdc			•	
70 Connection IEC 61076-2-101 D (M12)	•			

Option

P01	MP Filtri standard
Pxx	Customized

DESIGNATION & ORDERING CODE - DIFFERENTIAL INDICATOR PLUG

Configuration example	X2	H

Series

X2	Indicator plug

Seals

H	HNBR
V	FPM
F	MFQ

Clogging indicators are devices that check the life time of the filter elements.
They measure the pressure drop through the filter element directly connected to the filter housing.
These devices trip when the clogging of the filter element causes a pressure drop increasing across the filter element.
Filter elements are efficient only if their Dirt Holding Capacity is fully exploited.
This is achieved by using filter housings equipped with clogging indicators.
The indicator is set to alarm before the element becomes fully clogged.

MP Filtri can supply indicators of the following designs:

- **Vacuum switches and gauges**
- **Pressure switches and gauges**
- **Differential pressure indicators**

These type of devices can be provided with a visual, electrical or both signals.
The electronic differential pressure clogging indicator is also available.
It provides both analogical 4-20 mA output and digital warning (75% of clogging) and alarm (clogging) outputs.

Clogging Indicators



Clogging indicators



Suitable indicator types

VACUUM INDICATORS
Vacuum indicators are used on the Suction line to check the efficiency of the filter element.
They measure the pressure downstream of the filter element.
Standard items are produced with R 1/4" EN 10226 connection.
Available products with R 1/8" EN 10226 to be fitted on MPS series.

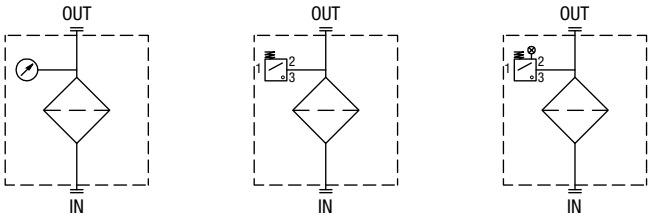

BAROMETRIC INDICATORS
Pressure indicators are used on the Return line to check the efficiency of the filter element.
They measure the pressure upstream of the filter element.
Standard items are produced with R 1/8" EN 10226 connection.

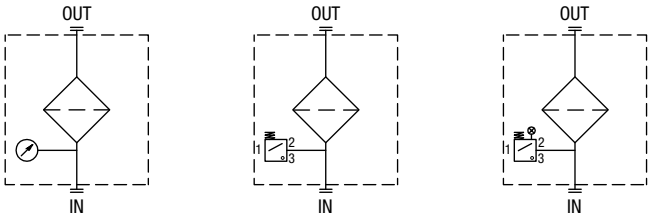

DIFFERENTIAL INDICATORS
Differential indicators are used on the Pressure line to check the efficiency of the filter element.
They measure the pressure upstream and downstream of the filter element (differential pressure).
Standard items are produced with special connection G 1/2" size.
Also available in Stainless Steel models.

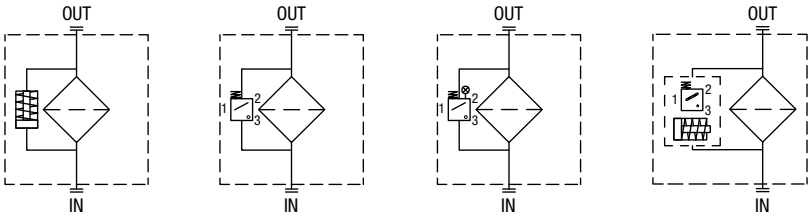

Filter family	Filter series	Electrical indicator	Electrical / Visual indicator	Electronic indicator	Visual indicator
SUCTION FILTERS	ELIXIR® SFEX060-080-110-160	VEB21AA50P01	VLB21AA51P01 VLB21AA52P01 VLB21AA53P01 VLB21AA71P01		VVB16P01 VVS16P01
	SF2 250 - 350 SF2 500 - 501 - 503 - 504 - 505 SF2 510 - 535 - 540	VEA21AA50P01	VLA21AA51P01 VLA21AA52P01 VLA21AA53P01 VLA21AA71P01		VVA16P01 VVR16P01
RETURN FILTERS	With bypass valve — ELIXIR® RFEX060-080-110-160	BEA15HA50P01 BEM15HA41P01	BLA15HA51P01 BLA15HA52P01 BLA15HA53P01 BLA15HA71P01		BVA14P01 BVR14P01 BVP15HP01 BVQ15HP01
	Without bypass valve — ELIXIR® RFEX060-080-110-160	BEA20HA50P01 BEM20HA41P01	BLA20HA51P01 BLA20HA52P01 BLA20HA53P01 BLA20HA71P01		BVA25P01 BVR25P01 BVP20HP01 BVQ20HP01
	With bypass valve — MPFX-MPTX-MPF-MPT - bypass 1.75 bar MPH - bypass 1.75 bar RF2250 - RF2350 - bypass 1.75 bar	BEA15HA50P01 BEM15HA41P01	BLA15HA51P01 BLA15HA52P01 BLA15HA53P01 BLA15HA71P01		BVA14P01 BVR14P01 BVP15HP01 BVQ15HP01
	With bypass valve — MPFX-MPTX-MPF-MPT - bypass 3 bar MPH - bypass 2.5 bar FRI 255 RF2250 - RF2350 - bypass 3 bar	BEA20HA50P01 BEM20HA41P01	BLA20HA51P01 BLA20HA52P01 BLA20HA53P01 BLA20HA71P01		BVA25P01 BVR25P01 BVP20HP01 BVQ20HP01
	MPLX FRI 025 - 040 - 100 - 250 - 630 - 850	DEA20xA50P01 DEM20xA10P01 DEM20xA20P01 DEM20xA30P01 DEM20xA35P01	DLA20xA51P01 DLA20xA52P01 DLA20xA71P01 DLE20xA50P01 DLE20xF50P01	DTA20xF70P01	DVA20xP01 DVM20xP01
RETURN / SUCTION FILTERS	Suction line — MRSX 116 - 165 - 166	VEB21AA50P01	VLB21AA51P01 VLB21AA52P01 VLB21AA53P01 VLB21AA71P01		VVB16P01 VVS16P01
	Return line — MRSX 116 - 165 - 166 LMP 124 MULTIPORT	BEA25HA50P01 BEM25HA41P01 BET25HF10P01 BET25HF30P01 BET25HF50P01	BLA25HA51P01 BLA25HA52P01 BLA25HA53P01 BLA25HA71P01		BVA25P01 BVR25P01 BVP20HP01 BVQ20HP01
SPIN-ON FILTERS	Suction line — MPS 050 - 070 - 100 - 150 MPS 200 - 250 - 300 - 350	VEB21AA50P01	VLB21AA51P01 VLB21AA52P01 VLB21AA53P01 VLB21AA71P01		VVB16P01 VVS16P01
	Return line — MPS 050 - 070 - 100 - 150 MPS 200 - 250 - 300 - 350	BEA15HA50P01 BEM15HA41P01	BLA15HA51P01 BLA15HA52P01 BLA15HA53P01 BLA15HA71P01		BVA14P01 BVR14P01 BVP20HP01 BVQ20HP01
	In-line — MPS 051 - 071 - 101 - 151 MPS 301 - 351 MSH 050 - 070 - 100 - 150	DEA12xA50P01 DEM12xAxxP01	DLA12xA51P01 DLA12xA52P01 DLA12xA71P01 DLE12xA50P01 DLE12xF50P01 DLE20xF50P01 DLE20xF50P01	DTA12xA70P01 DTA12xF70P01 DTA20xA70P01 DTA20xF70P01	DVA12xP01 DVM12xP01

QUICK REFERENCE GUIDE

Filter family	Filter series		Electrical indicator	Electrical / Visual indicator	Electronic indicator	Visual indicator	Hazardous area electronic indicator
LOW & MEDIUM PRESSURE FILTERS	With bypass valve	ELIXIR® LFEX060-080-110-160	DES25HA10P01 DES25HA30P01 DES25HA80P01			DVS25HP01	
	Without bypass valve	ELIXIR® LFEX060-080-110-160	DES40HA10P01 DES40HA30P01 DES40HA80P01			DVS40HP01	
	With bypass valve	LMP 110 - 112 - 116 - 118 - 119 MULTIPORT LMP 120 - 122 - 123 MULTIPORT LMP 210 - 211 - LDP LMP 400 - 401 & 430 - 431 LMP 900 - 901 LMP 902 - 903 LMP 950 - 951 LMP 952 - 953 - 954 LMD 211 - 400 - 401 - 431 - 951 - LDD	DEA20xA50P01 DEM20xAxxP01	DLA20xA51P01 DLA20xA52P01 DLA20xA71P01 DLE20xA50P01 DLE20xF50P01	DTA20xF70P01	DVS25HP01 DVS40HP01 DVA20xP01 DVM20xP01	
	Without bypass valve	LMP 110 - 112 - 116 - 118 - 119 MULTIPORT LMP 120 - 122 - 123 MULTIPORT LMP 210 - 211 - LDP LMP 400 - 401 & 430 - 431 LMP 900 - 901 LMP 902 - 903 LMP 950 - 951 LMP 952 - 953 - 954 LMD 211 - 400 - 401 - 431 - 951 - LDD	DEA50xA50P01 DEM50xAxxP01	DLA50xA51P01 DLA50xA52P01 DLA50xA71P01 DLE50xA50P01 DLE50xF50P01	DTA50xF70P01	DVA50xP01 DVM50xP01	
HIGH PRESSURE FILTERS	With bypass valve	FMP 039 - 065 - 135 - 320 FHP 010 - 011 - 065 - 135 - 350 - 500 FMM 050 - 150 FHA 051 FHM 006 - 007 - 010 - 050 - 065 - 135 - 320 - 500 FHB 050 - 065 - 135 - 320 FHF 325 FHD 021 - 051 - 326 - 333	DEA50xA50P01 DEM50xAxxP01	DLA50xA51P01 DLA50xA52P01 DLA50xA71P01 DLE50xA50P01 DLE50xF50P01	DTA50xF70P01	DVA50xP01 DVM50xP01	DEH50xA48P01 DEH50xA49P01 DEH50xA70P01 DEH70xA48P01 DEH70xA49P01 DEH70xA70P01
	Without bypass valve	FMP 039 - 065 - 135 - 320 FHP 010 - 011 - 065 - 135 - 350 - 500 FMM 050 - 150 FHA 051 FHM 006 - 007 - 010 - 050 - 065 - 135 - 320 - 500 FHB 050 - 065 - 135 - 320 FHF 325 FHD 021 - 051 - 326 - 333	DEA70xA50P01 DEM70xAxxP01 DEA95xA50P01 DEM95xAxxP01	DLA70xA51P01 DLA70xA52P01 DLA70xA71P01 DLE70xA50P01 DLE70xF50P01 DLA95xA51P01 DLA95xA52P01 DLE95xA50P01 DLE95xF50P01	DTA70xF70P01 DTA95xF70P01	DVA70xP01 DVM70xP01 DVA95xP01 DVM95xP01	DEH50xA48P01 DEH50xA49P01 DEH50xA70P01 DEH70xA48P01 DEH70xA49P01 DEH70xA70P01
STAINLESS STEEL HIGH PRESSURE FILTERS	With bypass valve	FZH 010 - 011 - 039 FZP 039 - 136 FZX 011 FZB 039 FZM 039 FZD 051	DEX50xA50P01	DLX50xA51P01 DLX50xA52P01		DVX50xP01 DVY50xP01	DEH50xA48P01 DEH50xA49P01 DEH50xA70P01 DEH70xA48P01 DEH70xA49P01 DEH70xA70P01
	Without bypass valve	FZH 010 - 011 - 039 FZP 039 - 136 FZB 039 FZM 039 FZD 010 - 021 - 051	DEX70xA50P01 DEX95xA50P01	DLX70xA51P01 DLX70xA52P01 DLX95xA51P01		DVX70xP01 DVY70xP01 DVX95xP01 DVY95xP01	DEH50xA48P01 DEH50xA49P01 DEH50xA70P01 DEH70xA48P01 DEH70xA49P01 DEH70xA70P01

NOTES

All data, details and words contained in this publication are provided for information purposes only.
MP Filtri reserves the right to make modifications to the models and versions of the described products at any time for both technical and / or commercial reasons.
The colors and the pictures of the products are purely indicative.
Any reproduction, partial or total, of this document is strictly forbidden.
All rights are strictly reserved.

WORLDWIDE NETWORK

HEADQUARTERS

MP Filtri S.p.A.
Pessano con Bornago
Milano - Italy
+39 02 957031
sales@mpfiltri.it

BRANCH OFFICES

ITALFILTRI LLC
Moscow - Russia
+7 (495) 220 94 60
mpfiltrirussia@yahoo.com

MP Filtri Canada Inc.
Concord, Ontario - Canada
+1 905 303 1369
sales@mpfiltricanada.com

MP Filtri France SAS
Villeneuve la Garenne
France
+33 (0)1 40 86 47 00
sales@mpfiltrifrance.com

MP Filtri Germany GmbH
St. Ingbert - Germany
+49 (0) 6894 95652-0
sales@mpfiltri.de

MP Filtri India Pvt. Ltd.
Bangalore - India
+91 80 4147 7444 / +91 80 4146 1444
sales@mpfiltri.co.in

MP Filtri (Shanghai) Co., Ltd.
Shanghai - Minhang District - China
+86 21 58919916 116
sales@mpfiltrishanghai.com

MP Filtri U.K. Ltd.
Bourton on the Water
Gloucestershire - United Kingdom
+44 (0) 1451 822 522
sales@mpfiltri.co.uk

MP Filtri U.S.A. Inc.
Quakertown, PA - U.S.A.
+1 215 529 1300
sales@mpfiltriusa.com

PASSION TO PERFORM

mpfiltri.com

CMPEN001G
EN - Rev. 06-2021