HYDRAULIC FILTRATION
PRODUCTS

SUCTION FILTERS

PASSION TO PERFORM

MPFILTRI®

A WORLDWIDE LEADER IN THE FIELD OF HYDRAULIC FILTRATION EQUIPMENT.

Our company started life in 1964, when Bruno Pasotto decided to attempt to cater for the requests of a market still to be fully explored, with the study, design, development, production and marketing of a vast range of filters for hydraulic equipment, capable of satisfying the needs of manufacturers in all sectors. The quality of our products, our extreme competitiveness compared with major international producers and our constant activities of research, design and development has made us a worldwide leader in the field of hydraulic circuit filtering.
Present for over 50 years in the market, we have played a truly decisive role in defining our sector, and by now we are a group capable of controlling our entire chain of production, monitoring all manufacturing processes to guarantee superior quality standards and to provide concrete solutions for the rapidly evolving needs of customers and the market.

MARKET **LEADER**

Our work is based on a skillful interaction between advanced technology and fine workmanship, **customizing products according to specific market requests**, focusing strongly on innovation and quality, and following every step in the manufacturing of both standard and special products, fully respecting customer expectations.

Our customer-oriented philosophy, which enables us to satisfy all customer requests **rapidly** and **with personalized products**, makes us a **dynamic and flexible enterprise**. The possibility of constantly controlling and monitoring the entire production process is essential to allow us to guarantee the quality of our products.

WORLDWIDE PRESENCE

Our foreign Branches enable us to offer a diversified range of products that allow us to successfully face the aggressive challenge of international competition, and also to maintain a stable presence at a local level.

The Group boasts **8** **business branches**

TECHNOLOGY

Our constant **quest for excellence in quality and technological innovation** allows us to offer only the best solutions and services for applications in many fields, including general industry, test rigs, lubrication, heavy engineering, renewable energies, naval engineering, offshore engineering, aviation systems, emerging technologies and mobile plant (i.e. tractors, excavators, concrete pumps, platforms).

AND PRODUCTION

Our high level of technological expertise means **we can rely entirely on our own resources, without resorting to external providers.** This in turn enables us to satisfy a growing number of customer requests, also exploiting our constantly updated range of machines and equipment, featuring **fully-automated workstations** capable of **24-hour production**.

SUCTION FILTERS

Flow rates
up to 875 l/min

Mounting:
- Tank immersed
- In-Line
- In tank with shut off valve
- In tank with flooded suction

RETURN FILTERS

Flow rates
up to 3000 l/min

Pressure
up to 20 bar

Mounting:
- In-Line
- Tank top
- In single and duplex designs

RETURN / SUCTION FILTERS

Flow rates
up to 300 l/min

Pressure
up to 80 bar

Mounting:
- In-Line
- Tank top

SPIN-ON FILTERS

Flow rates
up to 365 l/min

Pressure
up to 35 bar

Mounting:
- In-Line
- Tank top

LOW & MEDIUM PRESSURE FILTERS

Flow rates
up to 3000 l/min

Pressure
up to 80 bar

Mounting:
- In-Line
- Parallel manifold version
- In single and duplex designs

HIGH PRESSURE FILTERS

Flow rates
up to 750 l/min

Pressure from 110 bar
up to 560 bar

Mounting:
- In-Line
- Manifold
- In single and duplex designs

PRODUCT RANGE

MP Filtri can offer a vast and articulated range of products for the global market, suitable for all industrial sectors using hydraulic equipment.

This includes filters (suction, return, return/suction, spin-on, pressure, stainless steel pressure) and structural components (motor/pump bell-housings, transmission couplings, damping rings, foot brackets, aluminium tanks, cleaning covers).

We can provide all the skills and solutions required by the modern hydraulics industry to monitor contamination levels and other fluid conditions.

Mobile filtration units and a full range of accessories allow us to supply everything necessary for a complete service in the hydraulic circuits.

STAINLESS STEEL HIGH PRESSURE FILTERS

Flow rates
up to 125 l/min

Pressure from 320 bar
up to 1000 bar

Mounting:
- In-Line
- Manifold
- In single
  and duplex designs

CONTAMINATION MONITORING PRODUCTS

- Online, in-line particle counters
- Off-line bottle sampling products
- Fully calibrated using relevant ISO standards
- A wide range of variants to support fluid types and communication protocols

MOBILE FILTRATION UNITS

Flow rates from 15 l/min
up to 200 l/min

POWER TRANSMISSION PRODUCTS

- Aluminium bell-housings for motors from 0.12 kW to 400 kW
- Couplings in Aluminium Cast Iron - Steel
- Damping rings
- Foot bracket
- Aluminium tanks
- Cleaning covers

TANK ACCESSORIES

- Oil filler and air breather plugs
- Optical and electrical level gauges
- Pressure gauge valve selectors
- Pipe fixing brackets
- Pressure gauges

HYDRAULIC FILTRATION PRODUCTS

1 page	INTRODUCTION
1	COMPANY
6	PRODUCT RANGE
11	CONTAMINATION MANAGEMENT
22	FILTER SIZING
24	CORRECTIVE FACTOR

28 page	SUCTION FILTERS		up to Q_{max} l/min	up to Q_{max} gpm
31	STR & MPA - MPM	Submerged suction filter, with bypass or magnetic filter	1000	264
39	SF2 250 - 350	Semi-submerged positive head suction filter, low flow rate	160	42
47	SF2 500	Semi-submerged positive head suction filter, high flow rate	700	185
57	CLOGGING INDICATORS			

60 page	RETURN FILTERS		up to P_{max} bar	up to P_{max} psi	up to Q_{max} l/min	up to Q_{max} gpm
63	MPFX	Tank top semi-immersed filter, standard filter element disassembly	8	116	900	238
91	MPLX	Tank top semi-immersed filter, standard filter element disassembly	10	145	1800	476
99	MPTX	Tank top semi-immersed filter, easy filter element disassembly	8	116	300	79
117	MFBX	Bowl assembly	8	116	700	185
125	MPF	Tank top semi-immersed filter, standard filter element disassembly	8	116	900	238
153	MPT	Tank top semi-immersed filter, easy filter element disassembly	8	116	300	79
171	MFB	Bowl assembly	8	116	700	185
179	MPH	Tank top semi-immersed filter, standard filter element disassembly	10	145	3500	925
203	MPI	Tank top semi-immersed filter, standard filter element disassembly	10	145	3500	925
215	FRI	Tank top semi-immersed filter, easy filter element disassembly, it can be used also as in-line filter	20	290	2500	660
231	RF2	Semi-immersed under-head filter, easy filter element disassembly	20	290	615	162
238	CLOGGING INDICATORS					
248	ACCESSORIES					

250 page	RETURN / SUCTION FILTERS		up to P_{max} bar	up to P_{max} psi	up to Q_{max} l/min	up to Q_{max} gpm
253	MRSX	Unique TANK TOP filter for mobile machinery, with combined filtration on return and suction to the inlet at the hydrostatic transmissions in closed circuit	10	145	250	66
265	LMP 124 MULTIPORT	Unique IN-LINE filter for mobile machinery, with combined filtration on return and suction to the inlet at the hydrostatic transmissions in closed circuit	80	1160	120	32
273	CLOGGING INDICATORS					

286 page	SPIN-ON FILTERS		up to P_{max} bar	up to P_{max} psi	up to Q_{max} l/min	up to Q_{max} gpm
289	MPS	Low pressure filter, available with single cartridge (CS) for in-line or flange mounting or with two cartridge on the same axis on the opposite sides	12	174	365	96
305	MSH	In-line low and medium pressure filter available with single cartridge (CH)	35	508	195	52
311	CLOGGING INDICATORS					

INDEX

322 page	LOW & MEDIUM PRESSURE FILTERS		up to P_{max} bar	psi	up to Q_{max} l/min	gpm
325	LMP 110 - 120 - 123 MULTIPORT	In-line filter with Multiport design for multiple choice connection	80	1160	175	46
341	LMP 210 - 211	In-line low & medium pressure filter, low flow rate	60	870	365	96
351	LMP 400 - 401 & 430 - 431	In-line low & medium pressure filter, high flow rate	60	870	780	206
363	LMP 950 - 951	In-line filter, available with 2 and up to 6 different heads	30	435	2400	634
371	LMP 952 - 953 - 954	In-line low pressure filter specifically designed to be mounted in series	25	363	4500	1189
383	LMD 211	In-line duplex medium pressure filter	60	870	200	53
391	LMD 400 - 401 & 431	In-line duplex low pressure filter	16	232	600	159
407	LMD 951	In-line duplex filter, available with 2 up to 6 different heads	16	232	1200	317
415		Filter elements designed according to DIN 24550				
417	LDP - LDD	In-line and duplex medium pressure filter	60	870	360	95
427	LMP 900 - 901	In-line low pressure filter	30	435	2000	528
435	LMP 902 - 903	In-line filter specifically designed to be mounted in series	20	290	3000	793
444	CLOGGING INDICATORS					
450	ACCESSORIES					

452 page	HIGH PRESSURE FILTERS		up to P_{max} bar	psi	up to Q_{max} l/min	gpm
455	FMP 039	Filter high pressure, low flow rate applications	110	1595	80	21
463	FMP	Filter high pressure, high flow rate applications	320	4641	500	132
475	FHP	Typical high pressure filter for mobile applications, high flow rate	420	6092	630	166
493	FMM	Typical high pressure filter for mobile applications, low flow rate	420	6092	300	79
503	HPB	Pressure filter kits for integration in control manifolds	420	6092	300	79
513	FHA 051	Filter optimized for use in high pressure operating systems, low flow rate	560	8122	150	40
521	FHM	High pressure filter with intermediate manifold construction	320	4641	400	106
539	FHB	High pressure for block mounting	320	4641	485	128
553	FHF 325	In-line manifold top mounting	350	5076	550	145
563	FHD	In-line duplex high pressure filter	350	5076	250	66
576	CLOGGING INDICATORS					

584 page	STAINLESS STEEL HIGH PRESSURE FILTERS		up to P_{max} bar	psi	up to Q_{max} l/min	gpm
587	FZP	In-line pressure filter with threaded mount	420	6092	160	42
597	FZH	In-line pressure filter with threaded mount for higher pressure	700	10153	80	21
607	FZX	In-line pressure filter with threaded mount up to 1000 bar	1000	14504	10	3
615	FZM	Manifold top mounting	320	4641	70	18
623	FZB	Manifold side mounting	320	4641	70	18
631	FZD	Duplex pressure filter for continuous operation requirements	350	5076	60	16
641	CLOGGING INDICATORS					

646 page	CLOGGING INDICATORS
649	QUICK REFERENCE GUIDE

THE CORRECT FILTER SIZING HAVE TO BE BASED ON THE TOTAL PRESSURE DROP DEPENDING BY THE APPLICATION.
FOR EXAMPLE, THE MAXIMUM TOTAL PRESSURE DROP ALLOWED BY A NEW AND CLEAN RETURN FILTER HAVE TO BE IN THE RANGE 0.4 - 0.6 bar / 5.80 - 8.70 psi.

The pressure drop calculation is performed by adding together the value of the housing with the value of the filter element. The pressure drop Δpc of the housing is proportional to the fluid density (kg/dm³ / lb/ft³).
The filter element pressure drop Δpe is proportional to its viscosity (mm²/s / SUS), the corrective factor Y have to be used in case of an oil viscosity different than 30 mm²/s (cSt) / 150 SUS.

Sizing data for single filter element, head at top

Δpc = Filter housing pressure drop [bar / psi]
Δpe = Filter element pressure drop [bar / psi]
Y = Corrective factor Y (see correspondent table), depending on the filter type, on the filter element size, on the filter element length and on the filter media
Q = flow rate (l/min - gpm)
V1 reference oil viscosity = 30 mm²/s (cSt) /150 SUS
V2 = operating oil viscosity in mm²/s (cSt) / SUS

Filter element pressure drop calculation with an oil viscosity different than 30 mm²/s (cSt) / 150 SUS

International system:
Δpe = Y : 1000 x Q x (V2:V1)

Imperial system:
Δpe = Y : 17.2 x Q x (V2:V1)

Δp Tot. = Δpc + Δpe

Verification formula

Δp Tot. ≤ Δp max allowed

Maximum total pressure drop (Δp max) allowed by a new and clean filter

Application	Range:[bar]	[psi]	
Suction filters	0.08 - 0.10 bar	1.16 - 1.45 psi	
Return filters	0.4 - 0.6 bar	5.80 - 8.70 psi	
Return - Suction filters (*)	0.8 - 1.0 bar	11.60 - 14.50 psi	
Low & Medium Pressure filters	0.4 - 0.6 bar	5.80 - 8.70 psi	return lines
	0.3 - 0.5 bar	4.35 - 7.25 psi	lubrication lines
	0.3 - 0.4 bar	4.35 - 5.80 psi	off-line in power systems
	0.1 - 0.3 bar	1.45 - 4.35 psi	off-line in test benches
	0.4 - 0.6 bar	5.80 - 8.7 psi	over-boost
High Pressure filters	0.8 - 1.5 bar	11.60 - 21.75 psi	
Stainless Steel filters	0.8 - 1.5 bar	11.60 - 21.75 psi	

(*) The suction flow rate should not exceed 30% of the return flow rate

Generic filter calculation example

Application data:
Tank top return filter
Pressure Pmax = 10 bar
Flow rate Q = 120 l/min
Viscosity V2 = 46 mm²/s (cSt)
Oil density = 0.86 kg/dm³
Required filtration efficiency = 25 µm with absolute filtration
With bypass valve and G 1 1/4" inlet connection

Calculation:
Δpc = 0.03 bar / 0.43 psi (see graphic below)

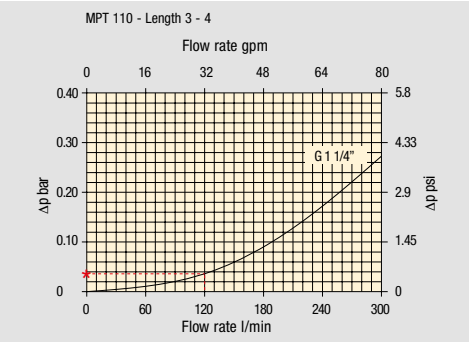

Filter housings Δp pressure drop.
The curves are plotted using mineral oil with density of 0.86 kg/dm³ in compliance with ISO 3968.
Δp varies proportionally with density.

Δpe = (2.00 : 1000) x 120 x (46 : 30) = 0.37 bar
Δpe = (2.00 : 17.2) x 32 x (216 : 150) = 5.36 psi

Filter element		Absolute filtration H Series					Nominal filtration N Series		
Type		A03	A06	A10	A16	A25	P10	P25	M25 M60 M90
Return filters		74.00	50.08	20.00	16.00	9.00	6.43	5.51	4.40
MF 020	2	29.20	24.12	8.00	7.22	5.00	3.33	2.85	2.00
	3	22.00	19.00	6.56	5.33	4.33	1.68	1.44	1.30
MF 030 MFX 030	1	74.00	50.08	20.00	16.00	9.00	6.43	5.51	3.40
MF 100 MFX 100	1	28.20	24.40	8.67	8.17	6.88	4.62	3.96	1.25
	2	17.33	12.50	6.86	5.70	4.00	3.05	2.47	1.10
	3	10.25	9.00	3.65	3.33	2.50	1.63	1.32	0.96
	4	6.10	5.40	2.30	2.20	2.00	1.19	0.96	0.82

Δp Tot. = 0.03 + 0.37 = 0.4 bar
Δp Tot. = 0.43 + 5.36 = 5.79 psi

The selection is correct because the total pressure drop value is inside the admissible range for top tank return filters.
In case the allowed max total pressure drop is not verified, it is necessary to repeat the calculation changing the filter length/size.

Corrective factor

Corrective factor Y to be used for the filter element pressure drop calculation. The values depend to the filter size and length and to the filter media.
Reference oil viscosity 30 mm^2/s

Suction filters

	Nominal filtration - N Series					
Type	**P10**	**P25**	**M25**	**M60**	**M90**	**M250**
SF 250	0.65	0.20	0.10	0.08	0.05	0.03
SF 503	–	–	0.17	0.11	0.11	0.11
SF 504	–	–	0.11	0.08	0.08	0.08
SF 505	–	–	0.23	0.18	0.18	0.18
SF 510	–	–	0.18	0.14	0.14	0.14
SF 535	–	–	0.08	0.05	0.05	0.05
SF 540	–	–	0.05	0.04	0.04	0.04

TYPICAL FILTER SIZING Selection Software

Step 1

Select “FILTER SIZING SOFTWARE” after login

OR

Select “FILTER SIZING” after login from a product page

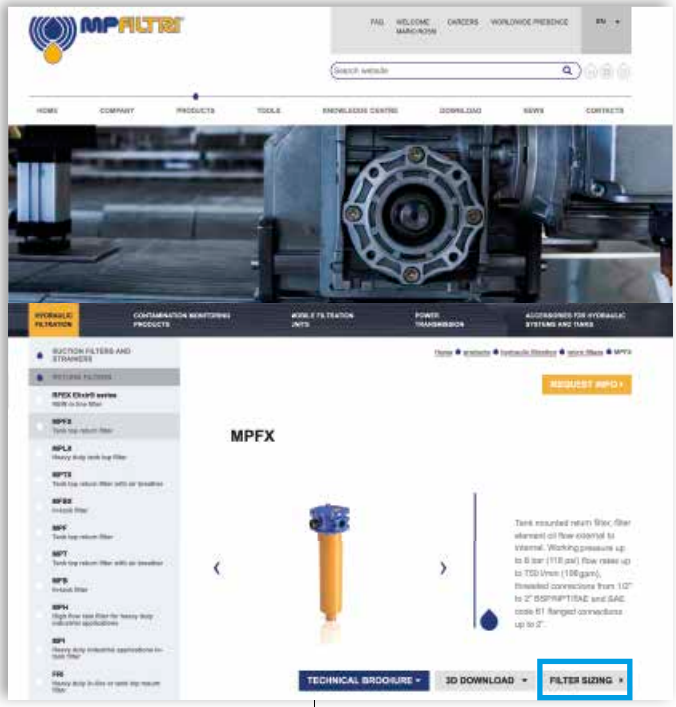

Step 2

Choose the type of filter family.
Enter the main data for sizing the filter
then push CALCULATE.

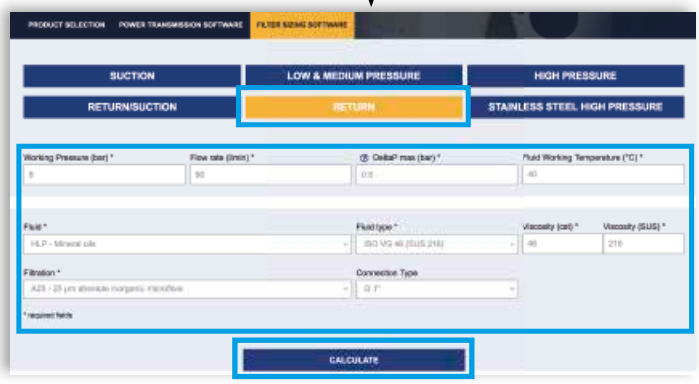

Enter the main data for sizing the filter
then push CALCULATE.

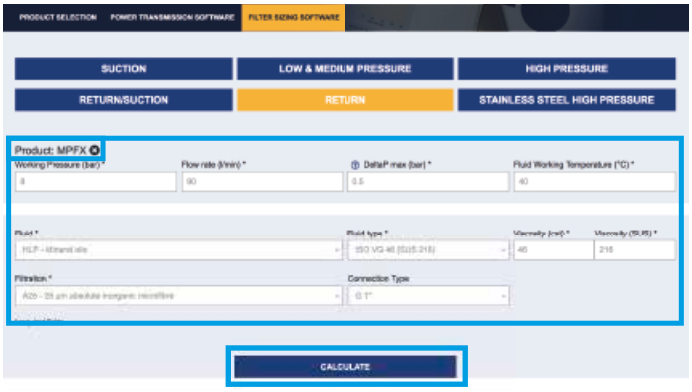

Step 3

Select the desidered options to choose the appropriate filter type for the application.

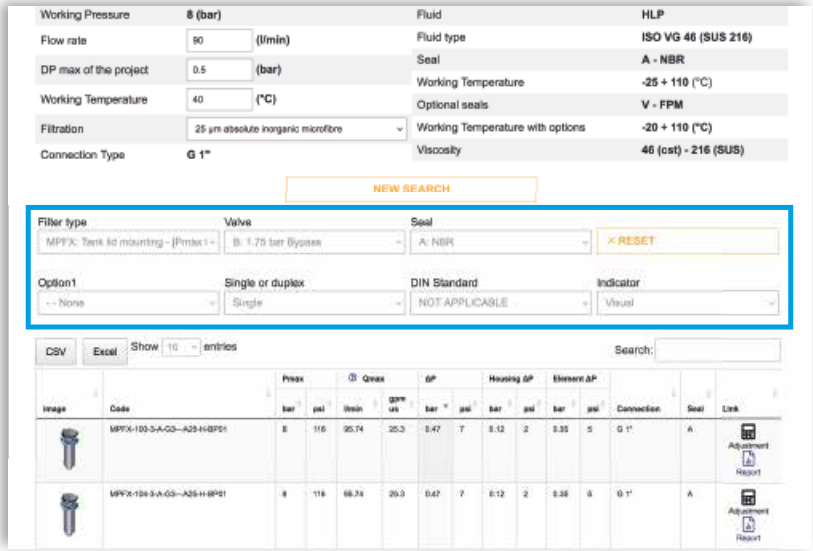

Step 4

Choose the most suitable filter from the proposed list.

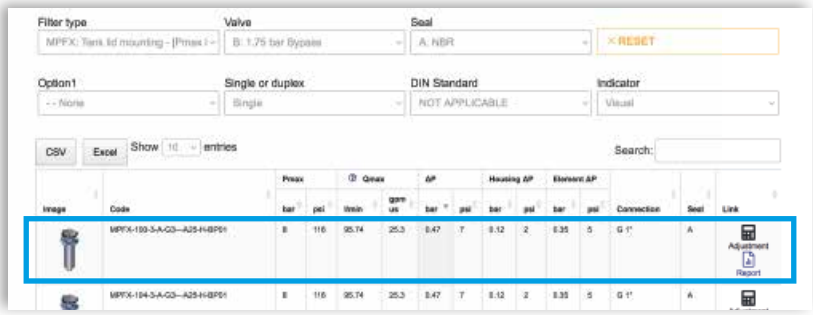

Step 5

A SAVE YOUR FILTER'S REPORT

B MANUAL EDIT

It is possible to change the filter modifying every parameter.

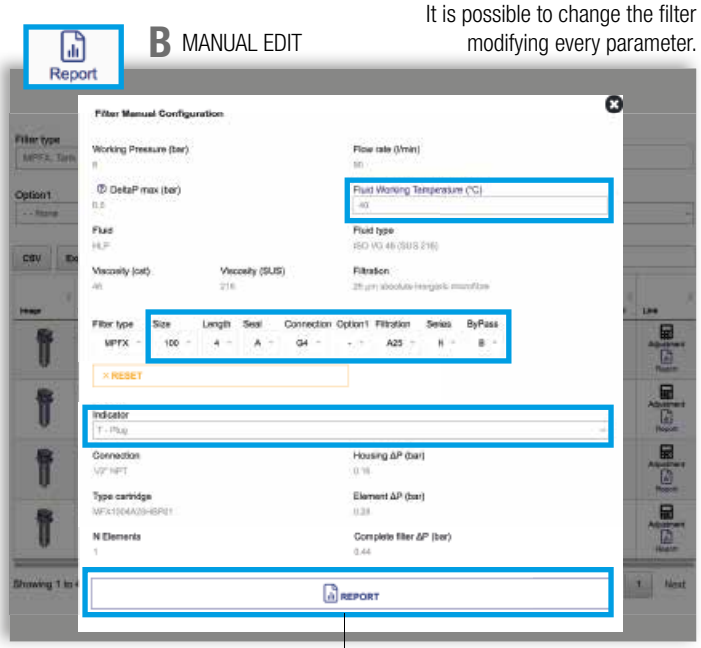

SAVE IN YOUR ARCHIVE
typing your reference data and then SAVE AS PDF

A new browser window displays the pdf

see **A**

Close the report window

By clicking your WELCOME button, the SHOW REPORTS is displayed: select it to see your filters list.

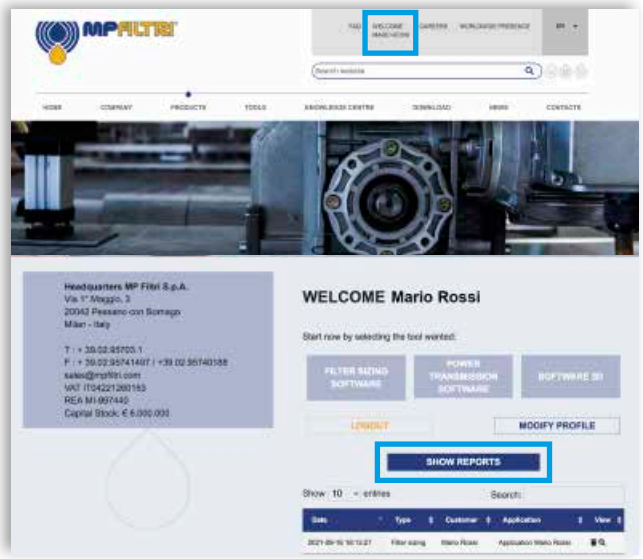

Suction filters are used as safety filters to protect pumps from gross contamination which can cause them to grip.

They are available in 2 styles:
- Suction Strainer (STR, MPA, MPM)
- SF2 external filters, for mounting semi-immersed under the oil level

SF2 semi-immersed filters, which shut-off oil flow while the filter element is being replaced, replace the butterfly valves usually used for servicing hydraulic pumps.

FILTER SIZING

For the proper corrective factor Y see chapter at page 25

Suction filters

STR & MPA - MPM	page 31
SF2 250 - 350	39
SF2 500	47
INDICATORS	57

STR & MPA - MPM series

Flow rate up to 1000 l/min

STR & MPA-MPM GENERAL INFORMATION

Description

Suction filters

Flow rate up to 1000 l/min

STR

STR is a range of suction strainers for protection of the downstream pump against the coarse contamination.
They are placed below the oil level directly connected to the suction line of the pump.

Available features:
- Female threaded connections up to 3", for a maximum flow rate of 875 l/min
- Bypass valve, to relieve excessive pressure drop across the filter media

Common application:
- Mobile machines (Construction and Agriculture machines)
- Industrial equipment

MPA - MPM

MPA and MPM are ranges of suction strainers for protection of the downstream pump against the coarse contamination.
They are placed below the minimum oil level, directly connected to the suction line of the pump.
The robust design allows the use of these filters in any heavy duty application.

Available features:
- Female threaded connections up to 3", for a maximum flow rate of 875 l/min
- Magnetic filter (MPM), to hold the ferrous particles

Common application:
Industrial equipment

Technical data

STR materials
1 - Connection: Polyamide, GF reinforced
2 - Core tube: Tinned Steel
3 - Wire mesh
4 - End cap: Polyamide, GF reinforced
5 - Bypass valve: Polyamide, GF reinforced - Steel

MPA - MPM materials
1 - Connection: Aluminium
2 - Magnetic filter
3 - Tie rod: Galvanized Steel
4 - End cap: Galvanized Steel
5 - Core tube: Galvanized Steel
6 - Filter media: Wire mesh
7 - Bottom: Galvanized Steel
8 - Washer: Galvanized Steel
9 - Self-locking nut: Galvanized Steel - Nylon

Bypass valve
Opening pressure 30 kPa (0.3 bar)

Elements
Fluid flow through the filter element from OUT to IN.

Temperature
From -25 °C to +110 °C

Weights [kg]

Filter series	
STR	see page 35
MPA - MPM	see page 37

STR
Without bypass

STR
With bypass

MPA
Without magnetic filter

MPM
With magnetic filter

FILTER ASSEMBLY SIZING
Flow rates [l/min]

Filter series	Thread	l/min
STR & MPA - MPM	3/8”	19
	1/2”	28
	3/4”	67
	1”	126
	1 1/4”	167
	1 1/2”	258
	2”	480
	2 1/2”	854
	2”	480
	3”	995

Maximum flow rate for a complete suction filter with a pressure drop Δp = 0.08 bar.
The reference fluid has a kinematic viscosity of 30 mm^2/s (cSt) and a density of 0.86 kg/dm^3.
For different pressure drop or fluid viscosity we recommend to use our selection software available on www.mpfiltri.com.
You can also calculate the right size using the formulas present on the FILTER SIZING paragraph at the beginning of the full catalogue or at the beginning of the filter family brochure.
Please, contact our Sales Department for further additional information.

Hydraulic symbols

Filter series	Style S	Style B
STR	•	•
MPA - MPM	•	

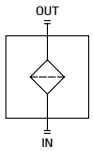

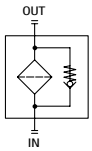

Pressure drop
Filters pressure drop Δp
in function of connection type

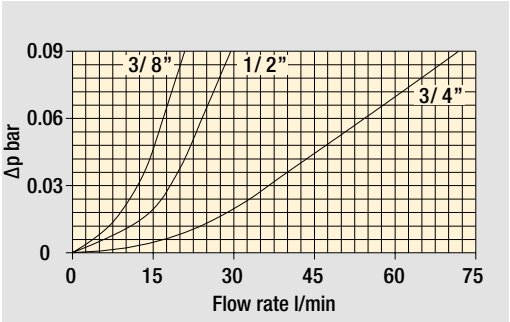

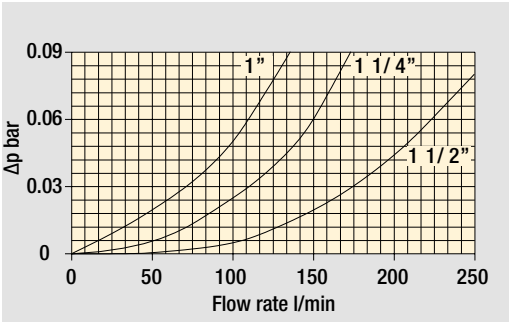

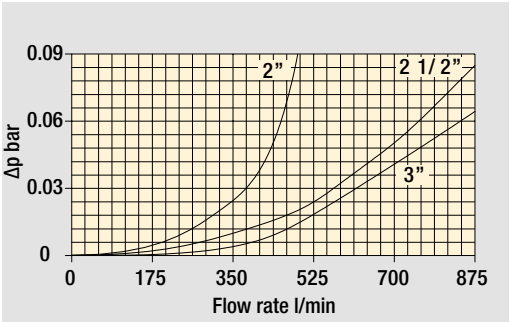

The curves are plotted using mineral oil with density of 0.86 kg/dm^3 in compliance with ISO 3968. Δp varies proportionally with density.

STR

Designation & Ordering code

COMPLETE FILTER

Configuration example 1:	STR045	1	B	G1	M60	P01
Configuration example 2:	STR100	4	S	G2	M250	P01

Element series and size

STR045
STR050
STR065
STR070
STR086
STR100
STR140
STR150

Connection type

	STR045	STR050	STR065	STR070	STR086	STR100	STR140	STR150
1	3/8”	3/8”	1/2”	1/2”	1 1/2”	1 1/4”	1 1/2”	2”
2	1/2”	1/2”	3/4”	3/4”	2”	1 1/4”	2”	2 1/2”
3	-	-	3/4”	3/4”	1 1/2”	1 1/2”	2”	3”
4	-	-	1”	1”	2”	2”	2 1/2”	-
5	-	-	-	-	1 1/2”	1 1/2”	3”	-
6	-	-	-	1/2”	2”	-	3”	-

Valves

S	Without bypass
B	With bypass 0.3 bar

Thread type

G1	Thread GAS
G2	Thread NPT

Filtration rating (filter media)

M25	Wire mesh	25 µm
M60	Wire mesh	60 µm
M90	Wire mesh	90 µm
M250	Wire mesh	250 µm

Execution

P01	MP Filtri standard
Pxx	Customized

OTHER INFORMATION

Conditions of packaging

Filter size	Pcs. per box
045	12
050	12
065	6
070	6
086	6
100	6
140	1
150	1

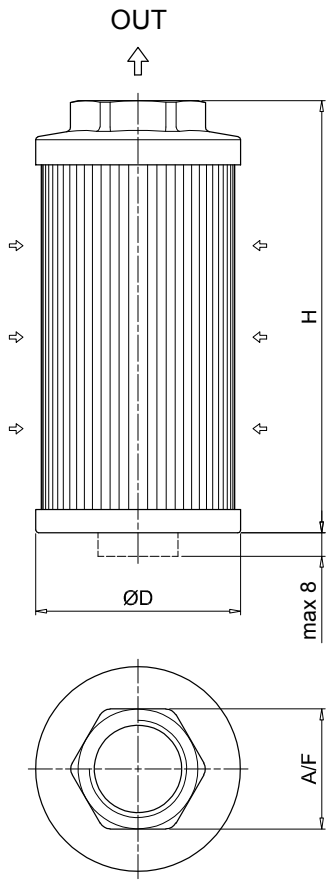

STR						
Filter size	Connection type	Thread	Ø D [mm]	H [mm]	A / F [mm]	Weight [kg]
045	1	3/8”	46	105	30	0.15
	2	1/2”	46	105	30	0.19
050	1	3/8”	52	79	30	0.11
	2	1/2”	52	79	30	0.11
065	1	1/2”	65	110	41	0.19
	2	3/4”	65	110	41	0.22
	3	3/4”	65	144	41	0.24
	4	1”	65	144	41	0.22
070	1	1/2”	70	95	41	0.18
	2	3/4”	70	95	41	0.17
	3	3/4”	70	141	41	0.23
	4	1”	70	141	41	0.22
	6	1/2”	70	141	41	0.24
086	1	1 1/2”	86	143	69	0.33
	2	2”	86	143	69	0.30
	3	1 1/2”	86	201	69	0.43
	4	2”	86	201	69	0.40
	5	1 1/2”	86	261	69	0.53
	6	2”	86	261	69	0.50
100	1	1 1/4”	99	137	69	0.47
	2	1 1/4”	99	227	69	0.58
	3	1 1/2”	99	227	69	0.55
	4	2”	99	227	69	0.51
	5	1 1/2”	99	137	69	0.43
140	1	1 1/2”	130	160	69	0.70
	2	2”	130	160	69	0.68
	3	2”	130	262	69	0.94
	4	2 1/2”	130	272	101	1.10
	5	3”	130	272	101	1.00
	6	3”	130	330	101	1.17
150	1	2”	150	150	70	0.34
	2	2 1/2”	150	212	90	0.37
	3	3”	150	272	100	0.40

MPA-MPM

Designation & Ordering code

COMPLETE FILTER

Configuration example 1:	MPA	030	G1	M60	P01
Configuration example 2:	MPM	430	G2	M250	P01

Element series

MPA	Without magnetic filter
MPM	With magnetic filter

Connections

012	3/8”
015	1/2”
025	1/2”
030	3/4”
045	3/4”
050	1”
075	1”
095	1 1/4”
120	1 1/4”
150	1 1/2”
180	1 1/2”
220	2”
280	2”
300	2 1/2”
380	2”
430	3”

Thread type

G1	Thread GAS
G2	Thread NPT

Filtration rating (filter media)

M25	Wire mesh	25 µm
M60	Wire mesh	60 µm
M90	Wire mesh	90 µm
M250	Wire mesh	250 µm

Execution

P01	MP Filtri standard
Pxx	Customized

OTHER INFORMATION

Conditions of packaging

Size	Pcs. per box
012	12
015	6
025	6
030	6
045	6
050	6
075	6
095	6
120	6
150	6
180	1
220	1
280	1
300	1
380	1
430	1

Dimensions

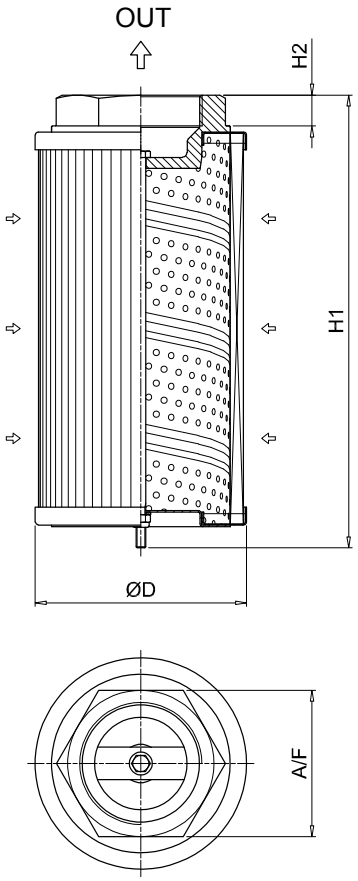

MPA

Filter size	Thread	ØD [mm]	H1 [mm]	H2 [mm]	A/F [mm]	Weight [kg]
012	3/8”	50	98	16	28	0.17
015	1/2”	50	98	16	28	0.17
025	1/2”	70	113	16	28	0.27
030	3/4”	70	115	18	42	0.36
045	3/4”	70	160	18	42	0.39
050	1”	70	160	18	42	0.35
075	1”	99	145	18	42	0.54
095	1 1/4”	99	148	20	60	0.63
120	1 1/4”	99	239	20	60	0.95
150	1 1/2”	99	239	20	60	0.91
180	1 1/2”	130	174	20	60	0.98
220	2”	130	162	13	80	1.00
280	2”	130	272	13	80	1.60
300	2 1/2”	130	281	20	90	1.67
380	2”	130	322	13	80	1.60
430	3”	130	335	22	106	1.93

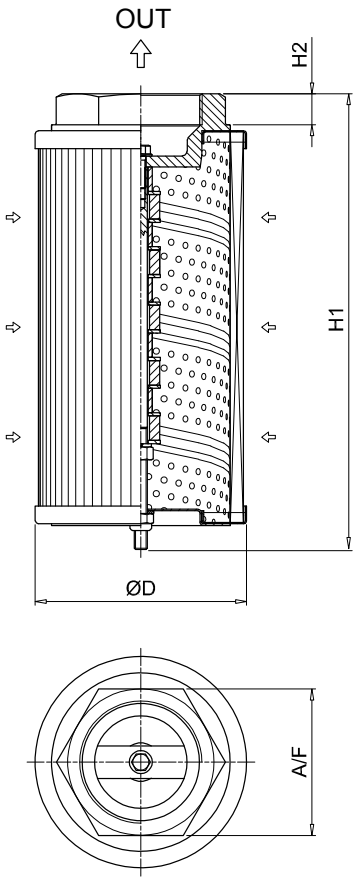

MPM

Filter size	Thread	ØD [mm]	H1 [mm]	H2 [mm]	A/F [mm]	Weight [kg]
012	3/8”	50	98	16	28	0.17
015	1/2”	50	98	16	28	0.17
025	1/2”	70	113	16	28	0.27
030	3/4”	70	115	18	42	0.36
045	3/4”	70	160	18	42	0.39
050	1”	70	160	18	42	0.35
075	1”	99	148	18	42	0.54
095	1 1/4”	99	154	20	60	0.63
120	1 1/4”	99	244	20	60	0.95
150	1 1/2”	99	244	20	60	0.91
180	1 1/2”	130	174	20	60	0.98
220	2”	130	163	13	80	1.00
280	2”	130	273	13	80	1.60
300	2 1/2”	130	282	20	90	1.67
380	2”	130	323	13	80	1.60
430	3”	130	336	22	106	1.93

SF2 250-350 series

Flow rate up to 160 l/min

SF2 250-350 GENERAL INFORMATION

Description

Suction filters

Flow rate up to 160 l/min

SF2 250 and SF2 350 are ranges of suction filters with integrated shut-off valve for protection of the downstream pump against the coarse contamination.
They are placed below the minimum oil level, directly connected to the suction line of the pump.
They can be fitted on the side or below the tank, allowing a more flexible design of the tank.
The shut-off valve closes automatically when the cover is removed, allowing the filter element replacement without the fluid drop.

Available features:
- Female threaded connections up to 1" and flanged connections up to 1 1/2", for a maximum flow rate of 160 l/min
- Multiple connections, to connect several suction lines
- Bypass valve, to relieve excessive pressure drop across the filter media
- Magnetic filter, to hold the ferrous particles
- Visual, electrical and electronic clogging indicators

Common application:
- Mobile machines
- Industrial equipment

Technical data

Filter housing materials
- Filter body: Aluminium
- Cover: Polyamide, GF reinforced
- Valve: Polyamide, GF reinforced - Steel
- Anti-Emptying valve: Steel

Bypass valve
Opening pressure 30 kPa (0.3 bar) ±10%

Elements
Fluid flow through the filter element from IN to OUT

Seals
- Standard NBR series A
- Optional FPM series V

Temperature
From -25 °C to +110 °C

Note
SF2 250-350 filters mounting, see the drawings on page 43 and following.

Weights [kg]

Filter series	
SF2 250	2.6
SF2 350	2.6

FILTER ASSEMBLY SIZING
Flow rates [l/min]

	Filter element design - N Series					
Filter series	M25	M60	M90	M250	P10	P25
SF2 250	147	151	155	160	85	132
SF2 350	147	151	155	160	85	132

Maximum flow rate for a complete suction filter with a pressure drop Δp = 0.08 bar.
The reference fluid has a kinematic viscosity of 30 mm^2/s (cSt) and a density of 0.86 kg/dm^3.
For different pressure drop or fluid viscosity we recommend to use our selection software available on www.mpfiltri.com.
You can also calculate the right size using the formulas present on the FILTER SIZING paragraph at the beginning of the full catalogue or at the beginning of the filter family brochure.
Please, contact our Sales Department for further additional information.

Hydraulic symbols

Filter series	Style R - S		Style Q - H	
SF2 250	•		•	
SF2 350		•		•

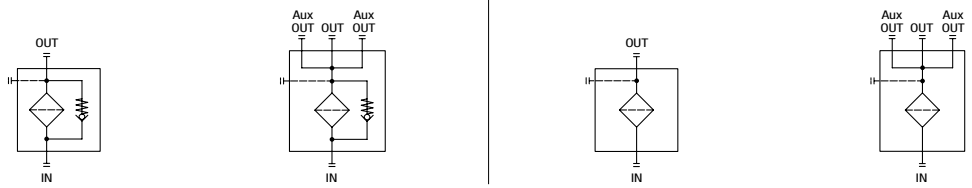

Pressure drop

Filter housings Δp pressure drop

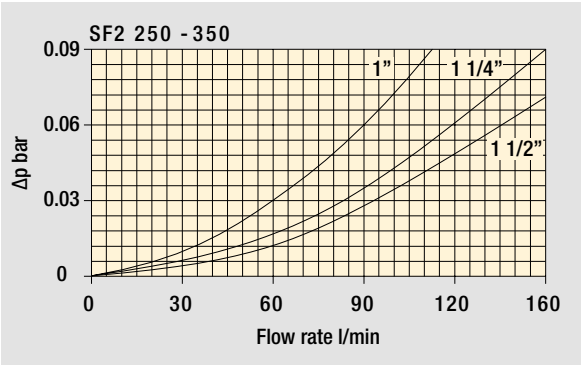

Bypass valve pressure drop

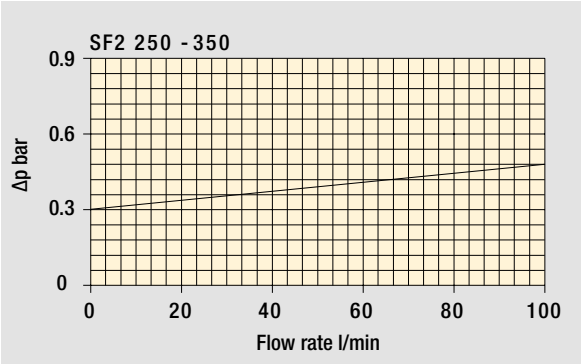

The curves are plotted using mineral oil with density of 0.86 kg/dm^3 in compliance with ISO 3968. Δp varies proportionally with density.

SF2 250-350

Designation & Ordering code

COMPLETE FILTER

Configuration example 1:	SF2250	W	F2	R	M25	P01
Configuration example 2:	SF2350	A	G1	S	M90	P01

Series and size

SF2250
SF2350

Seals and treatments

		Filtration rating Mxx	Pxx
A	NBR	•	•
V	FPM	•	•
W	NBR compatible with fluids HFA-HFB-HFC	•	
Z	FPM compatible with fluids HFA-HFB-HFC	•	

Connections

		Aux (only SF2350)	SF2250	SF2350
G1	G 1 1/2"	G 1"	•	•
G2	1 1/2" NPT	-	•	
G3	SAE 24 - 1 7/8" - 12 UN	SAE 16 - 1 5/16" - 12 UN	•	•
G4	G 1 1/4"	-	•	
G5	1 1/4" NPT	-	•	
G6	SAE 20 - 1 5/8" - 12 UN	-	•	
G7	G 1"	-	•	
G8	1" NPT	-	•	
G9	SAE 16 - 1 5/16" - 12 UN	-	•	
F1	1 1/2" SAE 3000 psi/M	-	•	
F2	1 1/2" SAE 3000 psi/UNC	-	•	

Bypass valve and magnetic filter

R	With bypass, with magnetic filter	**Q**	Without bypass, with magnetic filter
S	With bypass, without magnetic filter	**H**	Without bypass, without magnetic filter

Filtration rating (filter media)

M25	Wire mesh 25 µm	**P10**	Resin impregnated paper 10 µm
M60	Wire mesh 60 µm	**P25**	Resin impregnated paper 25 µm
M90	Wire mesh 90 µm		
M250	Wire mesh 250 µm		

Execution

P01	MP Filtri standard
Pxx	Customized

FILTER ELEMENT

Configuration example 1:	SF250	M25	W	P01
Configuration example 2:	SF250	M90	N	P01

Element series and size

SF250

Filtration rating (filter media)

M25	Wire mesh 25 µm	**P10**	Resin impregnated paper 10 µm
M60	Wire mesh 60 µm	**P25**	Resin impregnated paper 25 µm
M90	Wire mesh 90 µm		
M250	Wire mesh 250 µm		

Seals and treatments

		Filtration rating Mxx	Pxx
N	NBR	•	•
V	FPM	•	•
W	NBR compatible with fluids HFA-HFB-HFC	•	
Z	FPM compatible with fluids HFA-HFB-HFC	•	

Execution

P01	MP Filtri standard
Pxx	Customized

ACCESSORIES

Clogging indicators		page
VVA	Axial vacuum gauge	59
VVR	Radial vacuum gauge	59
VEA	Electrical vacuum indicator	58
VLA	Electrical / visual vacuum indicator	58

SF2 250
Threaded connections “G”

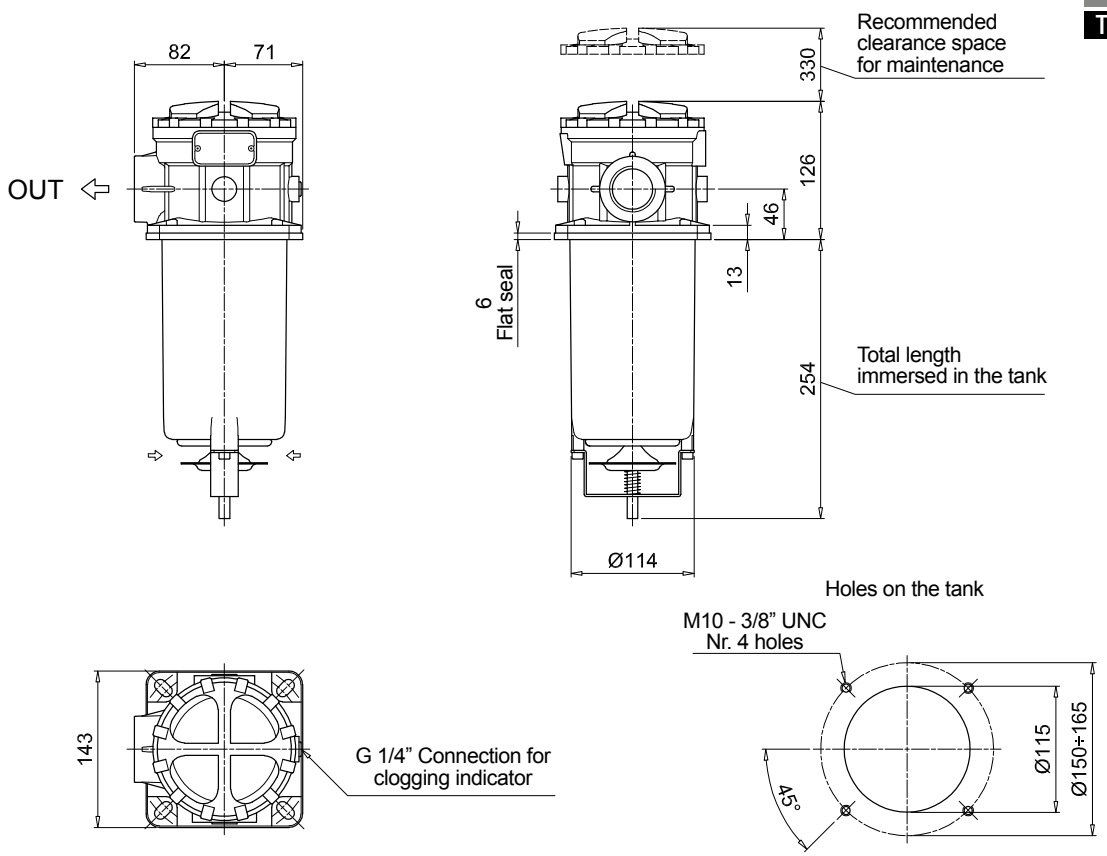

SF2 250
Flange connections “F”

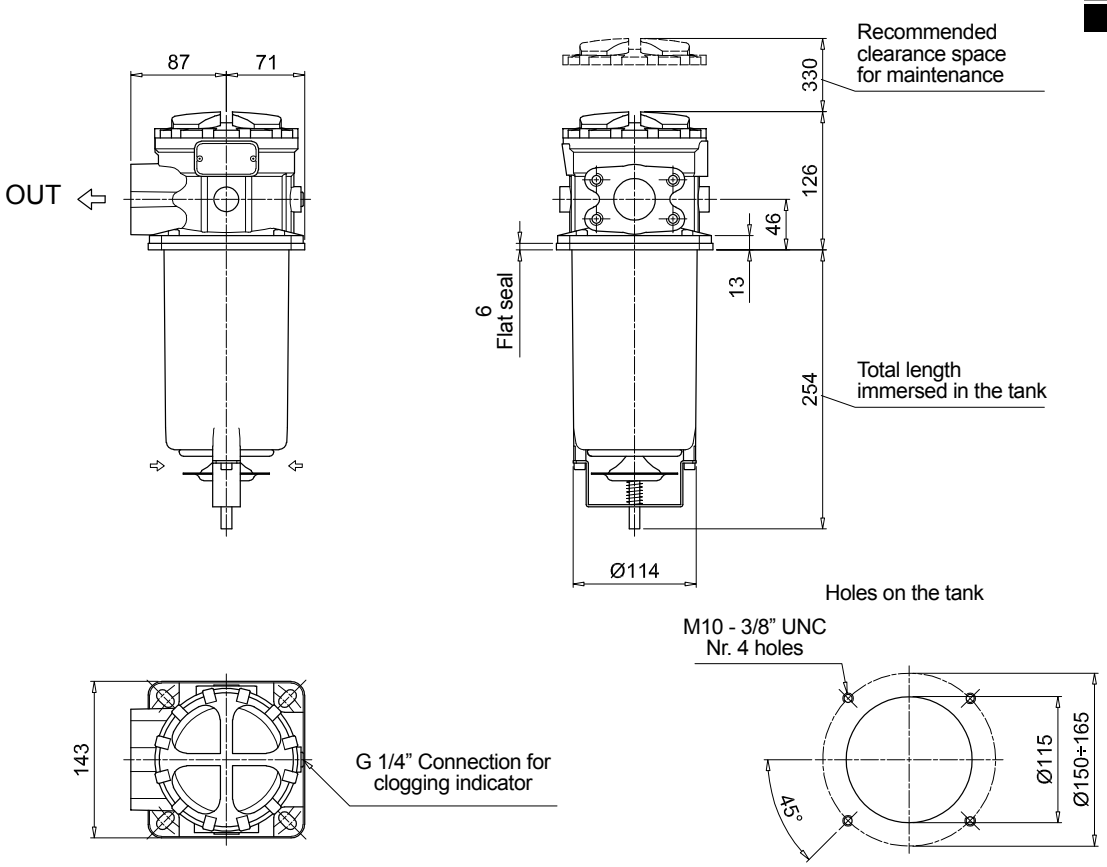

SF2 250-350

Dimensions

SF2 350

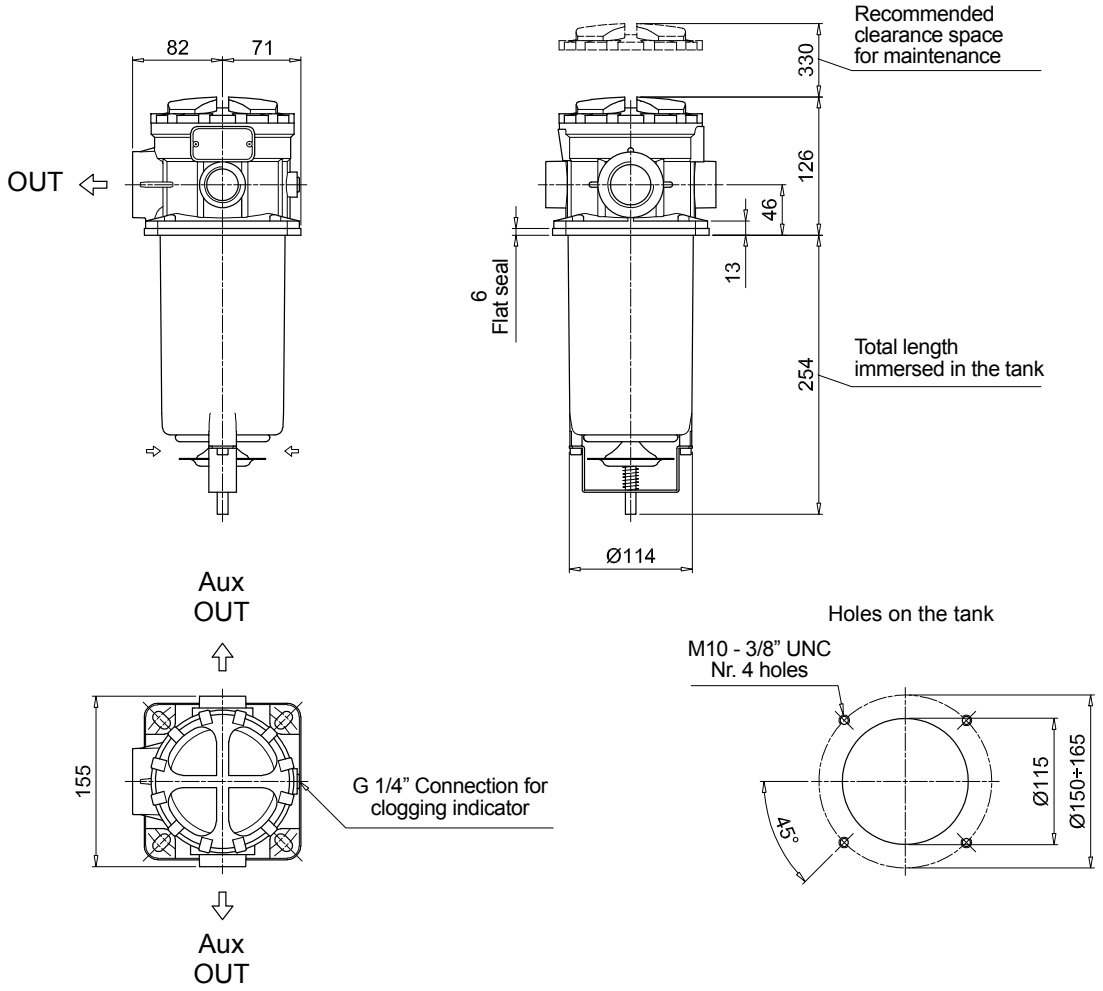

Order number for spare parts

SF2 250

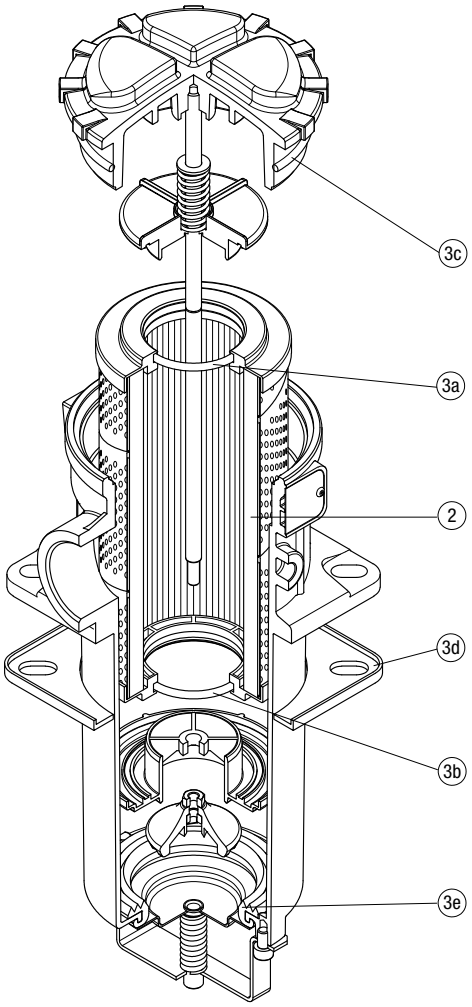

SF2 350

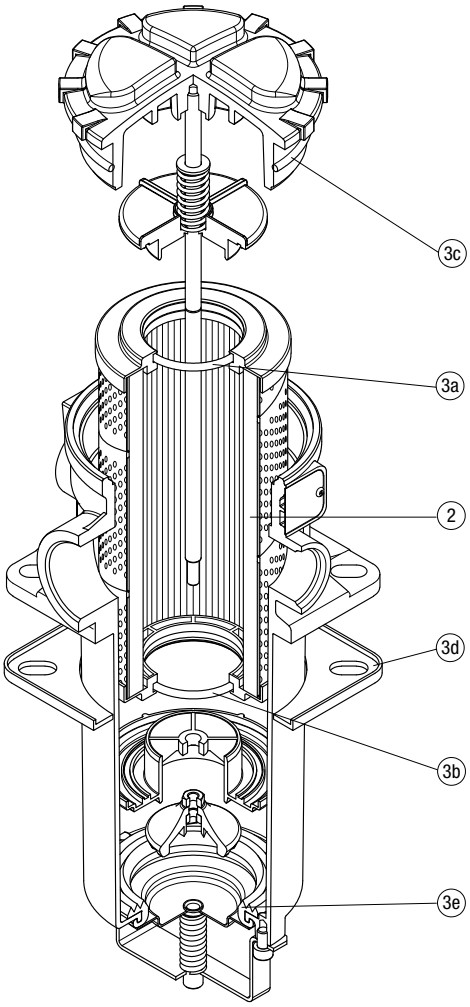

Item:	Q.ty: 1 pc. 2	Q.ty: 1 pc. 3 (3a ÷ 3e)	
Filter series	Filter element	Seal Kit code number NBR	FPM
SF2 250 - 350	See order table	02050586	02050587

SF2 500 series

Flow rate up to 700 l/min

SF2 500 GENERAL INFORMATION

Description

Suction filters

Flow rate up to 700 l/min

SF2 500 is a range of suction filters with integrated shut-off valve for protection of the downstream pump against the coarse contamination. They are placed below the minimum oil level, directly connected to the suction line of the pump.
They can be fitted on the side or below the tank, allowing a more flexible design of the tank.
The shut-off valve closes automatically when the cover is removed, allowing the filter element replacement without the fluid drop.

Available features:
- Flanged connections up to 4", for a maximum flow rate of 800 l/min
- Optional hose fitting installed, to connect the suction line without the use of flanges
- Magnetic filter, to hold the ferrous particles
- Plastic and metal handle, to close the shut-off valve before the cover removal
- Electrical switch, to signal the closed shut-off valve
- Visual, electrical and electronic clogging indicators

Common application:
Industrial equipment

Technical data

Filter housing materials
- Housing:
  Anodized Aluminium
  Steel (chemical heat treatment): only for SF2 535 - 540

- Cover:
  Anodized Aluminium
  Steel (chemical heat treatment): only for SF2 535 - 540

- Optional flange:
  Anodized Aluminium

Elements
Fluid flow through the filter element from IN to OUT

Seals
- Standard NBR series A
- Optional FPM series V

Temperature
From -25 °C to +110 °C

Note
SF2 500 filters mounting, see the drawings on page 51 and following

Weights [kg]

Filter series	
SF2 500-501	4.0
SF2 503	4.8
SF2 504	5.8
SF2 505	6.0
SF2 510	7.2
SF2 535	17
SF2 540	19

FILTER ASSEMBLY SIZING
Flow rates [l/min]

Filter series	Filter element design - N Series	
	M25	M60 M90 M250
SF2 500	219	234
SF2 501	259	282
SF2 503	325	390
SF2 504	484	543
SF2 505	199	221
SF2 510	259	282
SF2 535	439	479
SF2 540	644	688

Maximum flow rate for a complete suction filter with a pressure drop Δp = 0.08 bar.
The reference fluid has a kinematic viscosity of 30 mm^2/s (cSt) and a density of 0.86 kg/dm^3.
For different pressure drop or fluid viscosity we recommend to use our selection software available on www.mpfiltri.com.
You can also calculate the right size using the formulas present on the FILTER SIZING paragraph at the beginning of the full catalogue or at the beginning of the filter family brochure.
Please, contact our Sales Department for further additional information.

Filter series	
SF2 500	•

Hydraulic symbols

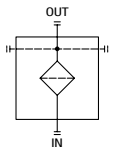

Pressure drop
Filter housings Δp pressure drop

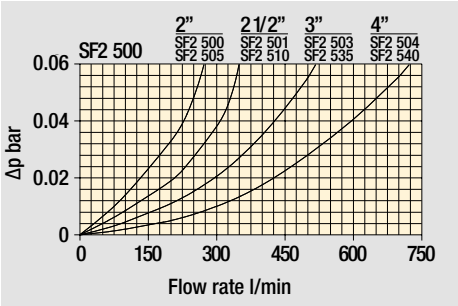

Filter element Δp pressure drop

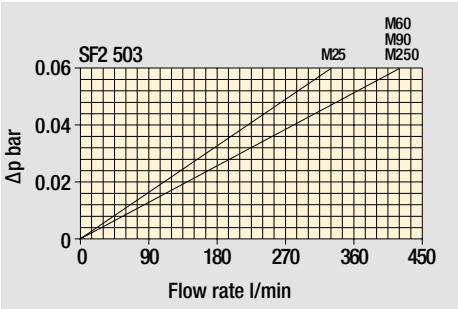

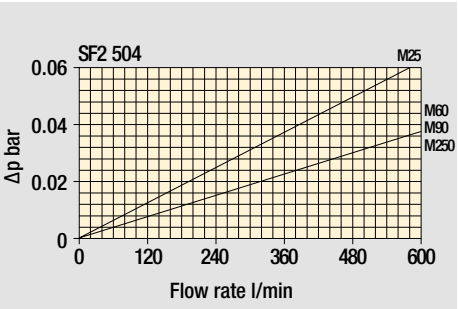

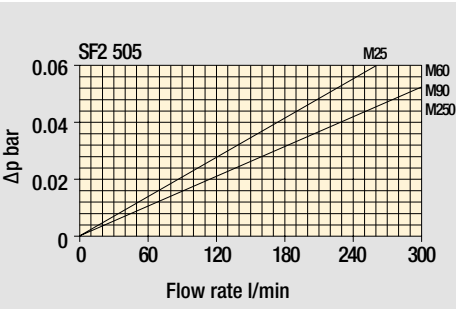

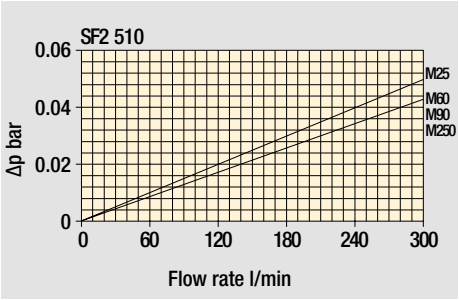

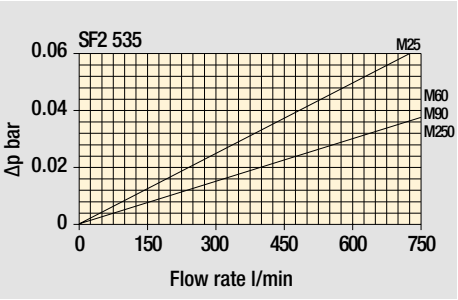

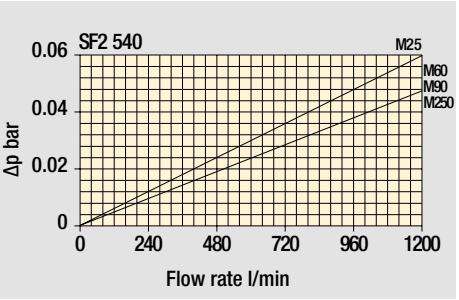

The curves are plotted using mineral oil with density of 0.86 kg/dm^3 in compliance with ISO 3968. Δp varies proportionally with density.

SF2 500 SF2500 - SF2501 - SF2503 - SF2504 - SF2505 - SF2510 - SF2535 - SF2540

Designation & Ordering code

COMPLETE FILTER

Configuration example 1:	SF2500	W	F1	D	M25	P01
Configuration example 2:	SF2535	A	F2	C	M60	P01

Series and size

SF2500
SF2501
SF2503
SF2504
SF2505
SF2510
SF2535
SF2540

Seals and treatments		Filtration rating Mxx
A	NBR	•
V	FPM	•
W	NBR compatible with fluids HFA-HFB-HFC	•
Z	FPM compatible with fluids HFA-HFB-HFC	•

Connections

	SF2500 - SF2505	SF2501 - SF2510	SF2503 - SF2535	SF2504 - SF2540
F1	2” SAE 3000 psi/M	2 1/2” SAE 3000 psi/M	3” SAE 3000 psi/M	4” SAE 3000 psi/M
F2	2” SAE 3000 psi/UNC	2 1/2” SAE 3000 psi/UNC	3” SAE 3000 psi/UNC	4” SAE 3000 psi/UNC
C1	Hose barb 2”/M	Hose barb 2 1/2”/M	Hose barb 3”/M	Hose barb 4”/M

Microswitch and Handweel

		SF2500 - SF2501	SF2503 - SF2504	SF2505 - SF2510	SF2535 - SF2540
S	Without microswitch, without handwheel	•	•	•	•
C	With microswitch, without handwheel			•	•
D	With microswitch, with Nylon handwheel	•	•		
K	With microswitch, with steel handwheel	•	•		
M	Without microswitch, with Nylon handwheel	•	•		

Filtration rating (filter media)

M25	Wire mesh 25 µm	**M90**	Wire mesh 90 µm
M60	Wire mesh 60 µm	**M250**	Wire mesh 250 µm

Execution

P01	MP Filtri standard
Pxx	Customized

FILTER ELEMENT

Configuration example 1:	SF510	M25	W	P01
Configuration example 2:	SF535	M60		P01

Element series and size

	SF2500	SF2501	SF2503	SF2504	SF2505	SF2510	SF2535	SF2540
SF503			•					
SF504				•				
SF505					•			
SF510	•	•				•		
SF535							•	
SF540								•

Filtration rating (filter media)

M25	Wire mesh 25 µm	**M90**	Wire mesh 90 µm
M60	Wire mesh 60 µm	**M250**	Wire mesh 250 µm

Seals and treatments		Filtration rating Mxx	Pxx
	Standard version	•	•
W	Compatible with fluids HFA-HFB-HFC	•	

Execution

P01	MP Filtri standard
Pxx	Customized

ACCESSORIES

Clogging indicators		page
VVA	Axial vacuum gauge	59
VVR	Radial vacuum gauge	59
VEA	Electrical vacuum indicator	58
VLA	Electrical / visual vacuum indicator	58

Dimensions

SF2500

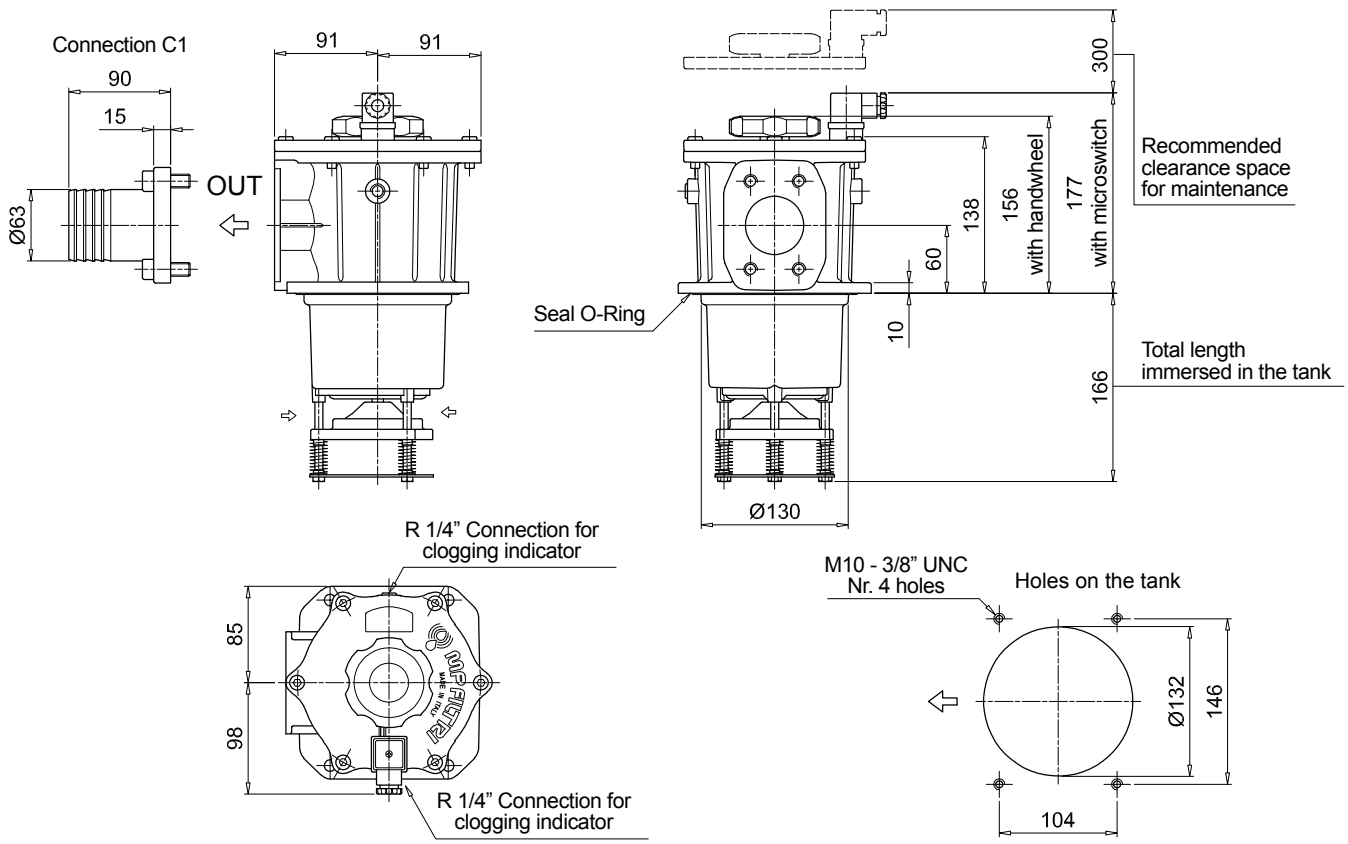

SF2501

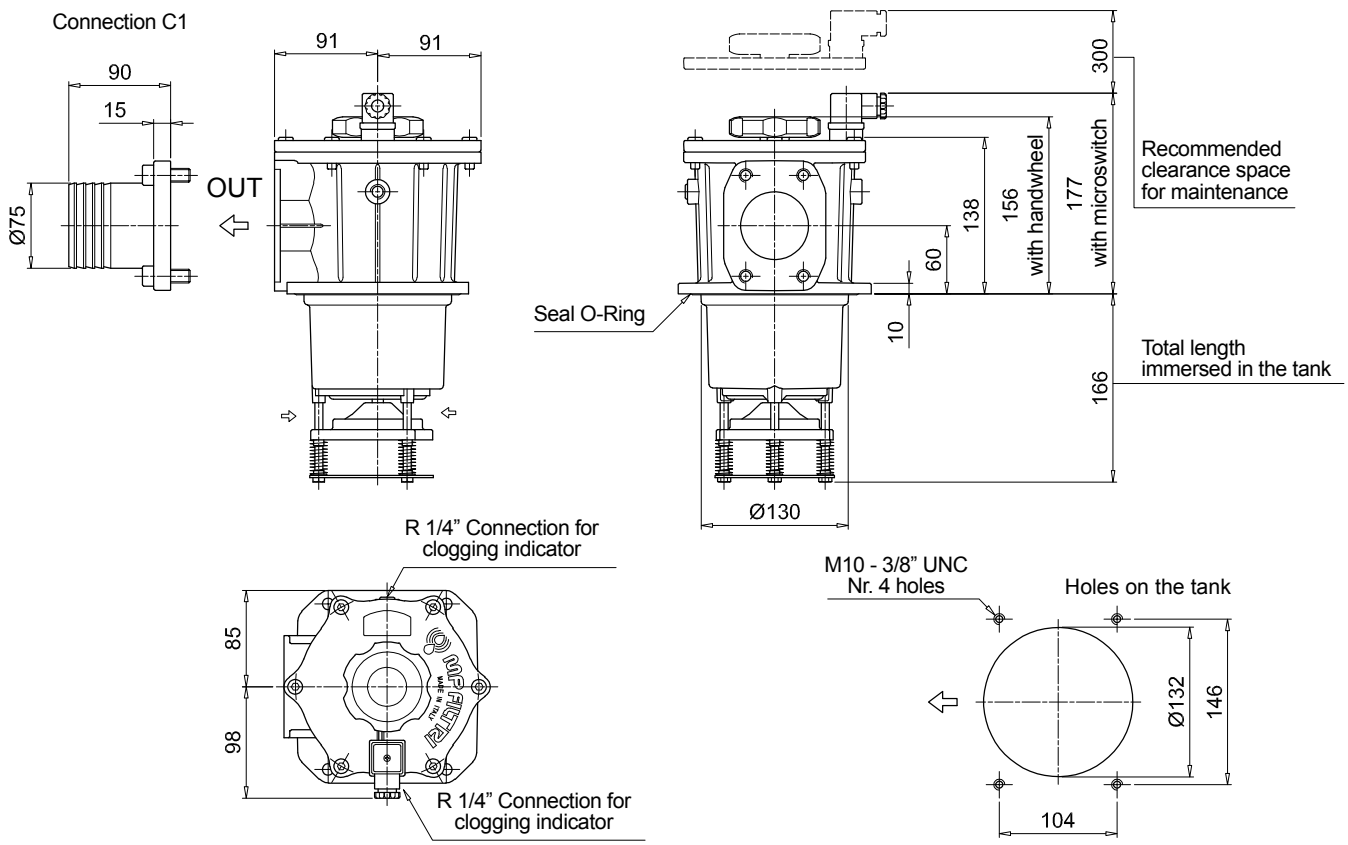

Dimensions

SF2503

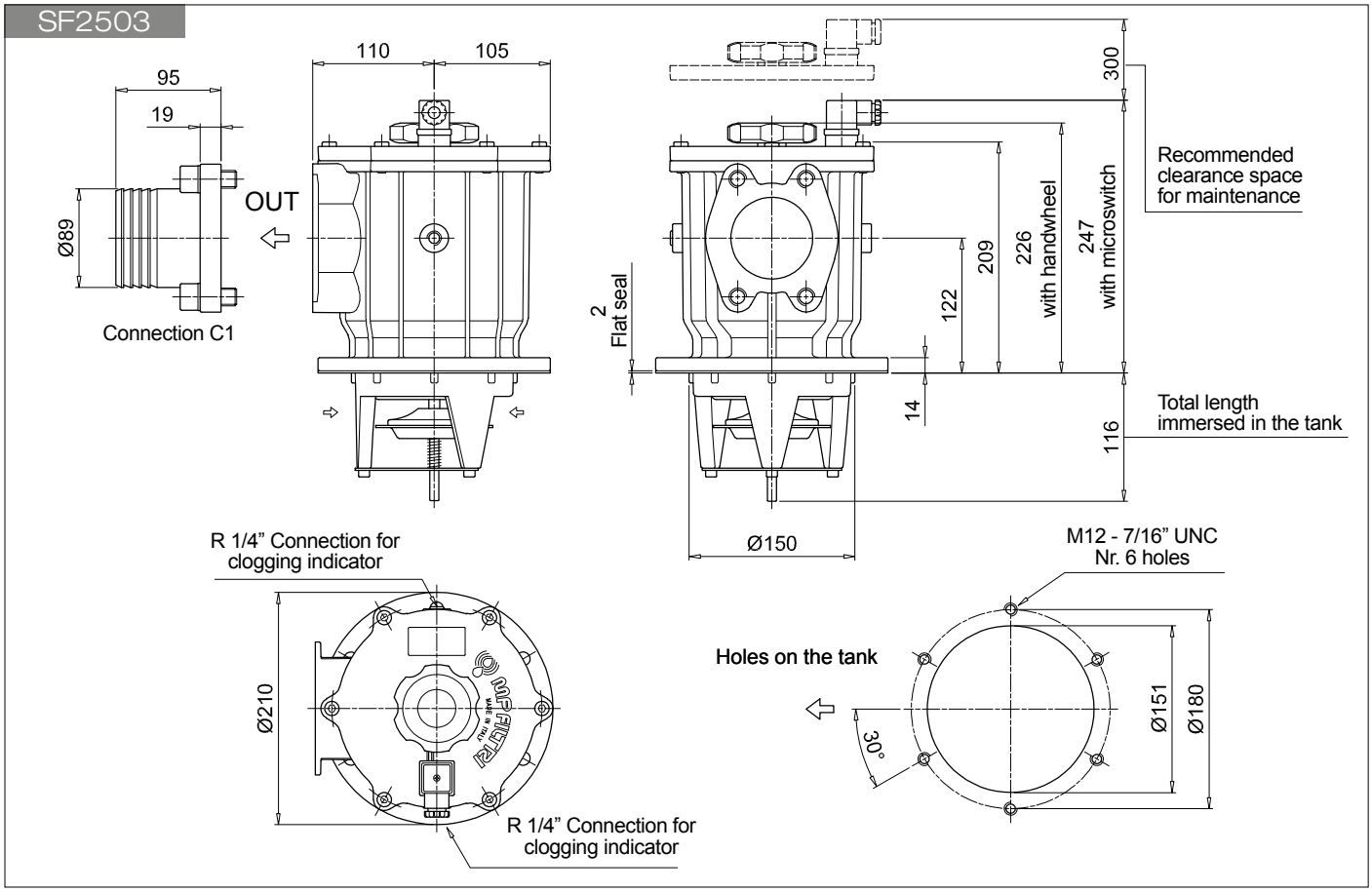

SF2504

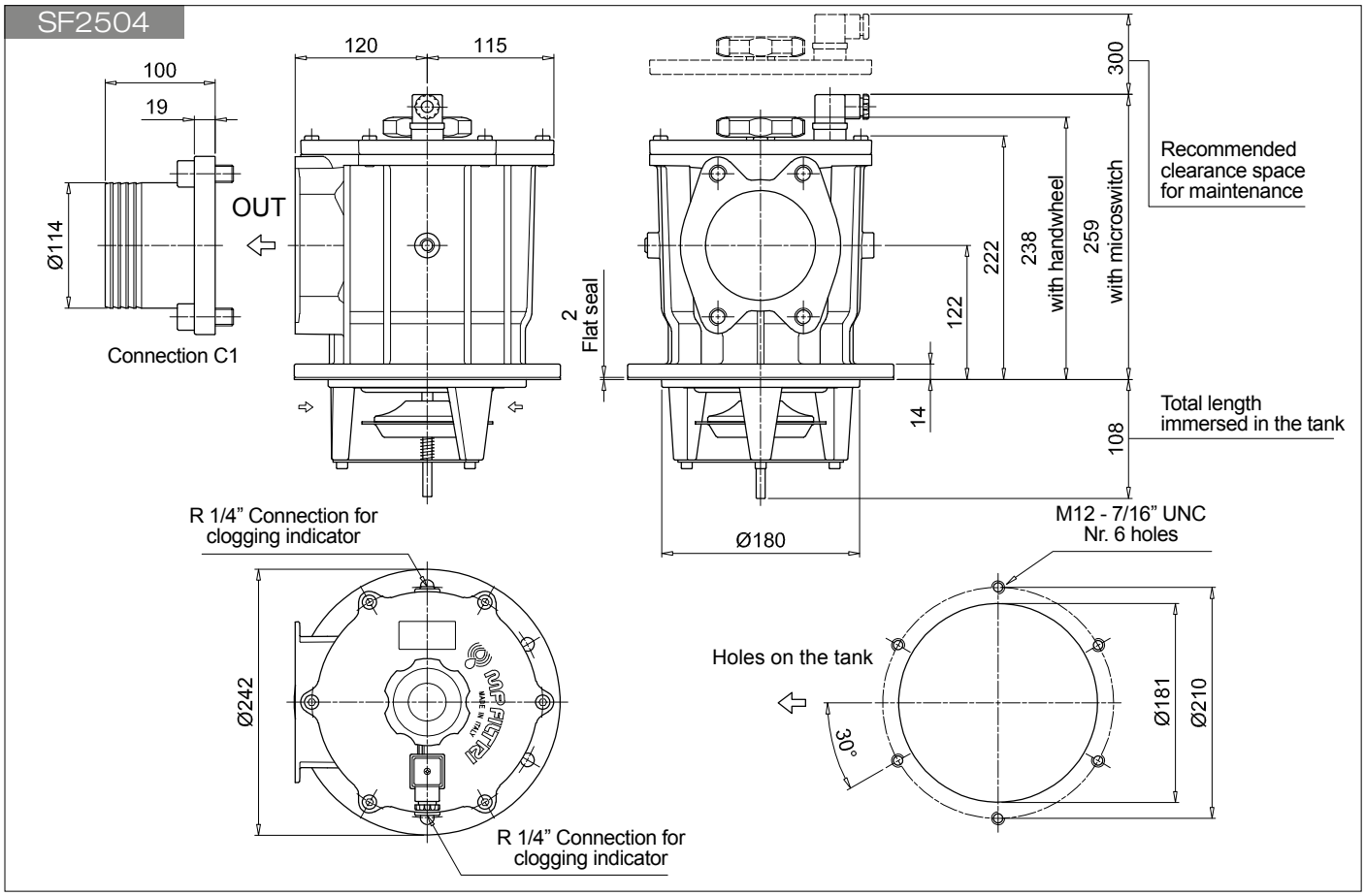

SF2505

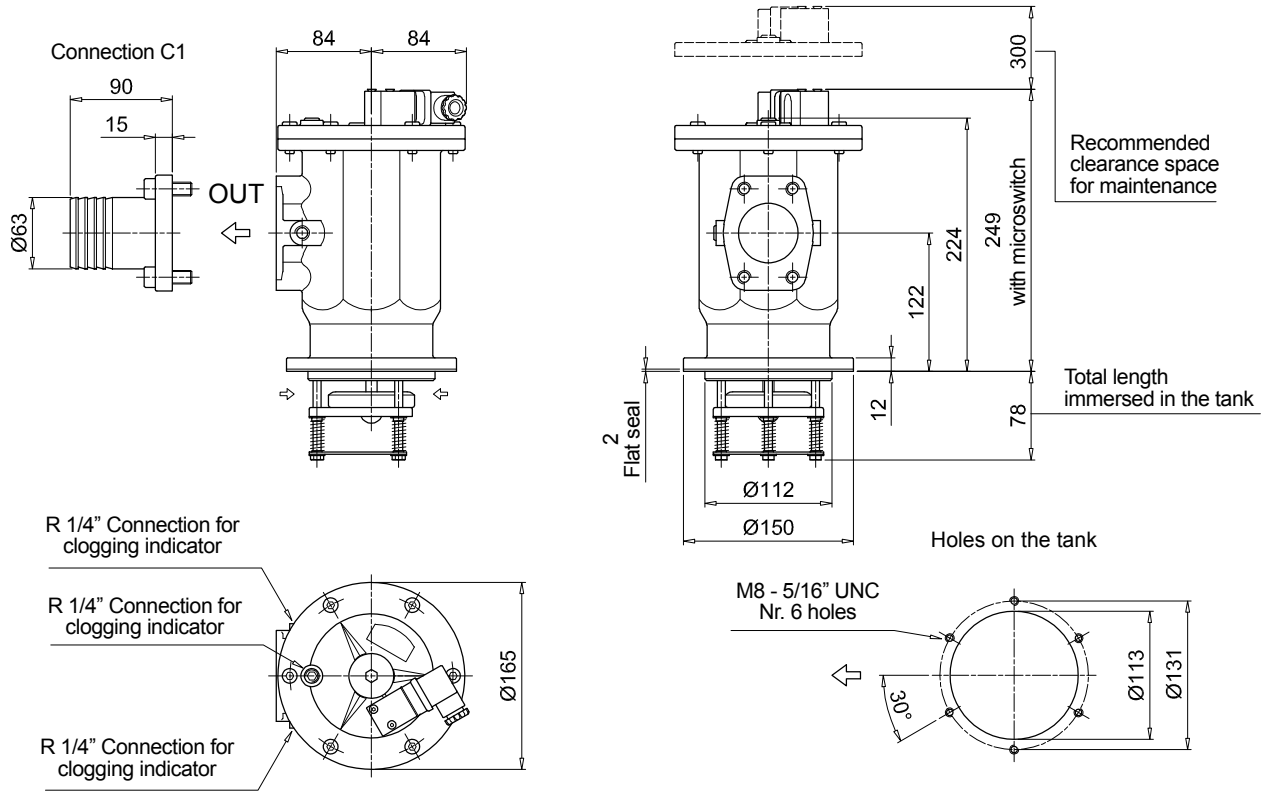

SF2510

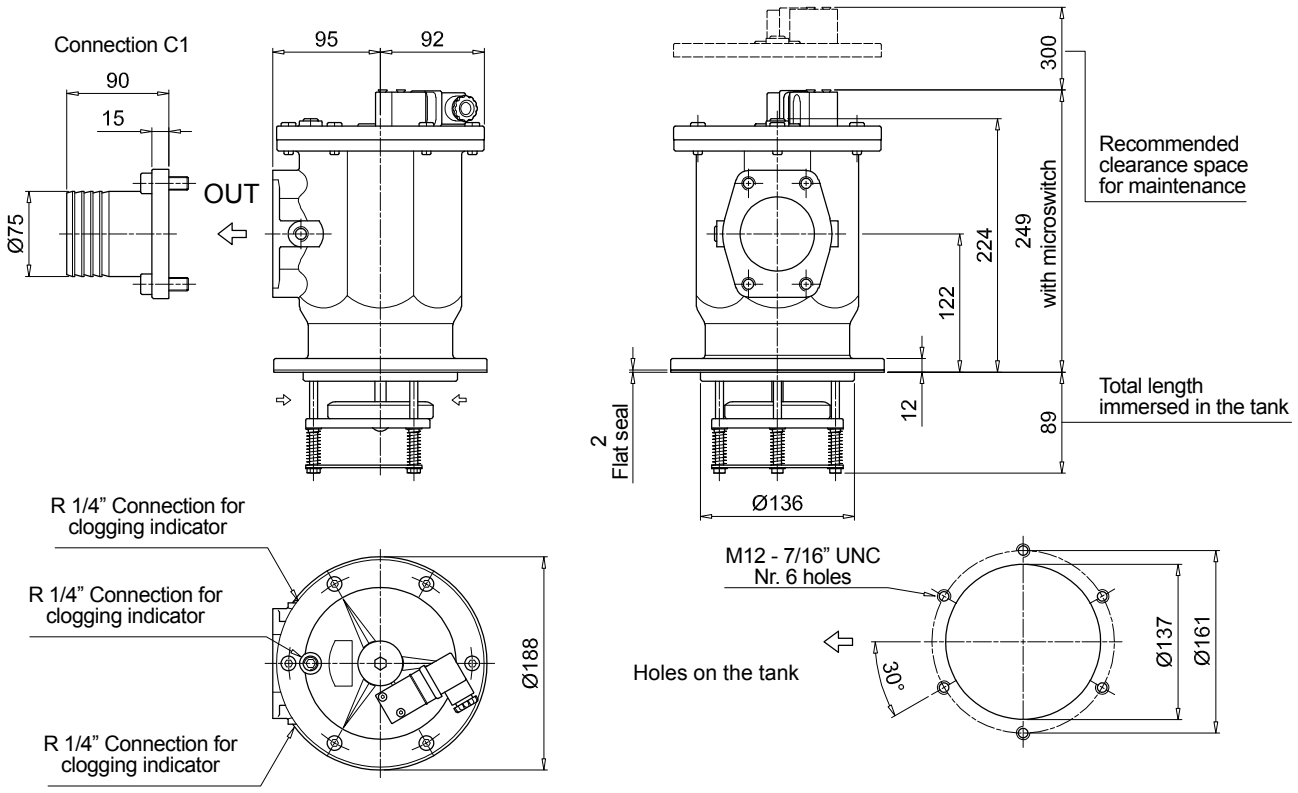

Dimensions

SF2535

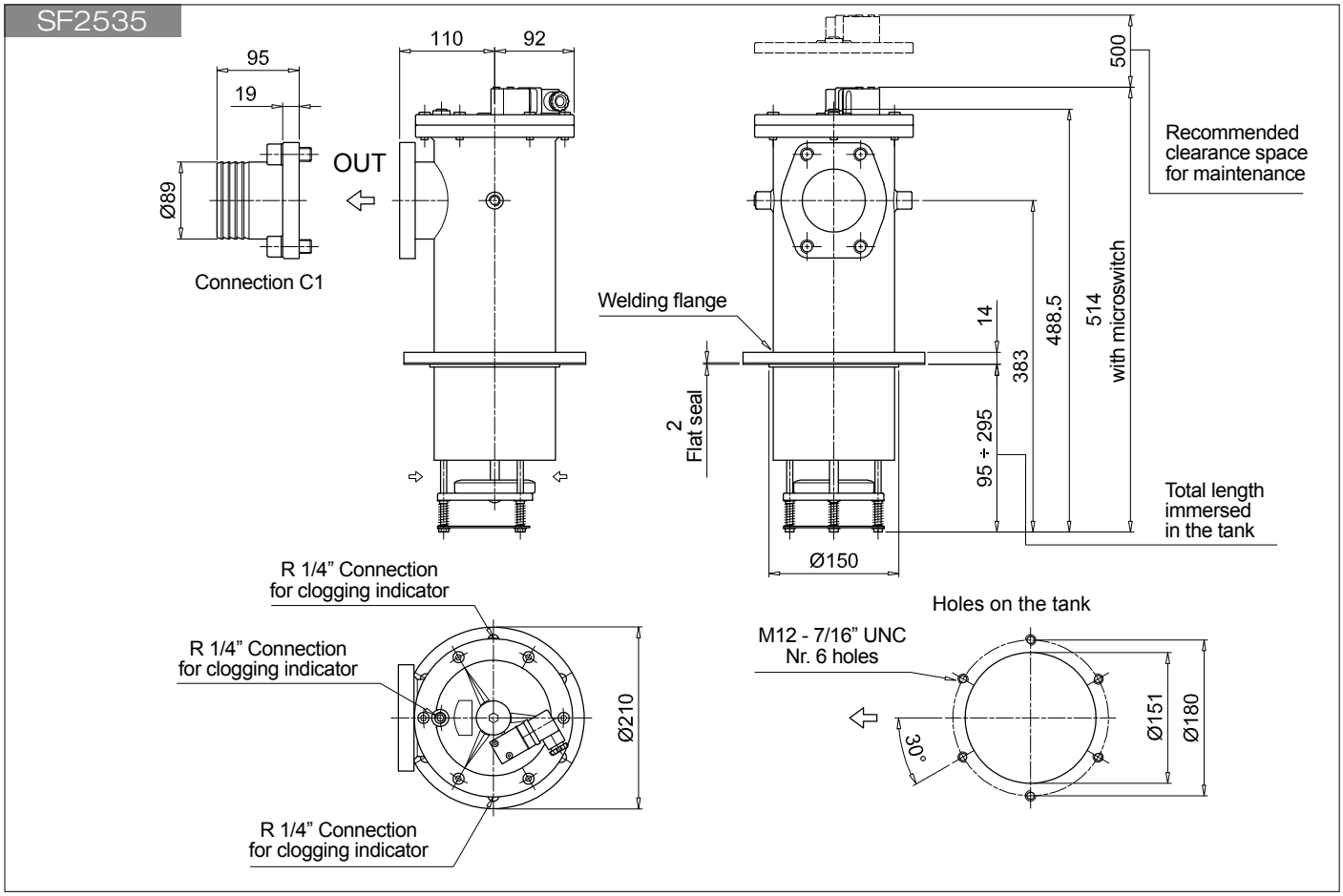

SF2540

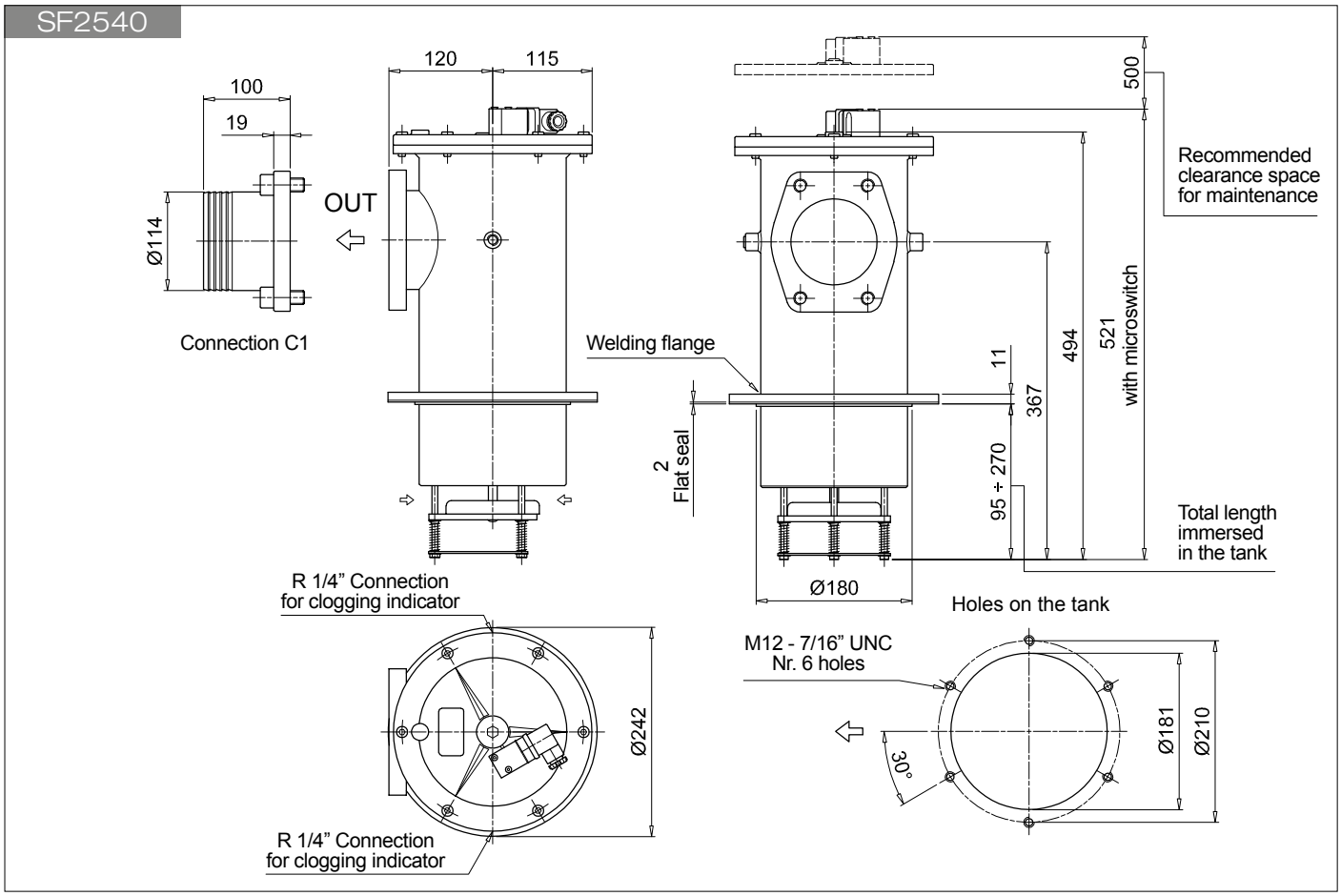

Order number for spare parts

SF2 500
SF2 501

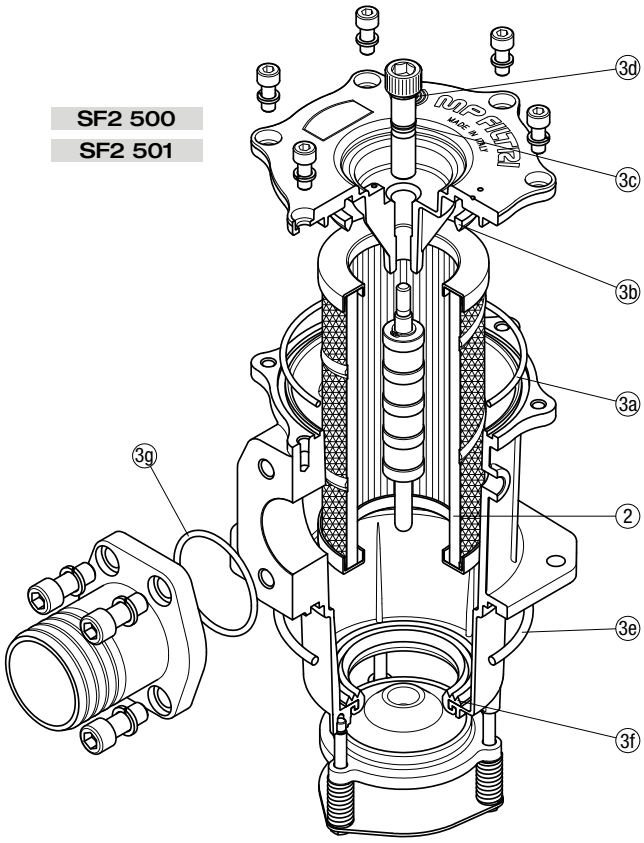

SF2 503
SF2 504

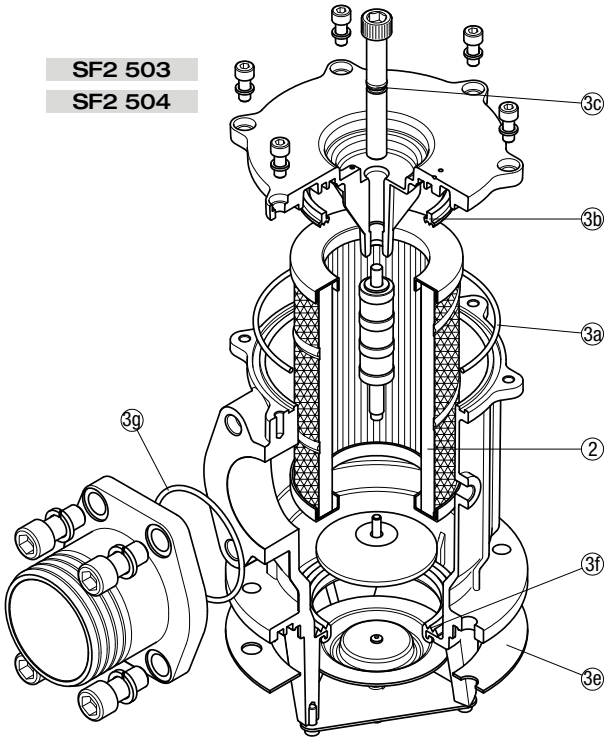

SF2 505
SF2 510
SF2 535
SF2 540

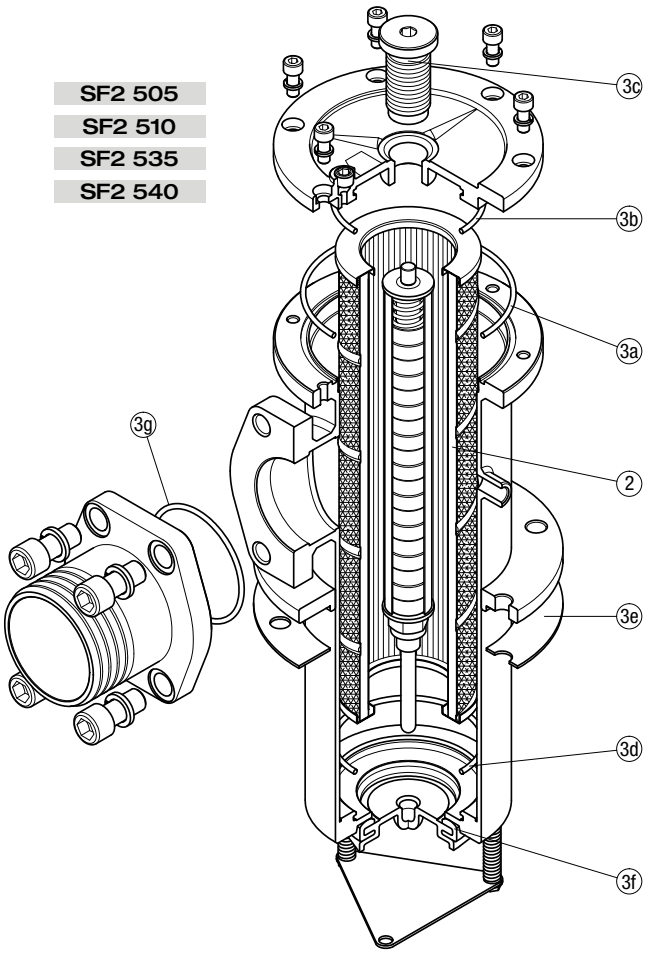

Item:	Q.ty: 1 pc. 2	Q.ty: 1 pc. 3 (3a ÷ 3g)	
Filter series	Filter element	Seal Kit code number NBR	FPM
SF2 500	See order table	02050141	02050142
SF2 501		02050143	02050144
SF2 503		02050070	02050071
SF2 504		02050072	02050073
SF2 505		02050043	02050044
SF2 510		02050045	02050046
SF2 535		02050051	02050052
SF2 540		02050053	02050054

Clogging indicators

Vacuum indicators

Introduction

Filter elements are efficient only if their Dirt Holding Capacity is fully exploited.
This is achieved by using filter housings equipped with clogging indicators.

These devices trip when the clogging of the filter element causes an increase in pressure drop across the filter element.

The indicator is set to alarm before the element becomes fully clogged.

MP Filtri can supply vacuum indicators with a visual, electrical or both signals.

Suitable indicator types

VACUUM INDICATORS

Vacuum indicators are used on the Suction line to check the efficiency of the filter element.
They measure the pressure downstream of the filter element.
Standard items are produced with R 1/4" EN 10226 connection.

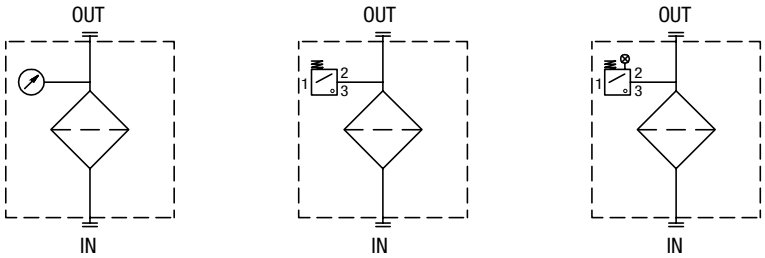

Quick reference guide

Filter series	Visual indicator	Electrical indicator	Electrical / Visual indicator
SF2 250 - 350 SF2 500 - 501 - 503 - 504 - 505 SF2 510 - 535 - 540	VVA16P01 VVR16P01	VEA21AA50P01	VLA21AA51P01 VLA21AA52P01 VLA21AA53P01 VLA21AA71P01

VACUUM INDICATORS

Dimensions

VE*50

Electrical Vacuum Indicator

R	Ordering code
EN 10226 - R1/4”	VE A 21 A A 50 P01

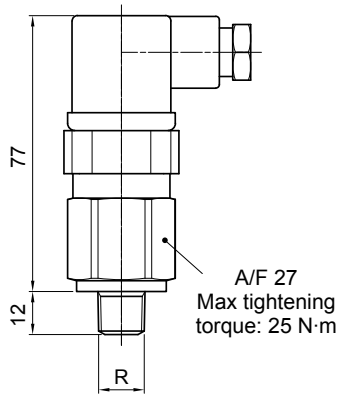

Hydraulic symbol

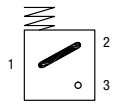

Electrical symbol

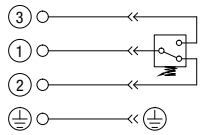

Materials
- Body: Brass
- Base: Black Nylon
- Contacts: Silver
- Seal: NBR

Technical data
- Vacuum setting: -0.21 bar ±10%
- Max working pressure: 10 bar
- Proof pressure: 15 bar
- Working temperature: From -25 °C to +80 °C
- Compatibility with fluids: Mineral oils, Synthetic fluids HFA, HFB, HFC according to ISO 2943
- Degree of protection: IP65 according to EN 60529

Electrical data
- Electrical connection: EN 175301-803
- Resistive load: 5 A / 14 Vdc; 4 A / 30 Vdc; 5 A / 125 Vac; 4 A / 250 Vac
- Available Atex product: II 1GD Ex ia IIC Tx Ex ia IIIC Tx°C X
- CE certification

VL*51 - VL*52 - VL*53

Electrical/Visual Vacuum Indicator

R	Ordering code
EN 10226 - R1/4”	VL A 21 A A xx P01

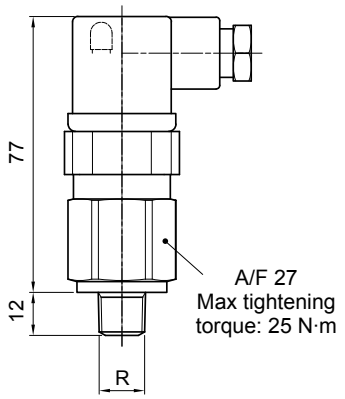

Hydraulic symbol

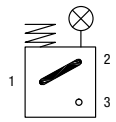

Electrical symbol

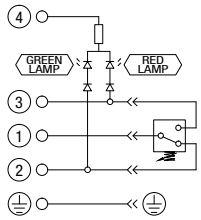

Materials
- Body: Brass
- Base: Transparent Nylon
- Contacts: Brass - Nylon
- Seal: NBR

Technical data
- Vacuum setting: -0.21 bar ±10%
- Max working pressure: 10 bar
- Proof pressure: 15 bar
- Working temperature: From -25 °C to +80 °C
- Compatibility with fluids: Mineral oils, Synthetic fluids HFA, HFB, HFC according to ISO 2943
- Degree of protection: IP65 according to EN 60529

Electrical data
- Electrical connection: EN 175301-803

- Type	51	52	53
- Lamps	24 Vdc	110 Vdc	230 Vac
- Resistive load:	1 A / 24 Vdc	1 A / 110 Vdc	1 A / 230 Vac

VL*71

Electrical/Visual Vacuum Indicator

Connections	Indicator code
EN 10226 - R1/4”	VL A 21 A A 71 P01

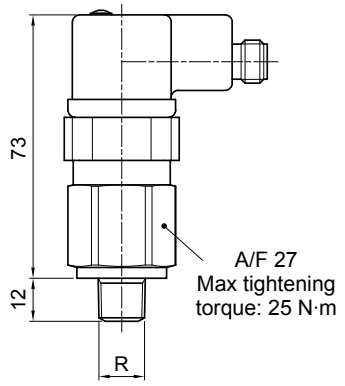

Hydraulic symbol

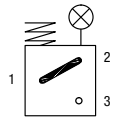

Electrical symbol

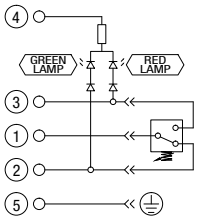

Materials
- Body: Brass
- Base: Black Nylon
- Contacts: Silver
- Seal: NBR

Technical data
- Vacuum setting: -0.21 bar ±10%
- Max working pressure: 10 bar
- Proof pressure: 15 bar
- Working temperature: From -25 °C to +80 °C
- Compatibility with fluids: Mineral oils, Synthetic fluids HFA, HFB, HFC according to ISO 2943
- Degree of protection: IP65 according to EN 60529

Electrical data
- Electrical connection: IEC 61076-2-101 D (M12)
- Lamps 24 Vdc
- Resistive load: 0.4 A / 24 Vdc

VVA

Axial Vacuum Gauge

R	Ordering code
EN 10226 - R1/4”	VV A 16 P01

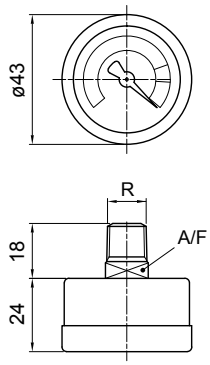

Hydraulic symbol

Dial scale

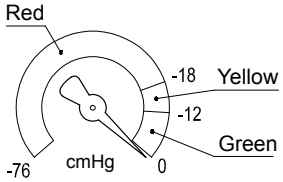

Conversion to SI units

[cmHg]	[bar]
-12	-0.16
-18	-0.24
-76	-1.01

Materials

- Case: Painted Steel
- Window: Transparent plastic
- Dial: Painted Steel
- Pointer: Painted Aluminium
- Pressure connection: Brass
- Pressure element: Bourdon tube Cu-alloy soft soldered

Technical data

- Max working pressure: Static: 7 bar
  Fluctuating: 6 bar
  Short time: 10 bar
- Working temperature: From -40 °C to +60 °C
- Compatibility with fluids: Mineral oils, Synthetic fluids
  HFA, HFB, HFC according to ISO 2943
- Accuracy: Class 2.5 according to EN 13190
- Degree of protection: IP31 according to EN 60529

VVR

Radial Vacuum Gauge

R	Ordering code
EN 10226 - R1/4”	VV R 16 P01

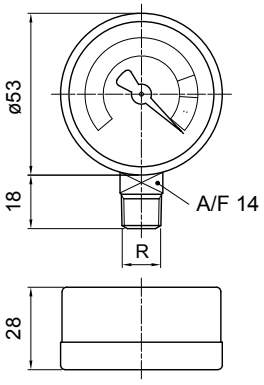

Hydraulic symbol

Dial scale

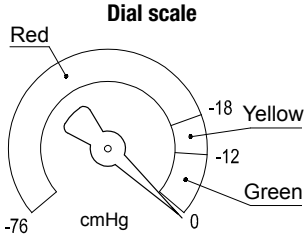

Conversion to SI units

[cmHg]	[bar]
-12	-0.16
-18	-0.24
-76	-1.01

Materials

- Case: Painted Steel
- Window: Transparent plastic
- Dial: Painted Steel
- Pointer: Painted Aluminium
- Pressure connection: Brass
- Pressure element: Bourdon tube Cu-alloy soft soldered

Technical data

- Max working pressure: Static: 7 bar
  Fluctuating: 6 bar
  Short time: 10 bar
- Working temperature: From -40 °C to +60 °C
- Compatibility with fluids: Mineral oils, Synthetic fluids
  HFA, HFB, HFC according to ISO 2943
- Accuracy: Class 2.5 according to EN 13190
- Degree of protection: IP31 according to EN 60529

DESIGNATION & ORDERING CODE

Configuration example 1:	VE	A	21	A	A	50	P01
Configuration example 2:	VL	A	21	A	A	71	P01
Configuration example 3:	VV	R	16				P01

Series

- **VE** Electrical vacuum indicator
- **VL** Electrical/Visual vacuum indicator
- **VV** Vacuum gauge

Type VE - VL

- **A** Connection EN 10226 - R1/4”

Type VV

- **A** Axial connection EN 10226 - R1/4”
- **R** Radial connection EN 10226 - R1/4”

Vacuum setting	VE	VL	VV
16 -0.16 bar			•
21 -0.21 bar	•	•	

Seals	VE	VL	VV
A NBR	•	•	

Thermostat	VE	VL	VV
A Without	•	•	

Electrical connections	VE	VL	VV
50 Connection EN 175301-803	•		
51 Connection EN 175301-803, transparent base with lamps 24 Vdc		•	
52 Connection EN 175301-803, transparent base with lamps 110 Vdc		•	
53 Connection EN 175301-803, transparent base with lamps 230 Vdc		•	
71 Connection IEC 61076-2-101 D (M12), black base with lamps 24 Vdc		•	

Option

- **P01** MP Filtri standard
- **Pxx** Customized

Clogging indicators are devices that check the life time of the filter elements. They measure the pressure drop through the filter element directly connected to the filter housing.
These devices trip when the clogging of the filter element causes a pressure drop increasing across the filter element.
Filter elements are efficient only if their Dirt Holding Capacity is fully exploited. This is achieved by using filter housings equipped with clogging indicators. The indicator is set to alarm before the element becomes fully clogged.

MP Filtri can supply indicators of the following designs:
- **Vacuum switches and gauges**
- **Pressure switches and gauges**
- **Differential pressure indicators**

These type of devices can be provided with a visual, electrical or both signals. The electronic differential pressure clogging indicator is also available. It provides both analogical 4-20 mA output and digital warning (75% of clogging) and alarm (clogging) outputs.

Clogging Indicators

Clogging indicators

Suitable indicator types

VACUUM INDICATORS
Vacuum indicators are used on the Suction line to check the efficiency of the filter element.
They measure the pressure downstream of the filter element.
Standard items are produced with R 1/4" EN 10226 connection.
Available products with R 1/8" EN 10226 to be fitted on MPS series.

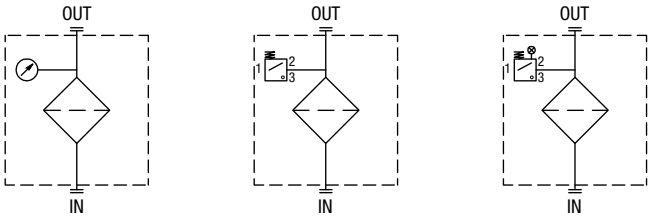

BAROMETRIC INDICATORS
Pressure indicators are used on the Return line to check the efficiency of the filter element.
They measure the pressure upstream of the filter element.
Standard items are produced with R 1/8" EN 10226 connection.

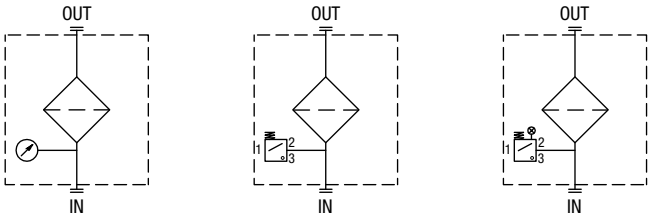

DIFFERENTIAL INDICATORS
Differential indicators are used on the Pressure line to check the efficiency of the filter element.
They measure the pressure upstream and downstream of the filter element (differential pressure).
Standard items are produced with special connection G 1/2" size.
Also available in Stainless Steel models.

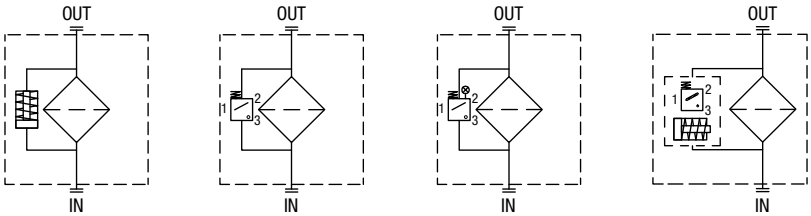

Filter family	Filter series		Electrical indicator	Electrical / Visual indicator	Electronic indicator	Visual indicator
SUCTION FILTERS	ELIXIR® SFEX060-080-110-160		VEB21AA50P01	VLB21AA51P01 VLB21AA52P01 VLB21AA53P01 VLB21AA71P01		VVB16P01 VVS16P01
	SF2 250 - 350 SF2 500 - 501 - 503 - 504 - 505 SF2 510 - 535 - 540		VEA21AA50P01	VLA21AA51P01 VLA21AA52P01 VLA21AA53P01 VLA21AA71P01		VVA16P01 VVR16P01
RETURN FILTERS	With bypass valve	ELIXIR® RFEX060-080-110-160	BEA15HA50P01 BEM15HA41P01	BLA15HA51P01 BLA15HA52P01 BLA15HA53P01 BLA15HA71P01		BVA14P01 BVR14P01 BVP15HP01 BVQ15HP01
	Without bypass valve	ELIXIR® RFEX060-080-110-160	BEA20HA50P01 BEM20HA41P01	BLA20HA51P01 BLA20HA52P01 BLA20HA53P01 BLA20HA71P01		BVA25P01 BVR25P01 BVP20HP01 BVQ20HP01
	With bypass valve	MPFX-MPTX-MPF-MPT - bypass 1.75 bar MPH - bypass 1.75 bar RF2250 - RF2350 - bypass 1.75 bar	BEA15HA50P01 BEM15HA41P01	BLA15HA51P01 BLA15HA52P01 BLA15HA53P01 BLA15HA71P01		BVA14P01 BVR14P01 BVP15HP01 BVQ15HP01
	With bypass valve	MPFX-MPTX-MPF-MPT - bypass 3 bar MPH - bypass 2.5 bar FRI 255 RF2250 - RF2350 - bypass 3 bar	BEA20HA50P01 BEM20HA41P01	BLA20HA51P01 BLA20HA52P01 BLA20HA53P01 BLA20HA71P01		BVA25P01 BVR25P01 BVP20HP01 BVQ20HP01
	MPLX FRI 025 - 040 - 100 - 250 - 630 - 850		DEA20xA50P01 DEM20xA10P01 DEM20xA20P01 DEM20xA30P01 DEM20xA35P01	DLA20xA51P01 DLA20xA52P01 DLA20xA71P01 DLE20xA50P01 DLE20xF50P01	DTA20xF70P01	DVA20xP01 DVM20xP01
RETURN / SUCTION FILTERS	Suction line	MRSX 116 - 165 - 166	VEB21AA50P01	VLB21AA51P01 VLB21AA52P01 VLB21AA53P01 VLB21AA71P01		VVB16P01 VVS16P01
	Return line	MRSX 116 - 165 - 166 LMP 124 MULTIPORT	BEA25HA50P01 BEM25HA41P01 BET25HF10P01 BET25HF30P01 BET25HF50P01	BLA25HA51P01 BLA25HA52P01 BLA25HA53P01 BLA25HA71P01		BVA25P01 BVR25P01 BVP20HP01 BVQ20HP01
SPIN-ON FILTERS	Suction line	MPS 050 - 070 - 100 - 150 MPS 200 - 250 - 300 - 350	VEB21AA50P01	VLB21AA51P01 VLB21AA52P01 VLB21AA53P01 VLB21AA71P01		VVB16P01 VVS16P01
	Return line	MPS 050 - 070 - 100 - 150 MPS 200 - 250 - 300 - 350	BEA15HA50P01 BEM15HA41P01	BLA15HA51P01 BLA15HA52P01 BLA15HA53P01 BLA15HA71P01		BVA14P01 BVR14P01 BVP20HP01 BVQ20HP01
	In-line	MPS 051 - 071 - 101 - 151 MPS 301 - 351 MSH 050 - 070 - 100 - 150	DEA12xA50P01 DEM12xAxxP01	DLA12xA51P01 DLA12xA52P01 DLA12xA71P01 DLE12xA50P01 DLE12xF50P01 DLE20xF50P01 DLE20xF50P01	DTA12xA70P01 DTA12xF70P01 DTA20xA70P01 DTA20xF70P01	DVA12xP01 DVM12xP01

QUICK REFERENCE GUIDE

Filter family	Filter series		Electrical indicator	Electrical / Visual indicator	Electronic indicator	Visual indicator	Hazardous area electronic indicator Ex
LOW & MEDIUM PRESSURE FILTERS	With bypass valve	ELIXIR® LFEX060-080-110-160	DES25HA10P01 DES25HA30P01 DES25HA80P01			DVS25HP01	
	Without bypass valve	ELIXIR® LFEX060-080-110-160	DES40HA10P01 DES40HA30P01 DES40HA80P01			DVS40HP01	
	With bypass valve	LMP 110 - 112 - 116 - 118 - 119 MULTIPORT LMP 120 - 122 - 123 MULTIPORT LMP 210 - 211 - LDP LMP 400 - 401 & 430 - 431 LMP 900 - 901 LMP 902 - 903 LMP 950 - 951 LMP 952 - 953 - 954 LMD 211 - 400 - 401 - 431 - 951 - LDD	DEA20xA50P01 DEM20xAxxP01	DLA20xA51P01 DLA20xA52P01 DLA20xA71P01 DLE20xA50P01 DLE20xF50P01	DTA20xF70P01	DVS25HP01 DVS40HP01 DVA20xP01 DVM20xP01	
	Without bypass valve	LMP 110 - 112 - 116 - 118 - 119 MULTIPORT LMP 120 - 122 - 123 MULTIPORT LMP 210 - 211 - LDP LMP 400 - 401 & 430 - 431 LMP 900 - 901 LMP 902 - 903 LMP 950 - 951 LMP 952 - 953 - 954 LMD 211 - 400 - 401 - 431 - 951 - LDD	DEA50xA50P01 DEM50xAxxP01	DLA50xA51P01 DLA50xA52P01 DLA50xA71P01 DLE50xA50P01 DLE50xF50P01	DTA50xF70P01	DVA50xP01 DVM50xP01	
HIGH PRESSURE FILTERS	With bypass valve	FMP 039 - 065 - 135 - 320 FHP 010 - 011 - 065 - 135 - 350 - 500 FMM 050 - 150 FHA 051 FHM 006 - 007 - 010 - 050 - 065 - 135 - 320 - 500 FHB 050 - 065 - 135 - 320 FHF 325 FHD 021 - 051 - 326 - 333	DEA50xA50P01 DEM50xAxxP01	DLA50xA51P01 DLA50xA52P01 DLA50xA71P01 DLE50xA50P01 DLE50xF50P01	DTA50xF70P01	DVA50xP01 DVM50xP01	DEH50xA48P01 DEH50xA49P01 DEH50xA70P01 DEH70xA48P01 DEH70xA49P01 DEH70xA70P01
	Without bypass valve	FMP 039 - 065 - 135 - 320 FHP 010 - 011 - 065 - 135 - 350 - 500 FMM 050 - 150 FHA 051 FHM 006 - 007 - 010 - 050 - 065 - 135 - 320 - 500 FHB 050 - 065 - 135 - 320 FHF 325 FHD 021 - 051 - 326 - 333	DEA70xA50P01 DEM70xAxxP01 DEA95xA50P01 DEM95xAxxP01	DLA70xA51P01 DLA70xA52P01 DLA70xA71P01 DLE70xA50P01 DLE70xF50P01 DLA95xA51P01 DLA95xA52P01 DLE95xA50P01 DLE95xF50P01	DTA70xF70P01 DTA95xF70P01	DVA70xP01 DVM70xP01 DVA95xP01 DVM95xP01	DEH50xA48P01 DEH50xA49P01 DEH50xA70P01 DEH70xA48P01 DEH70xA49P01 DEH70xA70P01
STAINLESS STEEL HIGH PRESSURE FILTERS	With bypass valve	FZH 010 - 011 - 039 FZP 039 - 136 FZX 011 FZB 039 FZM 039 FZD 051	DEX50xA50P01	DLX50xA51P01 DLX50xA52P01		DVX50xP01 DVY50xP01	DEH50xA48P01 DEH50xA49P01 DEH50xA70P01 DEH70xA48P01 DEH70xA49P01 DEH70xA70P01
	Without bypass valve	FZH 010 - 011 - 039 FZP 039 - 136 FZB 039 FZM 039 FZD 010 - 021 - 051	DEX70xA50P01 DEX95xA50P01	DLX70xA51P01 DLX70xA52P01 DLX95xA51P01		DVX70xP01 DVY70xP01 DVX95xP01 DVY95xP01	DEH50xA48P01 DEH50xA49P01 DEH50xA70P01 DEH70xA48P01 DEH70xA49P01 DEH70xA70P01

NOTES

All data, details and words contained in this publication are provided for information purposes only.
MP Filtri reserves the right to make modifications to the models and versions of the described products at any time for both technical and / or commercial reasons.
The colors and the pictures of the products are purely indicative.
Any reproduction, partial or total, of this document is strictly forbidden.
All rights are strictly reserved.

WORLDWIDE NETWORK

HEADQUARTERS

MP Filtri S.p.A.
Pessano con Bornago
Milano
Italy
sales@mpfiltri.com

BRANCH OFFICES

ITALFILTRI LLC
Moscow
Russia
mpfiltrirussia@yahoo.com

MP Filtri Canada Inc.
Concord, Ontario
Canada
sales@mpfiltricanada.com

MP Filtri France SAS
Lyon
AURA
France
sales@mpfiltrifrance.com

MP Filtri Germany GmbH
St. Ingbert
Germany
sales@mpfiltri.de

MP Filtri India Pvt. Ltd.
Bangalore
India
sales@mpfiltri.co.in

MP Filtri (Shanghai) Co., Ltd.
Shanghai
P.R. China
sales@mpfiltrishanghai.com

MP Filtri U.K. Ltd.
Bourton on the Water
Gloucestershire
United Kingdom
sales@mpfiltri.co.uk

MP Filtri U.S.A. Inc.
Quakertown, PA
U.S.A.
sales@mpfiltriusa.com

PASSION TO PERFORM

mpfiltri.com

CMPEN001G
EN - Rev. 09-2021